HORTZMAN-KRIZMAN/HUSQVARNA

HORTZMAN-KRIZMAN

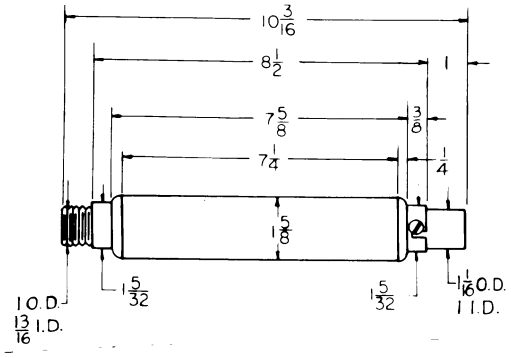

HE*

*** Type A thru E provide various inlet dimensions and shapes.**

HUSQVARNA

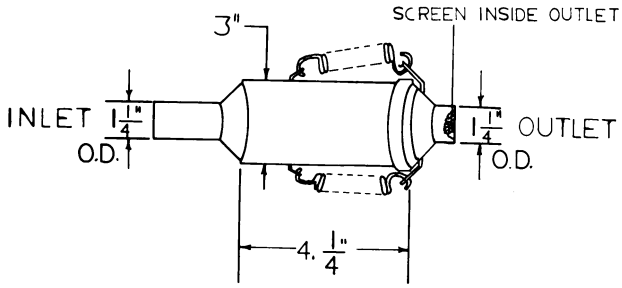

F15-1041

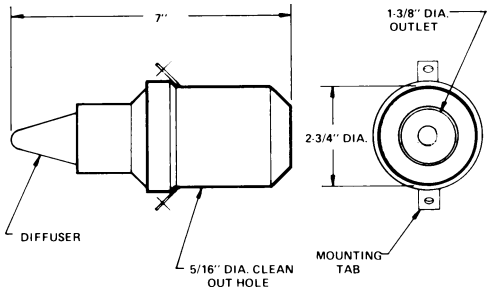

KS 500D

HUTCHINS FREFLO/IHC/J & R KRIZMAN

HUTCHINS FREFLO

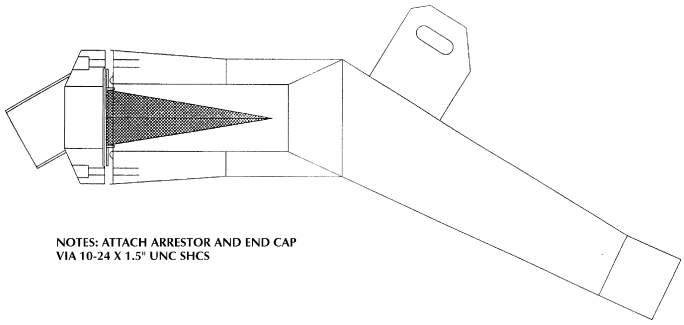

CYCLE GEAR #1

IHC

FOR IHC	70769C1	SEE NELSON	T-12818
FOR IHC	829640C91	SEE NELSON	T-13994
FOR IHC	561217C92	SEE NELSON	T-13651
FOR IHC	677817R91	SEE NELSON	T-10374
FOR IHC	563507C91	SEE NELSON	T-14005
FOR IHC	829176C91	SEE NELSON	T-14009

J & R KRIZMAN

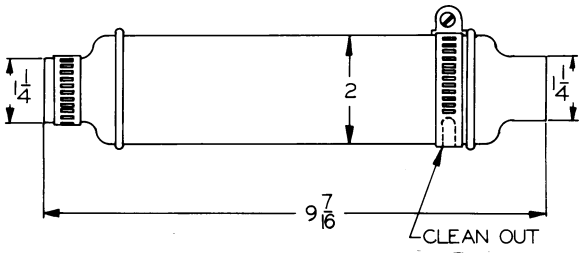

KS 350

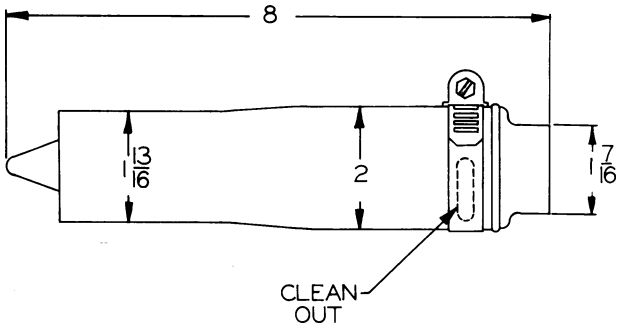

KS 500 A&C

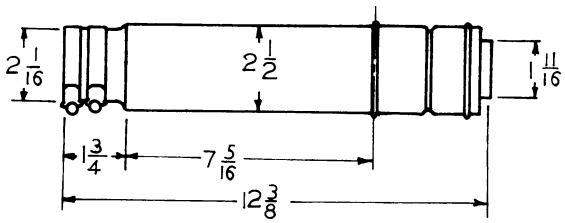

KS 650

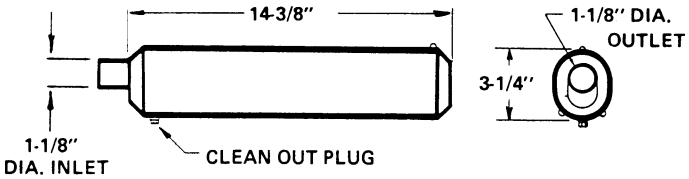

KS 650-O

J & R KRIZMAN *(continued)*

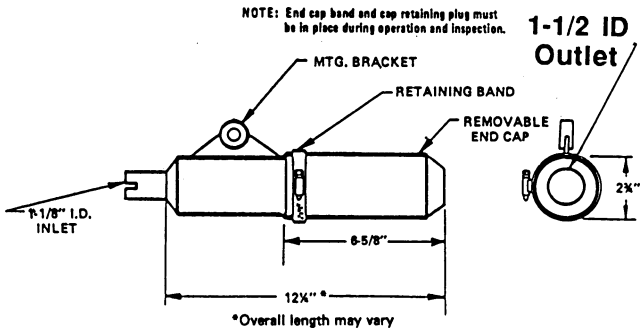

KS 650-A

KS 650-C—KS 650-A in oval muffler

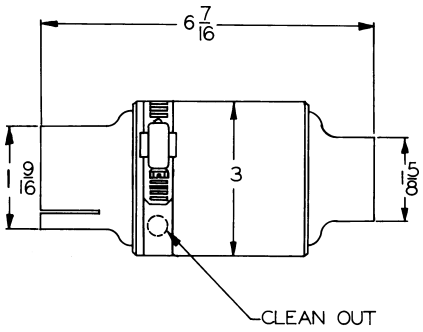

KS 650V

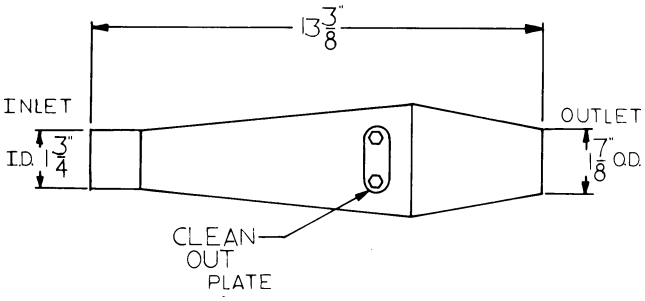

KS 800

J.G. MINTER & SONS/JOHN DEERE/KAWASAKI

J.G. MINTER & SONS

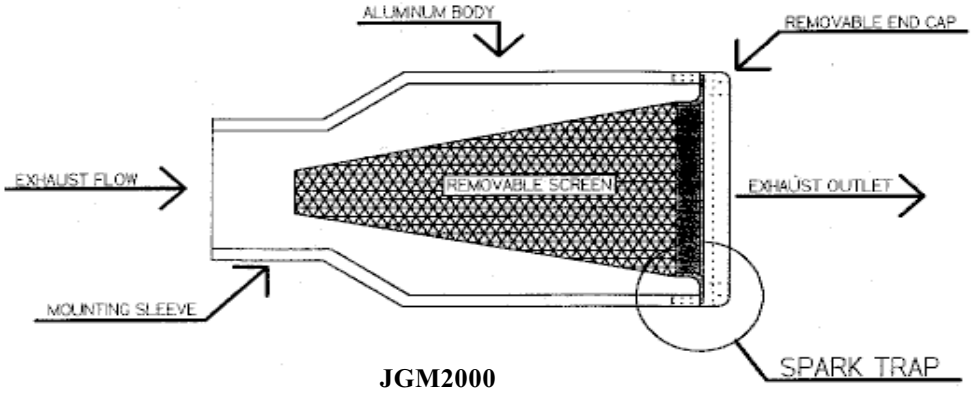

JGM2000

JOHN DEERE

FOR	**JOHN DEERE AH-75693**	**SEE NELSON T-10213**
FOR	**JOHN DEERE AH-75694**	**SEE NELSON T-10214**
FOR	**JOHN DEERE AH-75695**	**SEE NELSON T-10215**
FOR	**JOHN DEERE AH-80388**	**SEE NELSON T-11145**
FOR	**JOHN DEERE AH-84965**	**SEE NELSON T-12499**
FOR	**JOHN DEERE AH-87289**	**SEE NELSON T-11927**
FOR	**JOHN DEERE AT-32701**	**SEE NELSON T-10968**
FOR	**JOHN DEERE AT-33686**	**SEE NELSON T-9605**

KAWASAKI

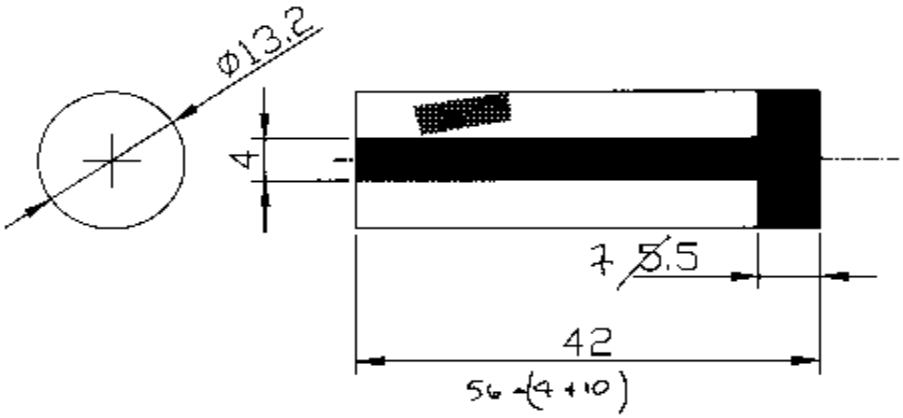

18077-2110

KAWASAKI *(continued)*

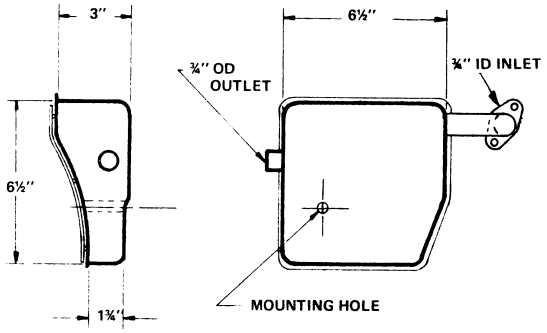

3951/2

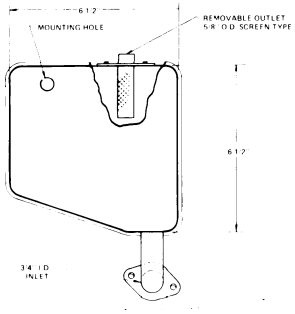

3951/2A

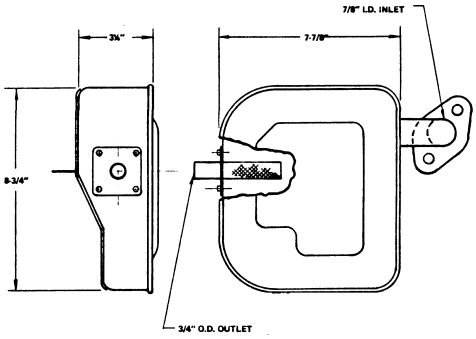

3964/5/6

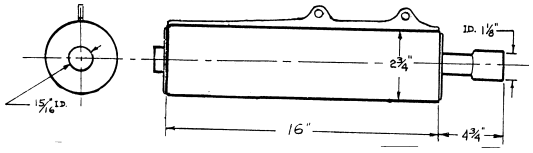

DX 200

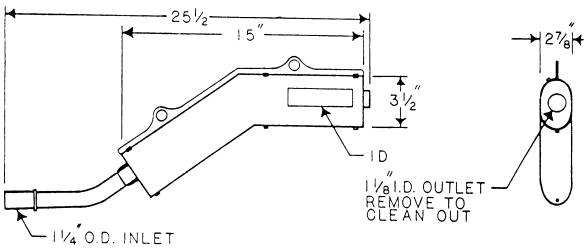

DX 250D

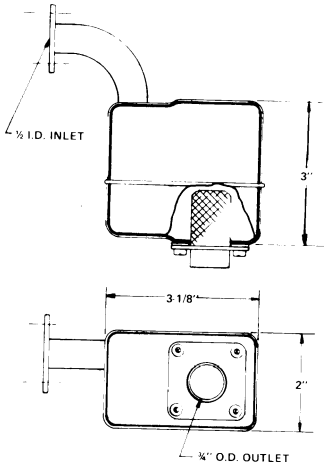

FA76D

KAWASAKI *(continued)*

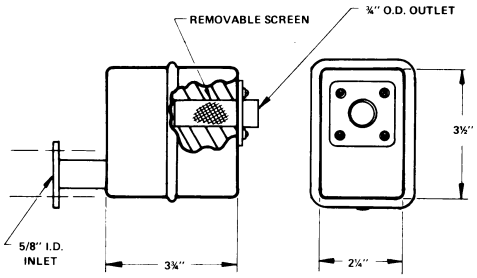

FA130D

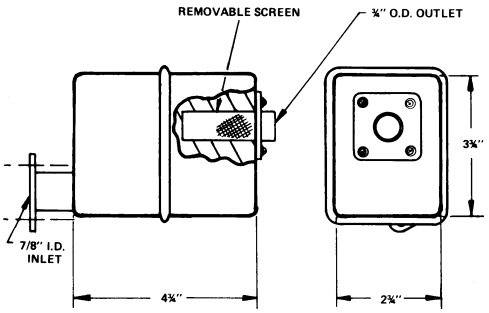

FA210D

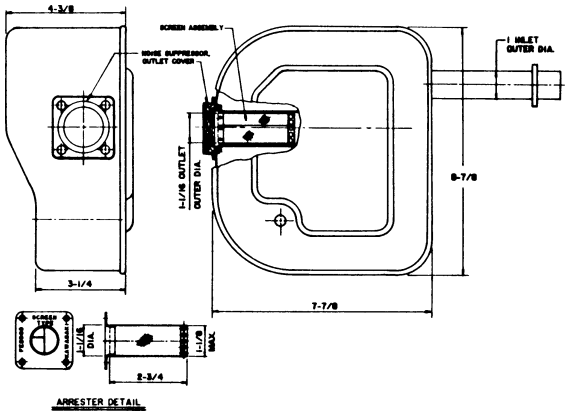

FE290D

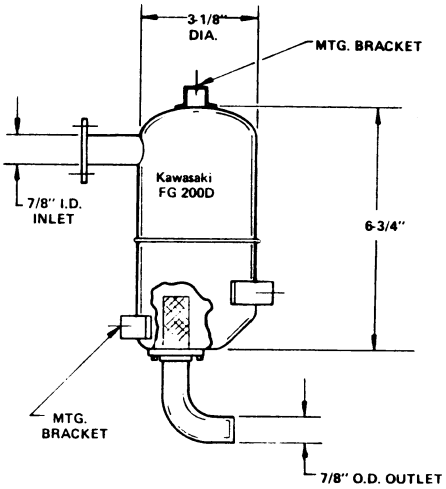

FG200D

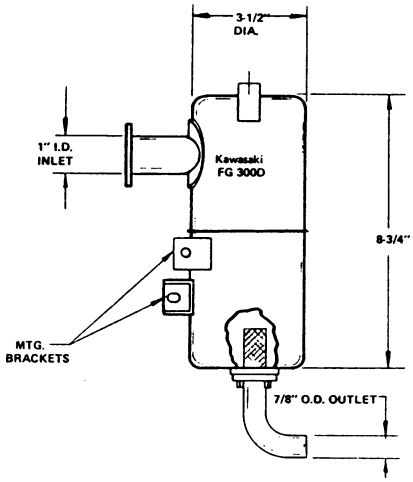

FG300D

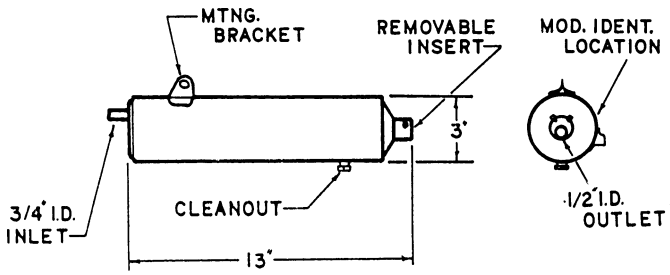

KD080N2

KAWASAKI *(continued)*

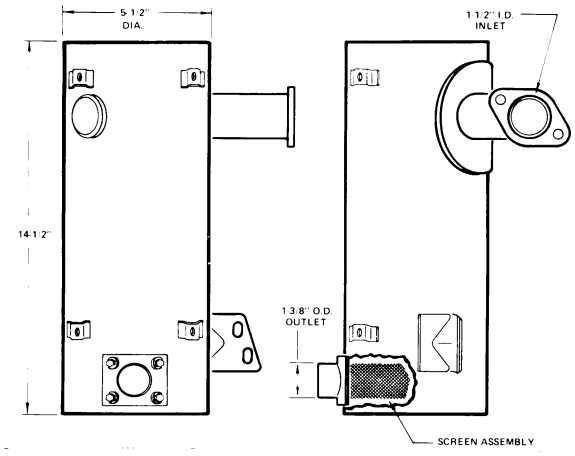

KF-150

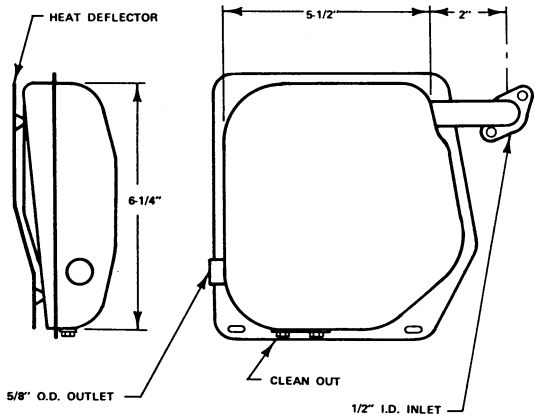

KG-550

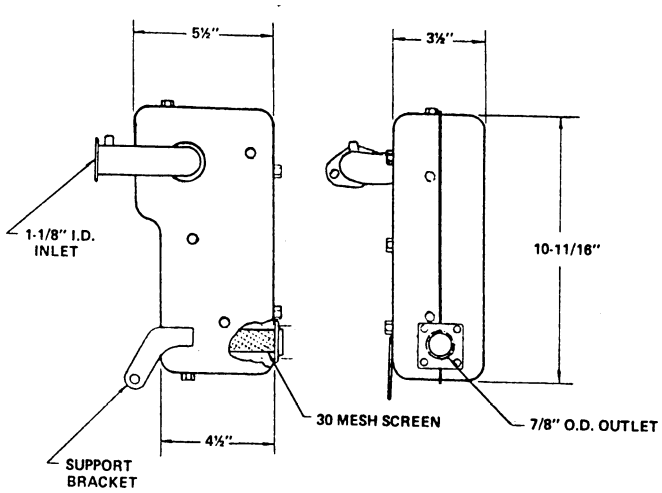

KG-4000

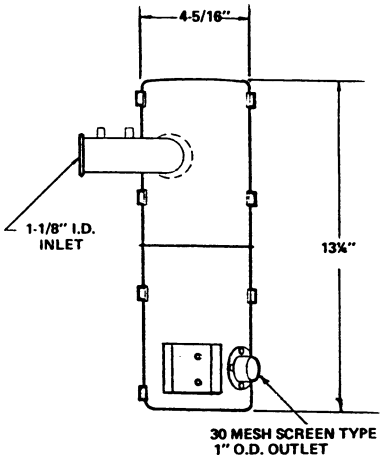

KG-5000

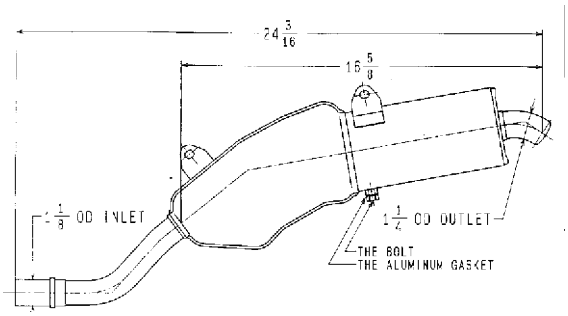

KHI DX200H

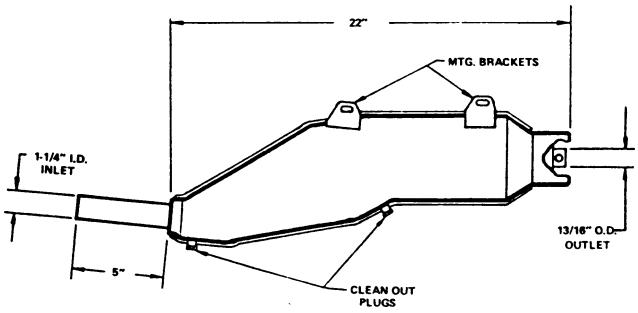

KHI KL250

KAWASAKI *(continued)*

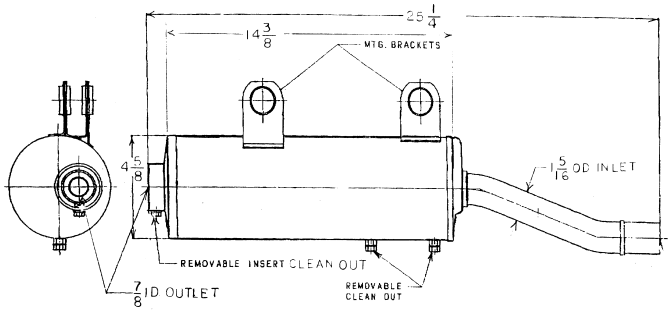

KHI LF 400

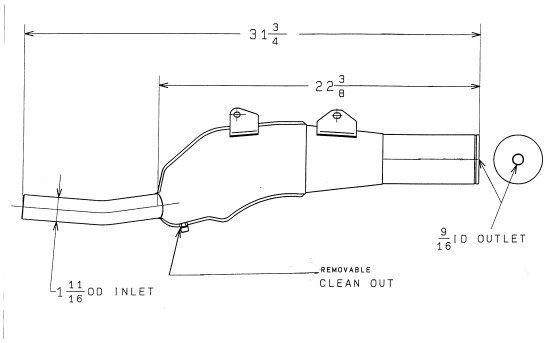

KHI LX 650

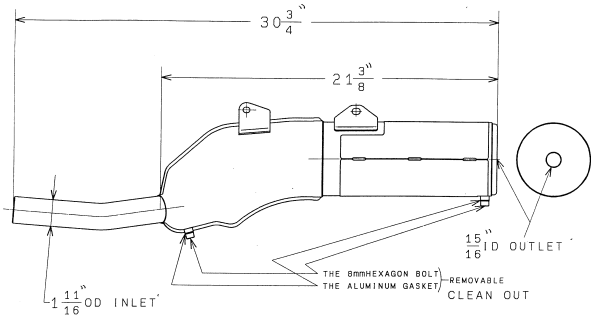

KHI LX 650C

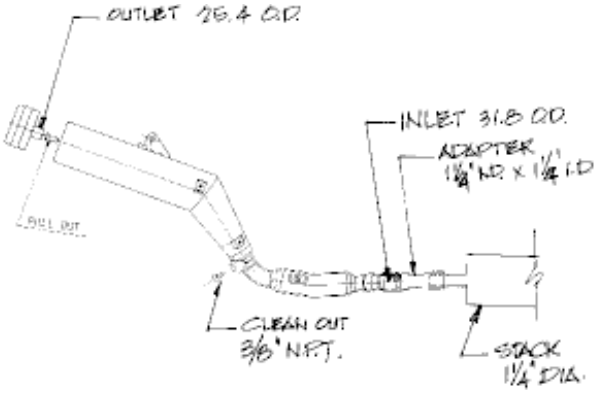

KL 250G

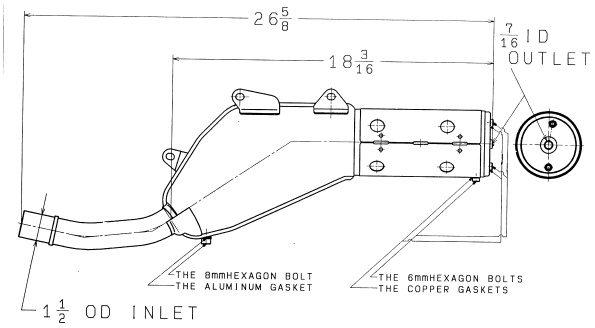

KLX 250D

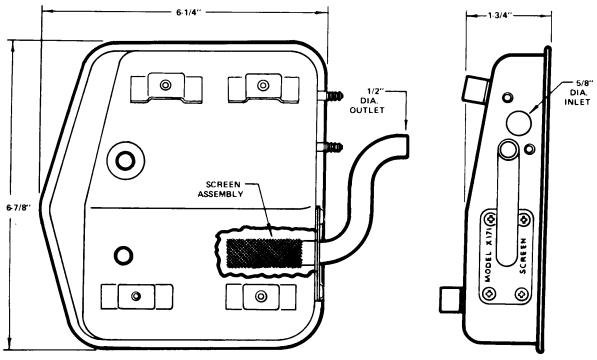

X171

KAWASAKI/KAWKAWASAKI-KRIZMAN

KAWASAKI *(continued)*

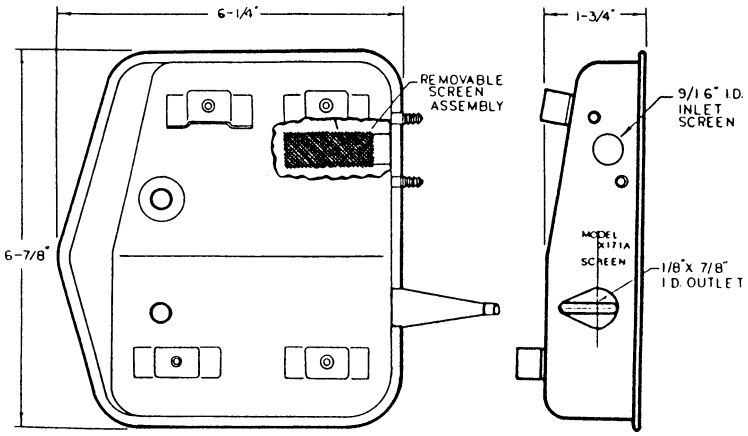

X171A

KAWASAKI-KRIZMAN

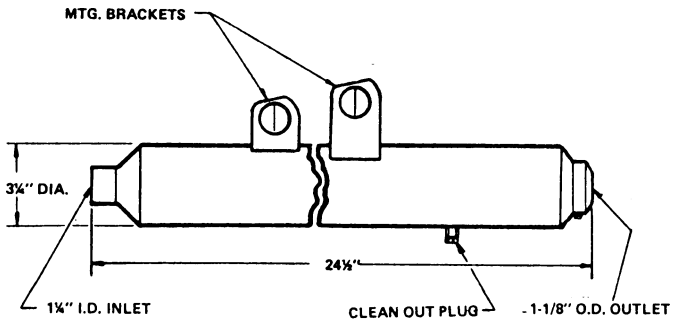

DX-250

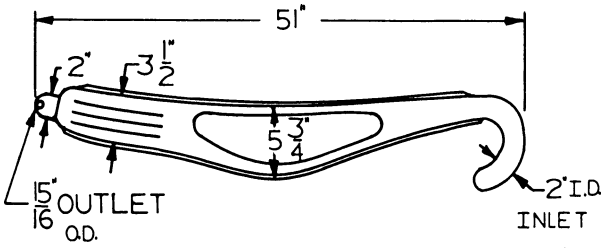

KD-400

KAWASAKI-KRIZMAN *(continued)*

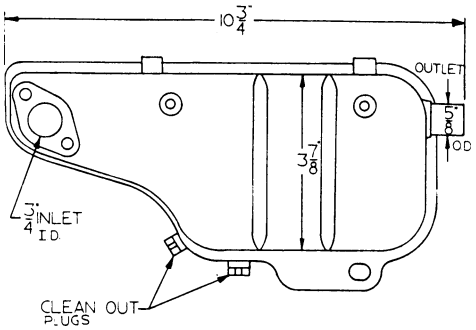

KG-250

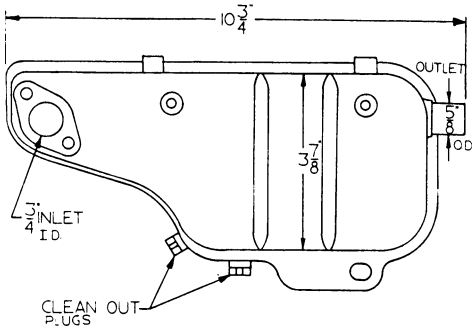

KG 250A

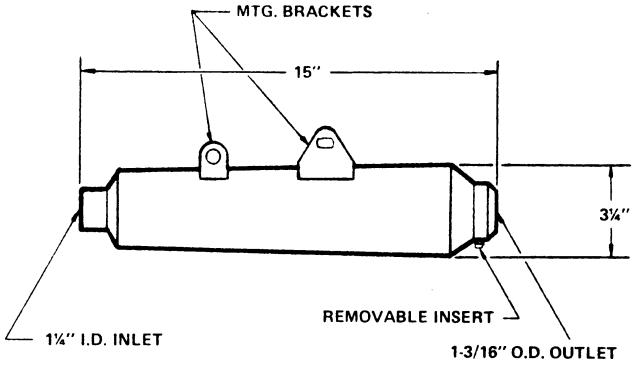

KG 250C

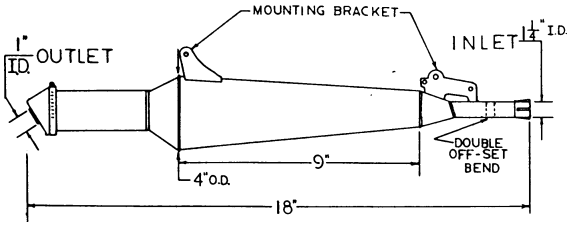

KHI-KE250B

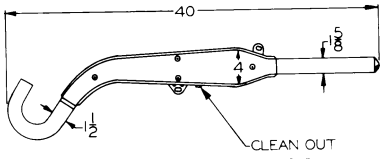

KS-250

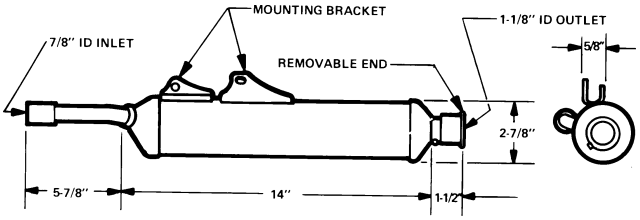

KS-350 KHI DX080A

KAWASAKI-KRIZMAN *(continued)*

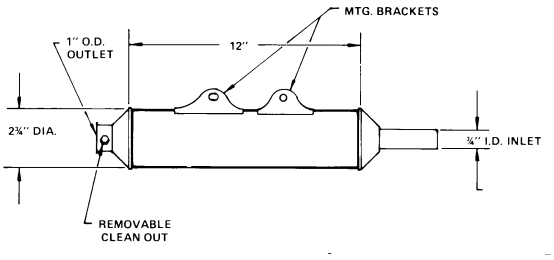

KS-350 KHI DX080C

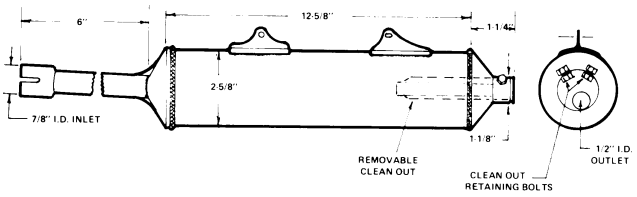

KS-350 KHI DX080C1

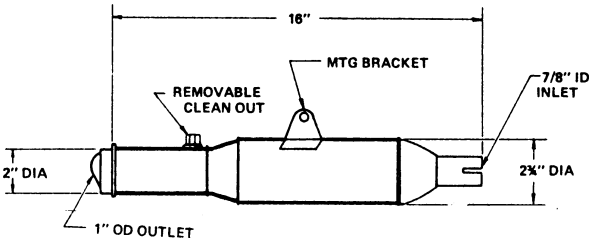

KS-500 KDX 175

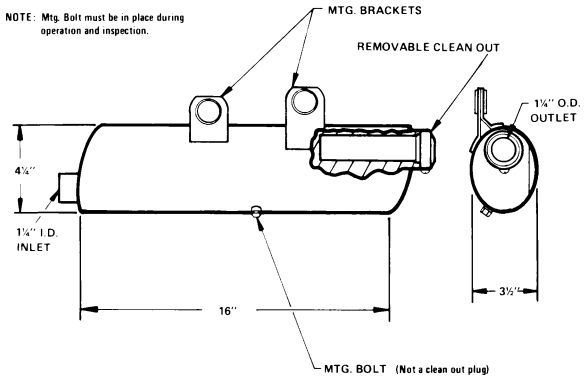

KS-500 KHI DX200A

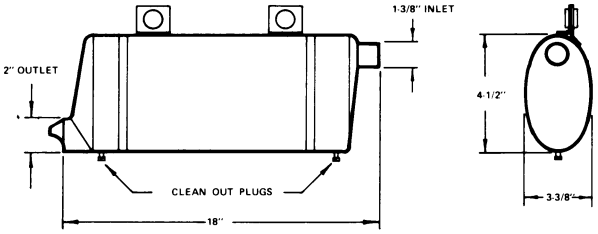

KS-500 KHI DX200C

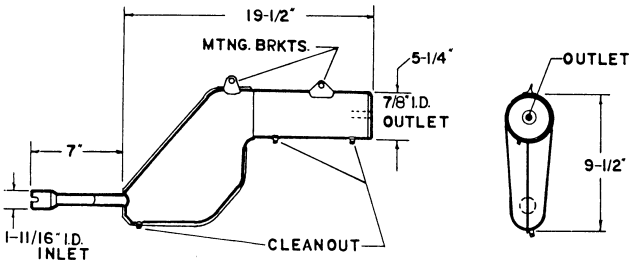

KS-500 KHI KL65

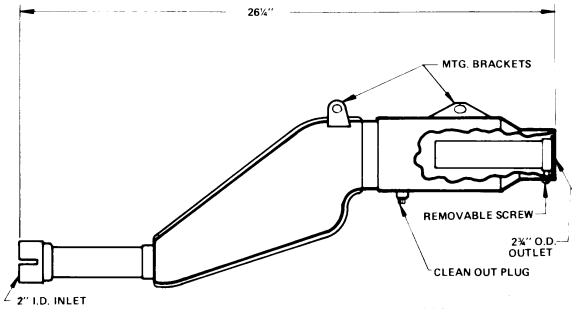

KS-500 KHI KL600

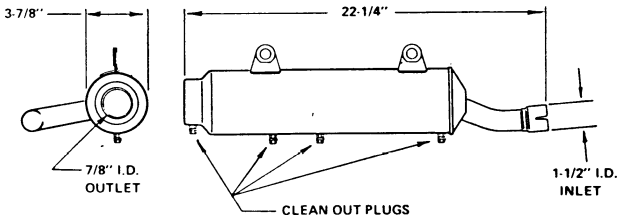

KS-500 KHI KSF250

KAWASAKI-KRIZMAN *(continued)*

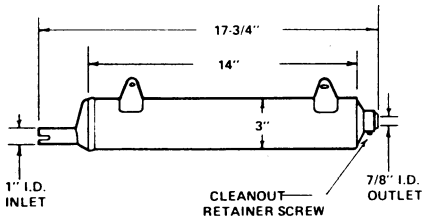

KS-500 KHI LF110

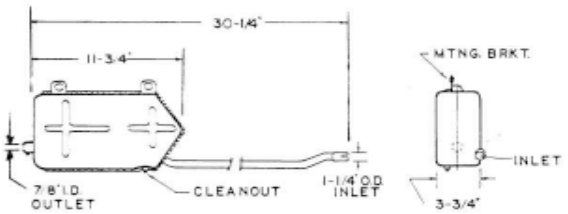

KS-500 KHI LF220

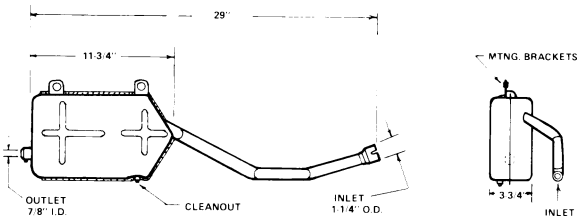

KS-500 KHI LF300C

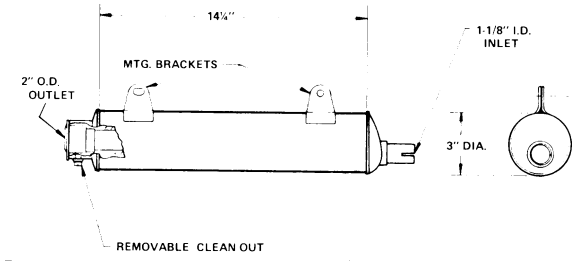

KS-500 KHI LT110A
KS-500 KHI LT160

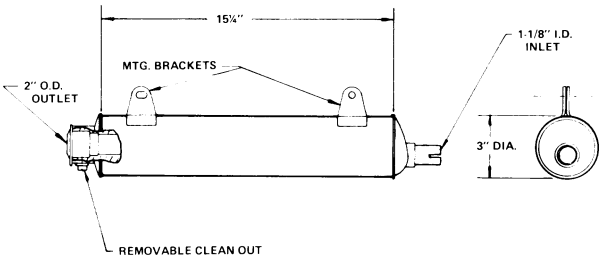

KS-500 KHI LT 250A

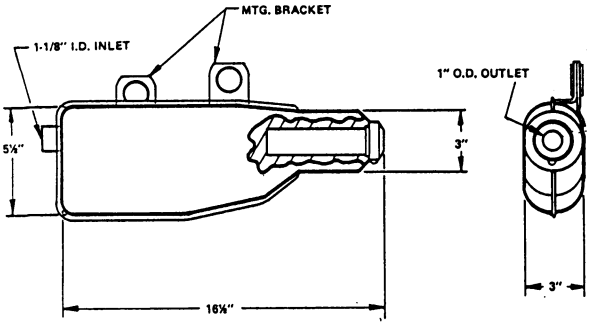

KS-500 KHI XT250

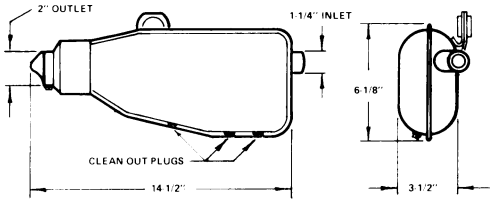

KS-500 KHI XT250B2

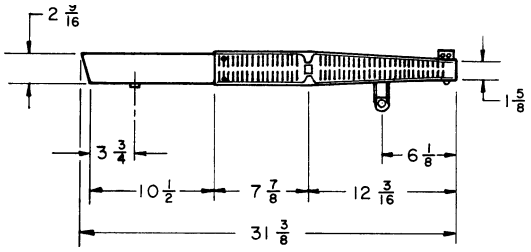

YS-80

KEEN PERCEPTIONS/KERKER-KRIZMAN/KITTEL

KEEN PERCEPTIONS

No diagrams available:
Refer to General Purpose Qualification Table at end of section for rating.

KERKER-KRIZMAN

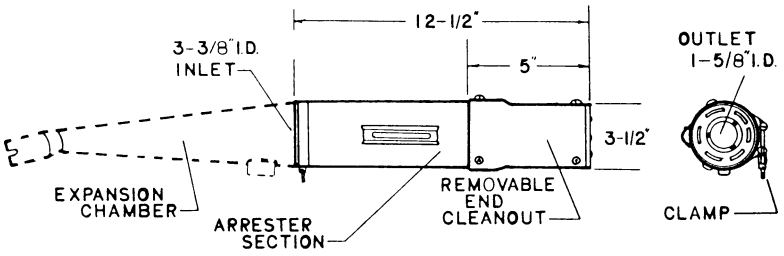

KS-650K

KITTEL

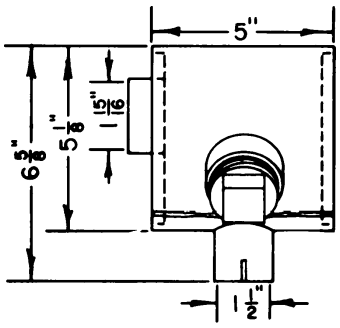

S-1 1/2A

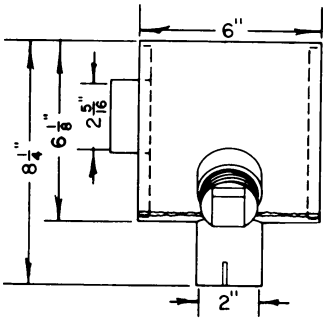

S-2A

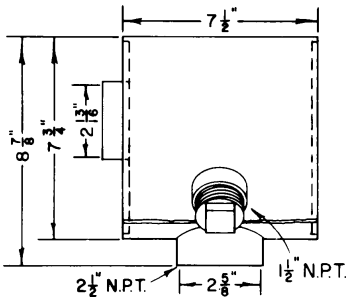

S-2 1/2A

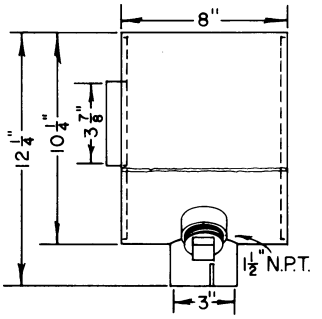

ALSO AVAILABLE WITH
3" FEMALE PIPE INLET

S-3

KITTEL *(continued)*

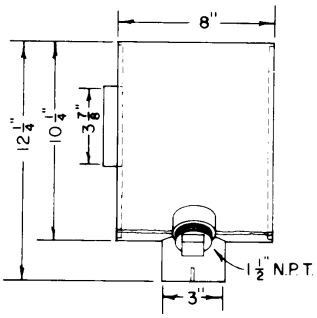

S-3A

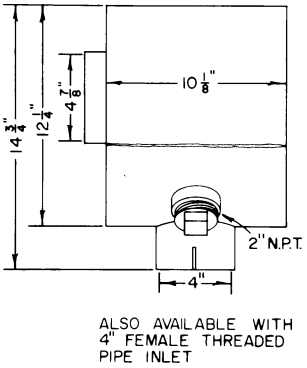

S-4

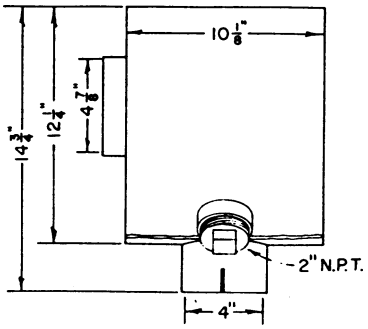

S-4A

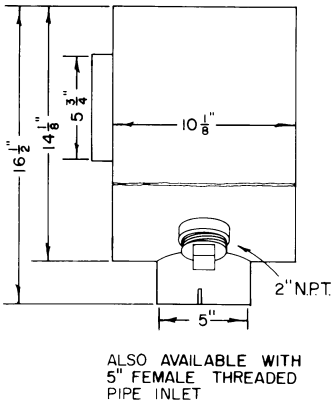

S-5

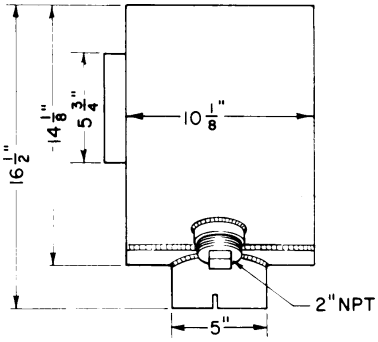

S-5A

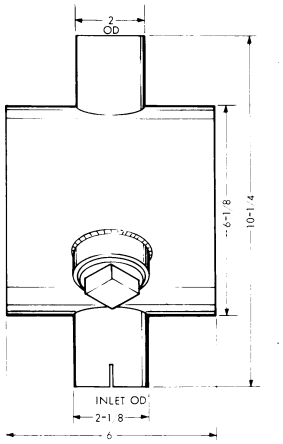

S-T-2

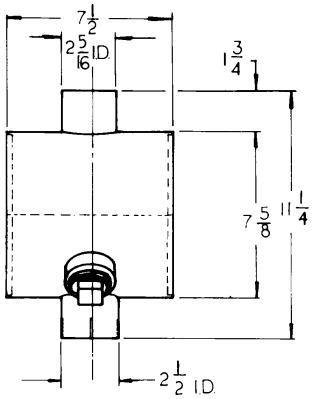

S-T-2-1/2

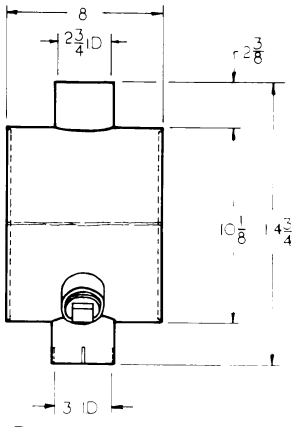

S-T-3

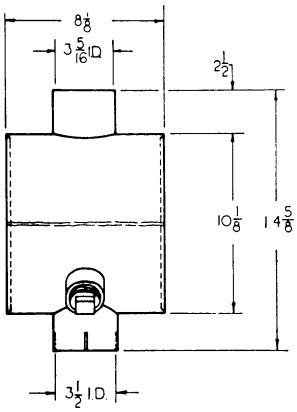

S-T-3-1/2

KITTEL/KOHLER

KITTEL *(continued)*

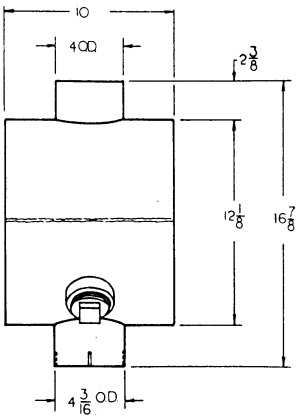

S-T-4

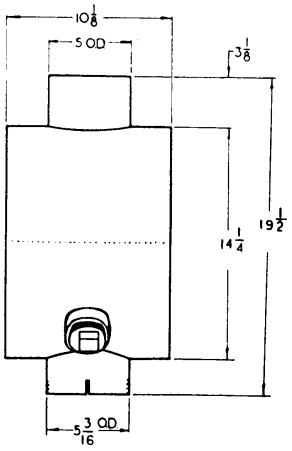

S-T-5

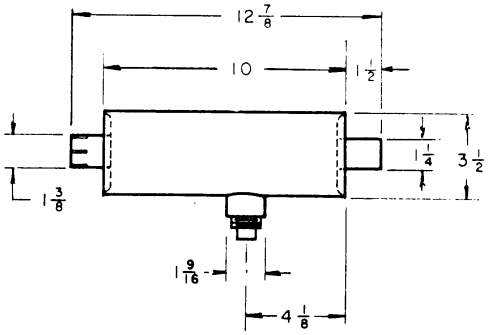

3510-SA 1-1/4

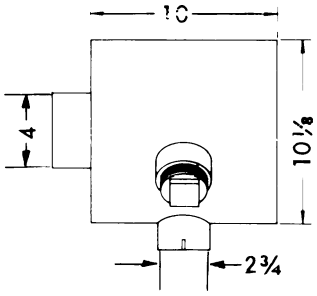

1010 HT

KOHLER

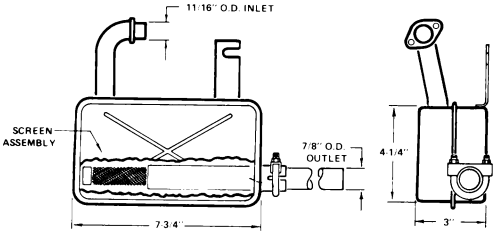

228218

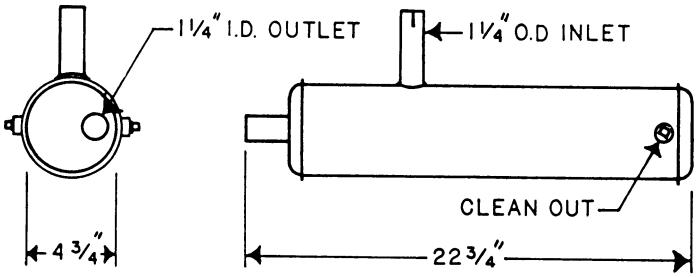

Kohler 239724
Nelson 22755

For Kohler 278402—see modified Kohler 278224 (body/arrester horizontal)
For Kohler 278403—see modified Kohler 278224 (body/arrester horizontal)
For Kohler 278416—see modified Kohler 278223 (body/arrester horizontal)

KOHLER *(continued)*

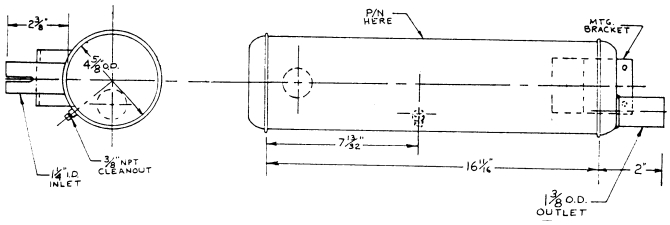

278189

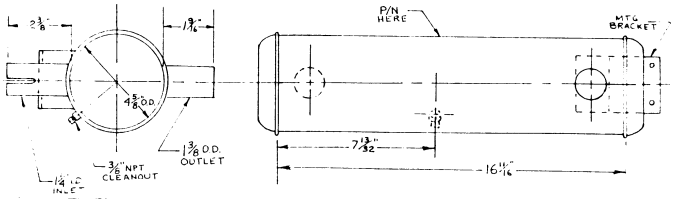

278218

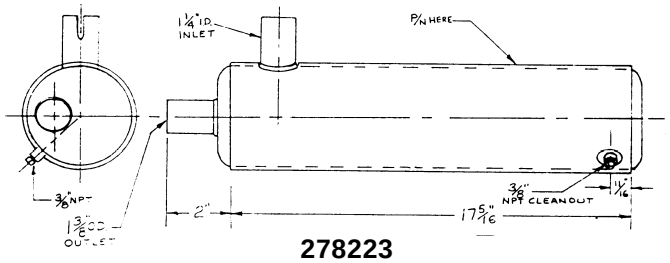

278223

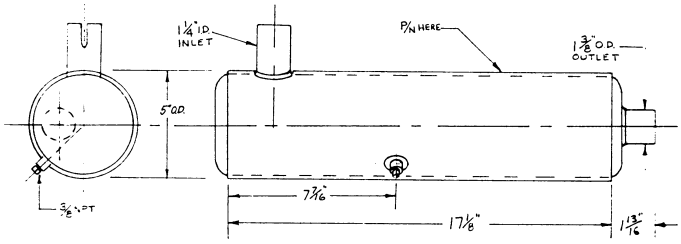

278224

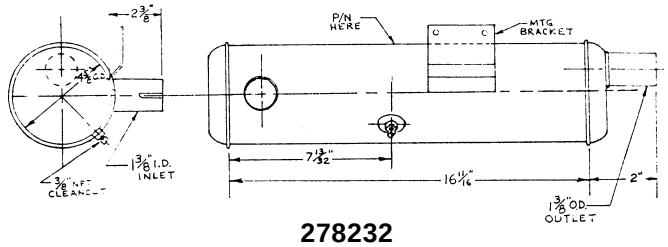

278232

KRIZMAN/KTM

KRIZMAN

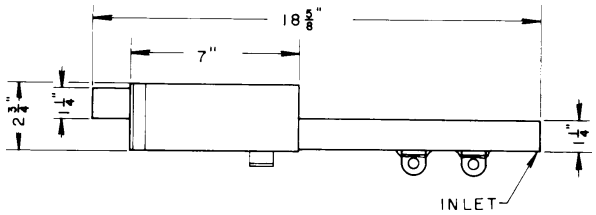

II-5H.34B

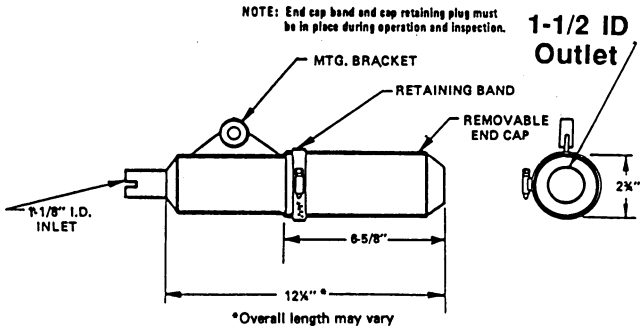

KS 650A

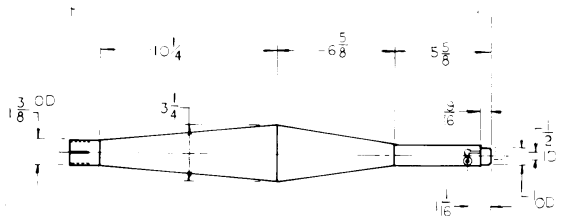

T-H100
T-H100M

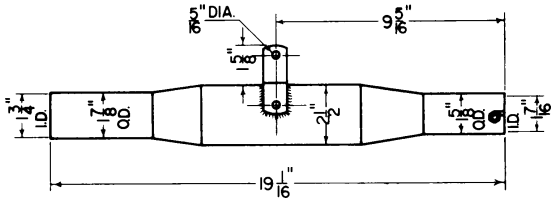

V-H1

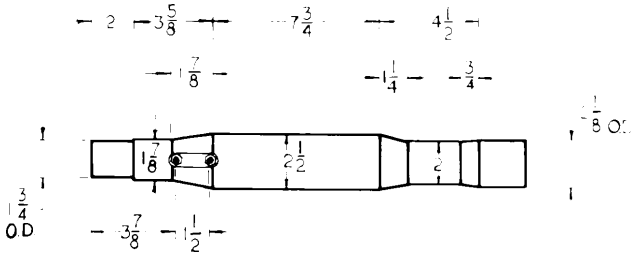

V-H11

KTM

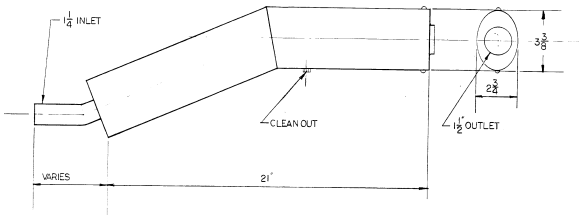

KTM K-300

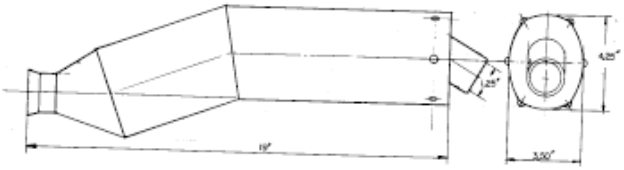

KTM K-620

KUBOTA

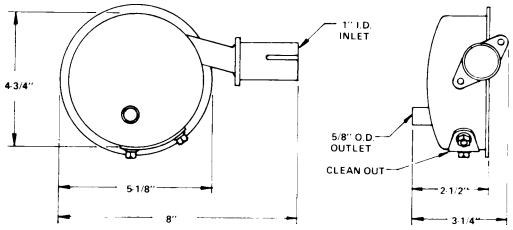

8501A

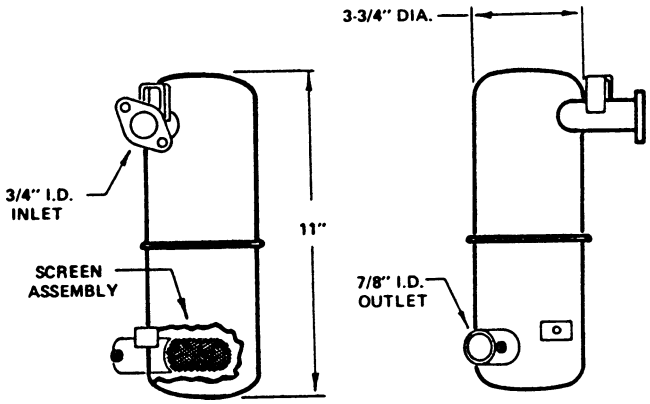

8502C

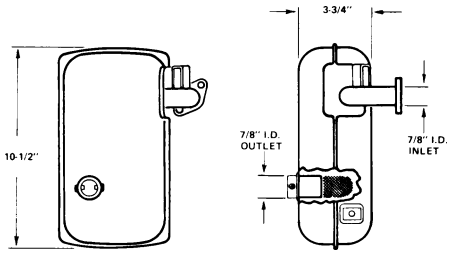

8503C

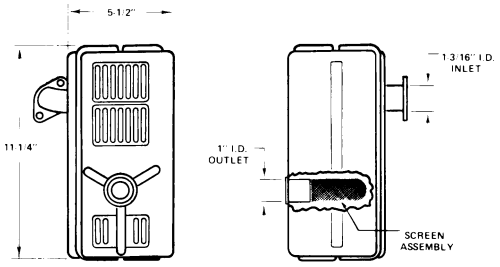

8504C

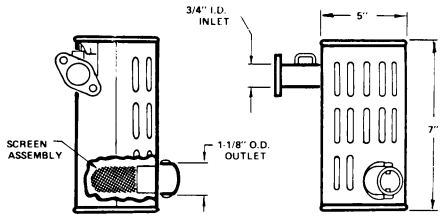

8505B

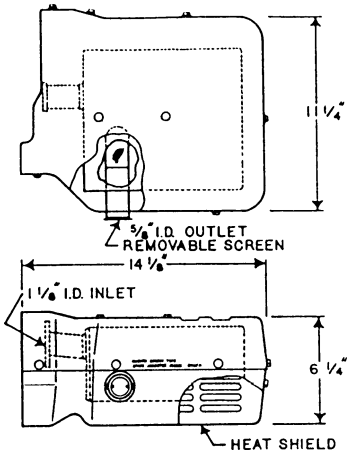

8906A

KUBOTA *(continued)*

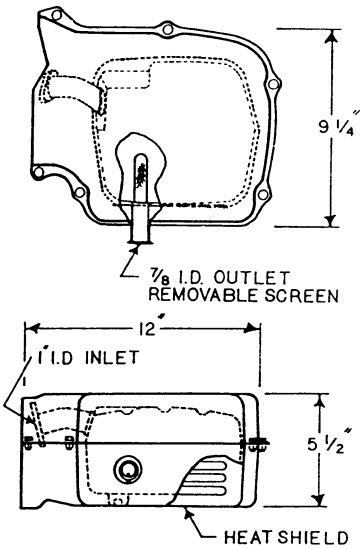

8907A

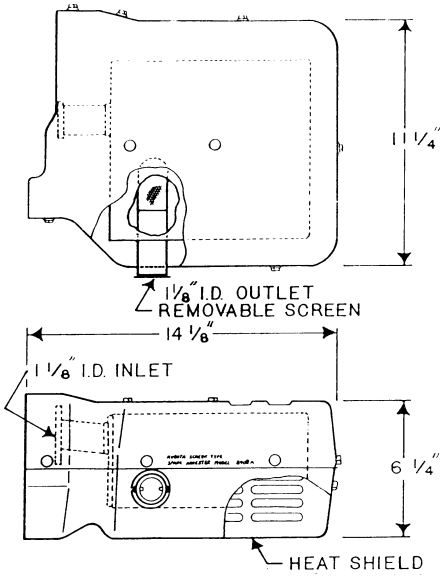

8908A

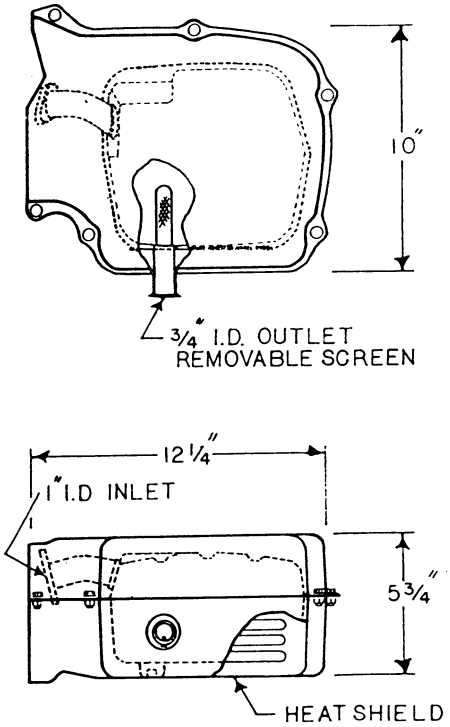

8909A

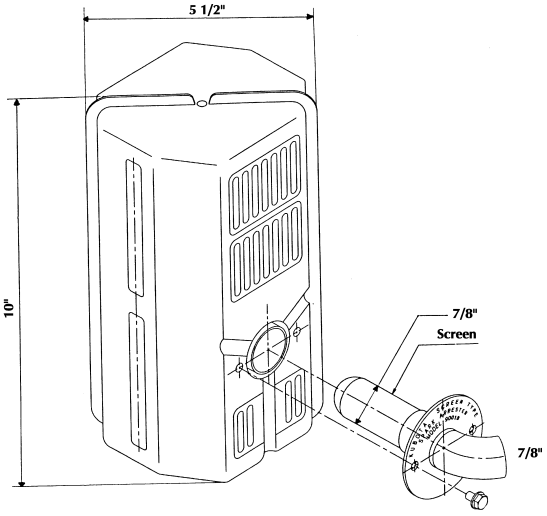

9001B

MAGNUM-KRIZMAN/MAGNUM RACING/MAREMONT

MAGNUM-KRIZMAN

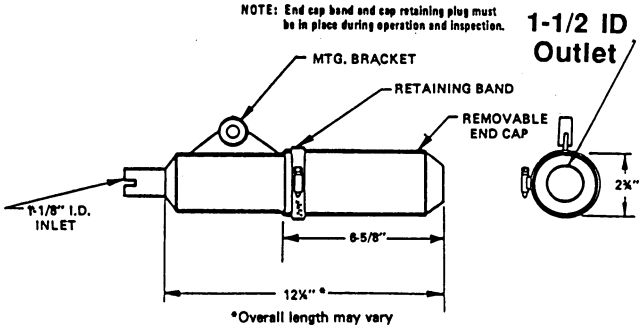

KS 650 A

MAGNUM RACING

No diagrams available:
Refer to General Purpose Qualification Table at end of section for rating.

MAREMONT ⊕

No diagrams available:
Refer to General Purpose Qualification Table at end of section for rating.

MAXIM/McCULLOCH

MAXIM

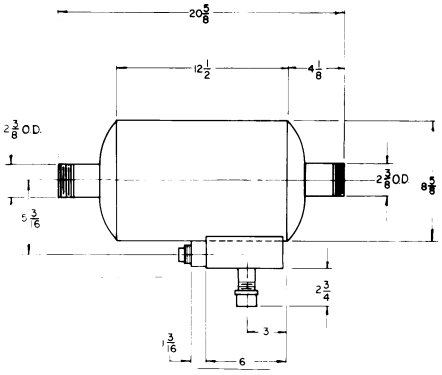

2" MSA1

McCULLOCH

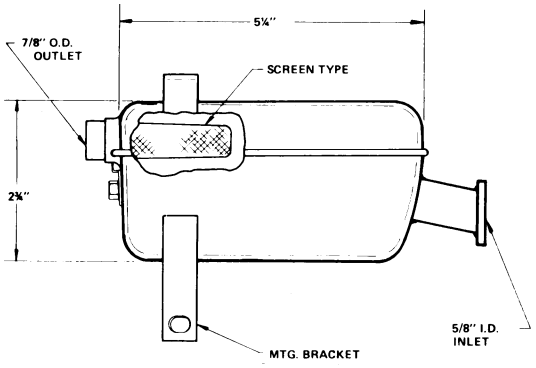

MPP 600E/800E

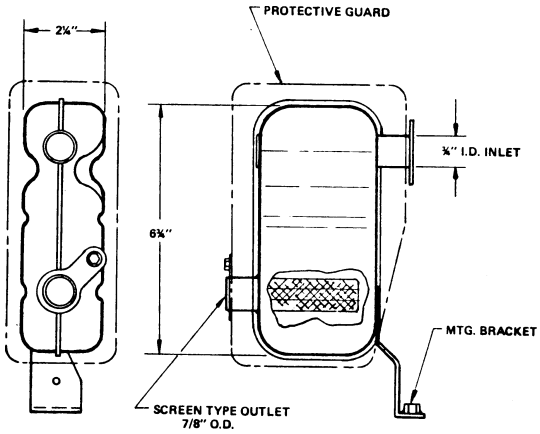

MPP 1500E

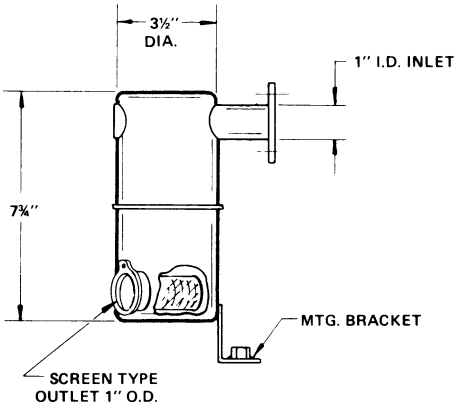

MPP 2300E

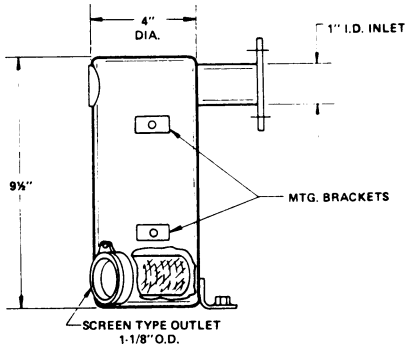

MPP 3500E

MURPHY/NELSON

MURPHY

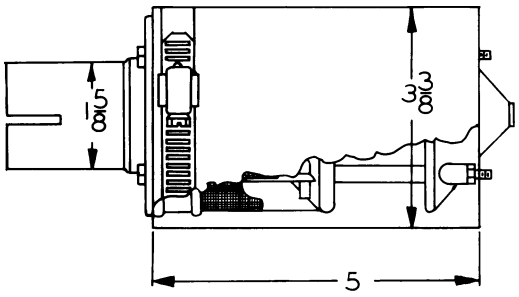

MM3S 2.5

NELSON

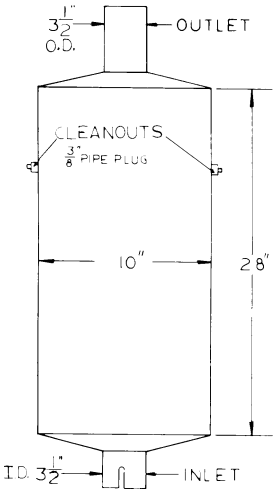

14110

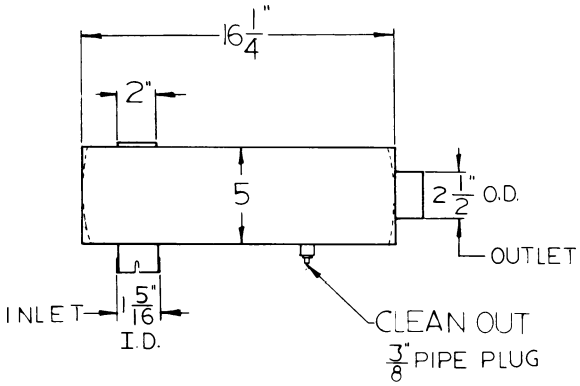

14113

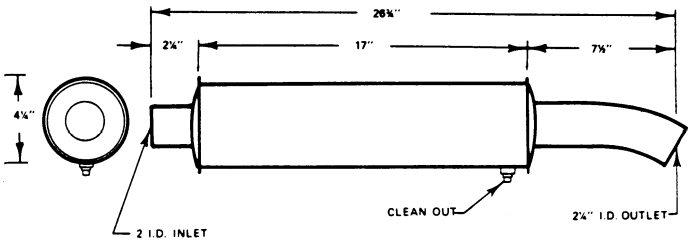

14217

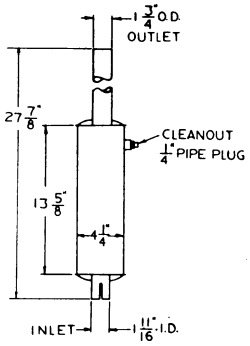

14390

NELSON *(continued)*

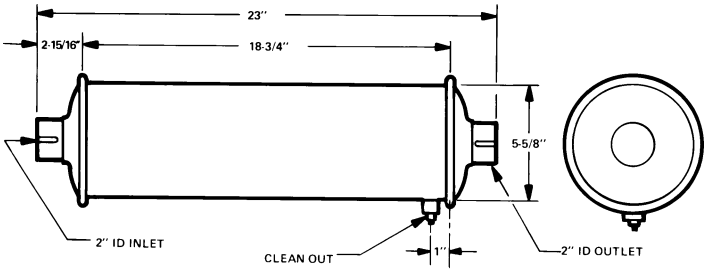

14572

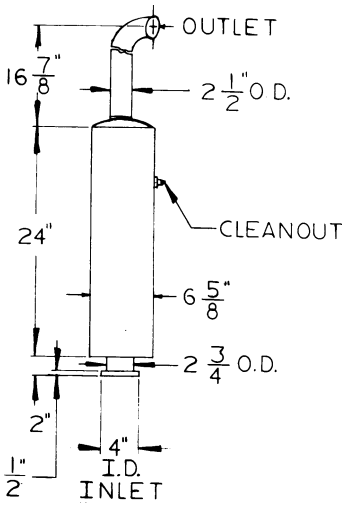

15064A

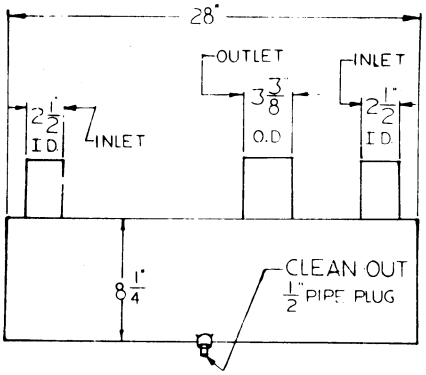

15514

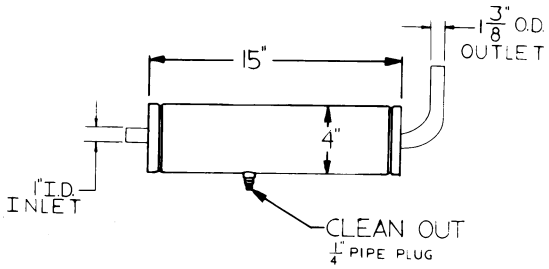

15567

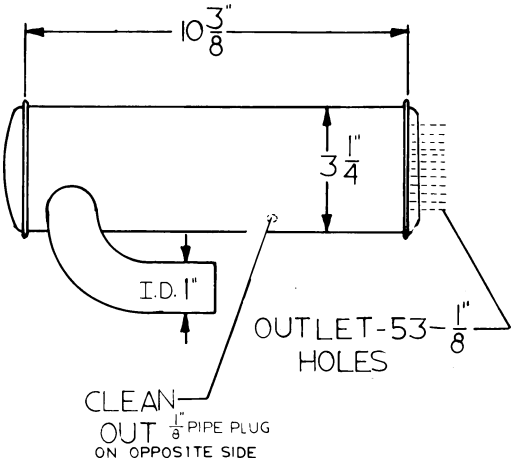

15730

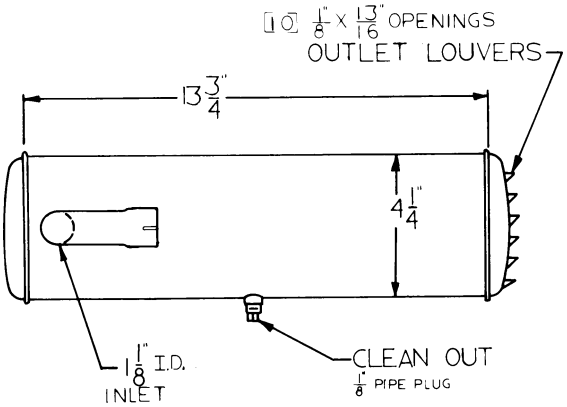

15731

NELSON *(continued)*

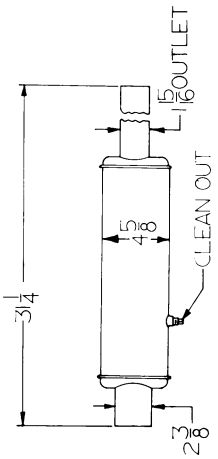

15818

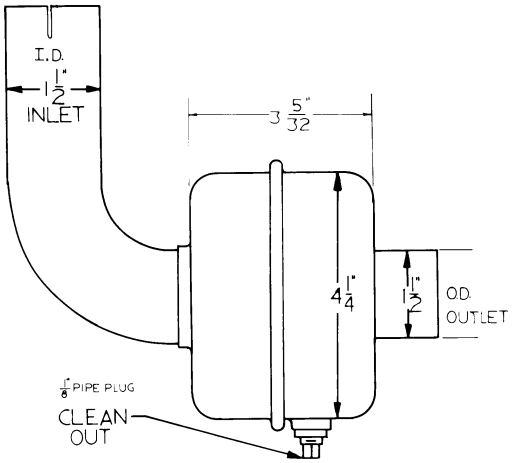

15870

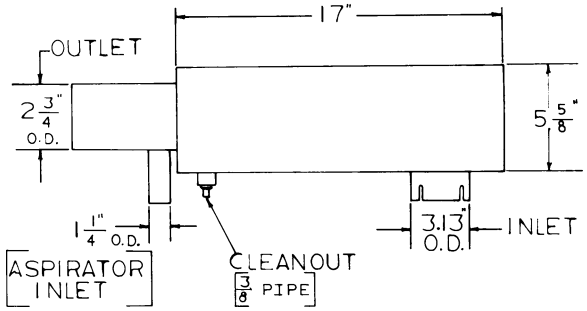

15876

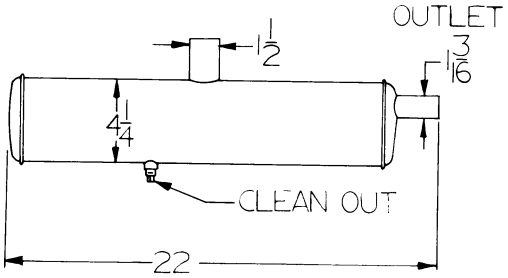

15893
ONAN 155-1520

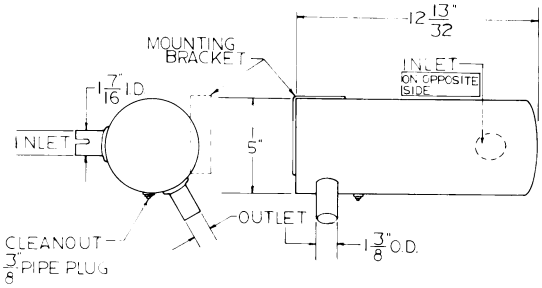

15934

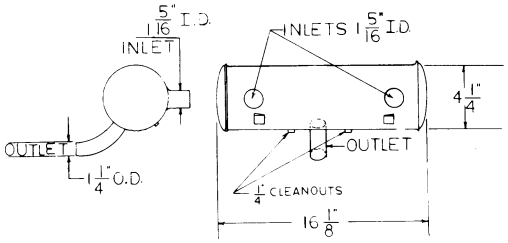

15935

NELSON *(continued)*

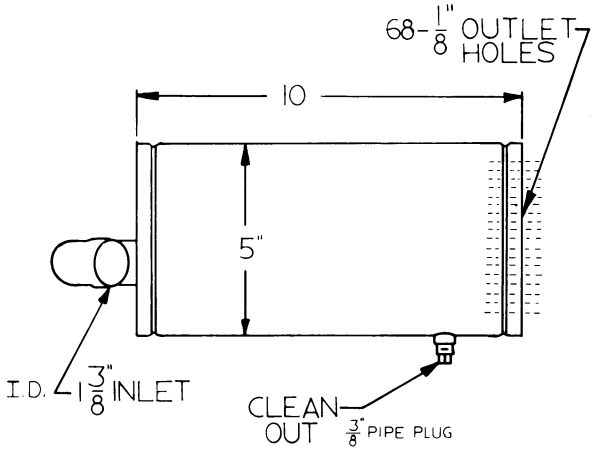

15982

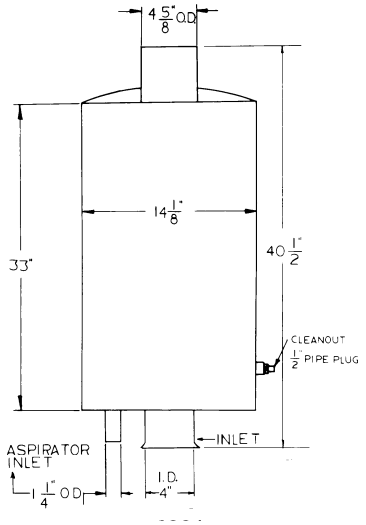

16001

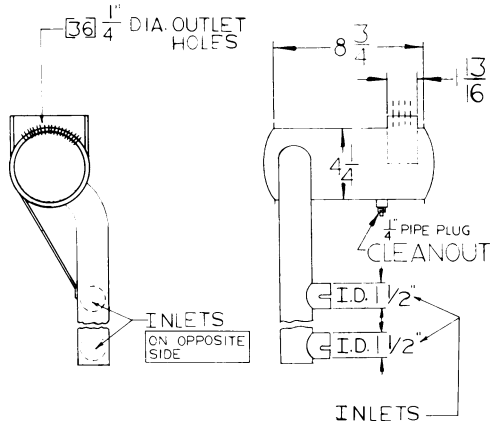

16006

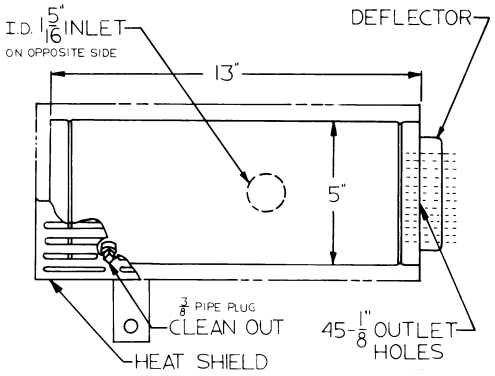

16011

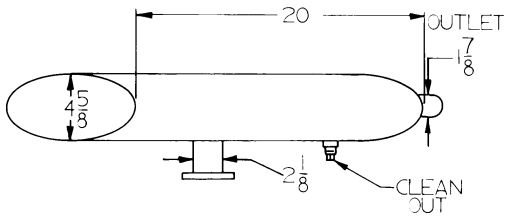

16025

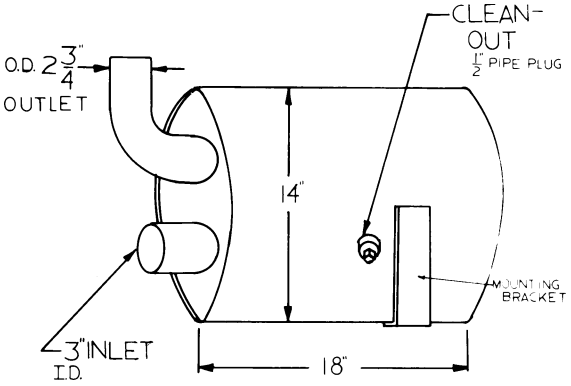

16068

NELSON *(continued)*

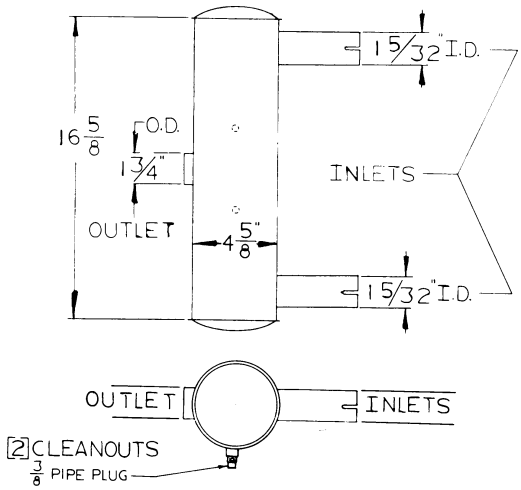

16152

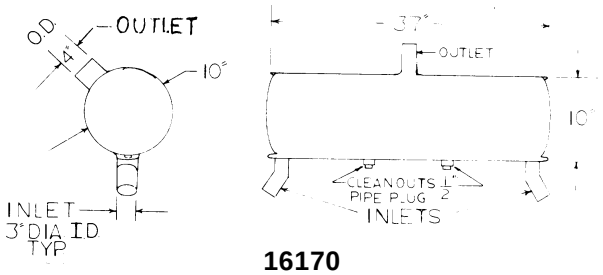

16170

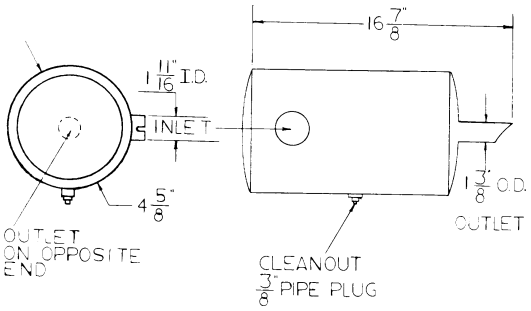

16297

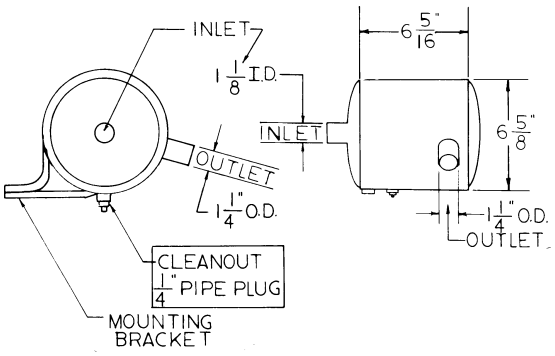

16300

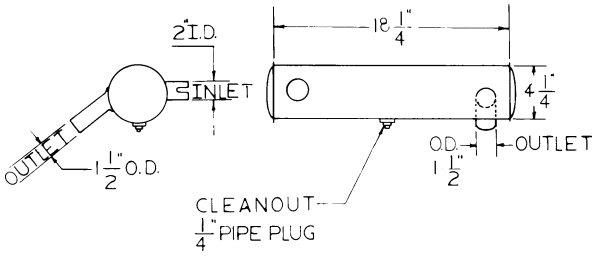

16301

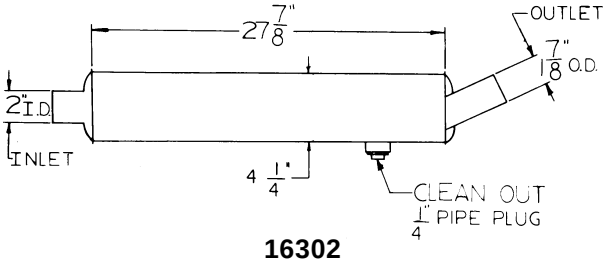

16302

NELSON *(continued)*

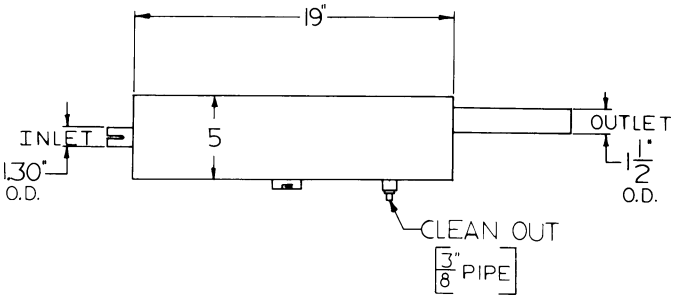

16304

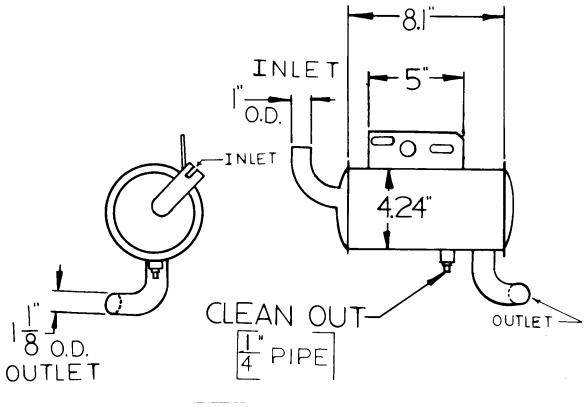

16361

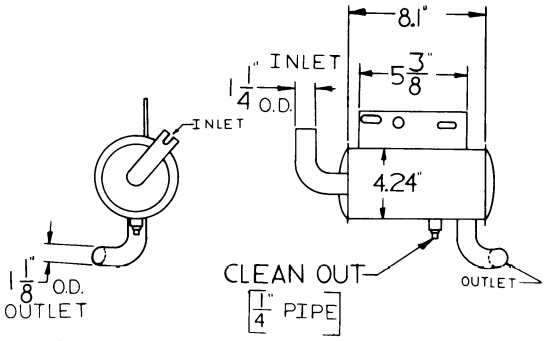

16362
22157

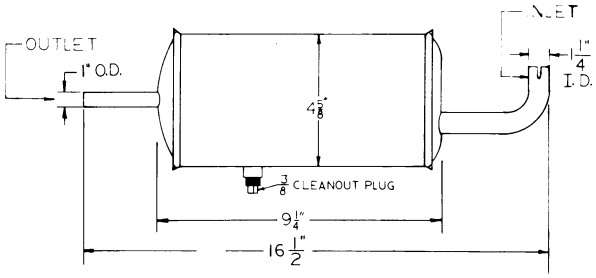

16460

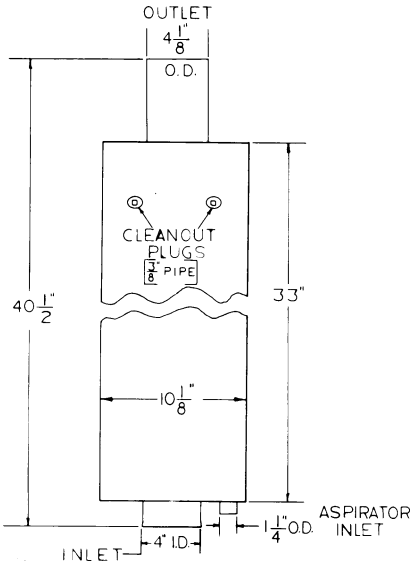

16504

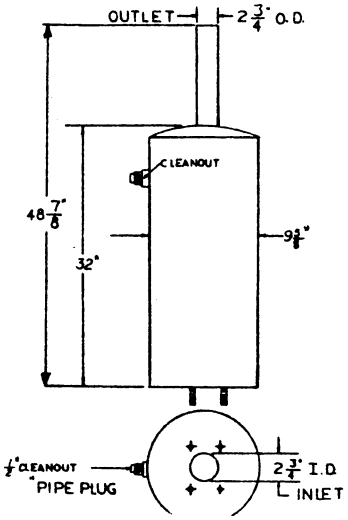

16506A

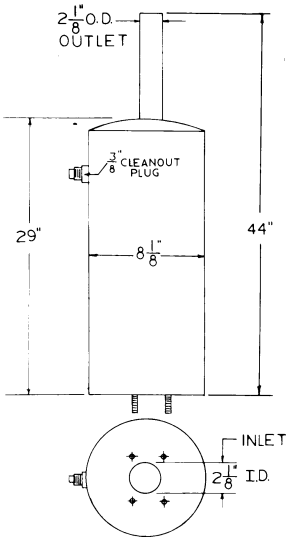

16507A

NELSON *(continued)*

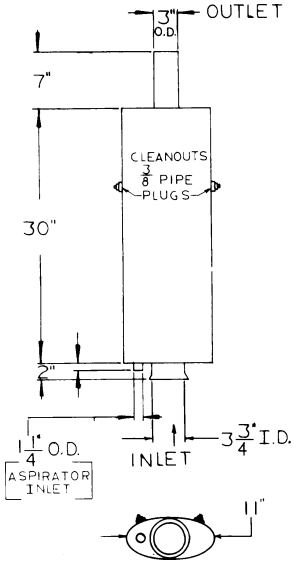

16538

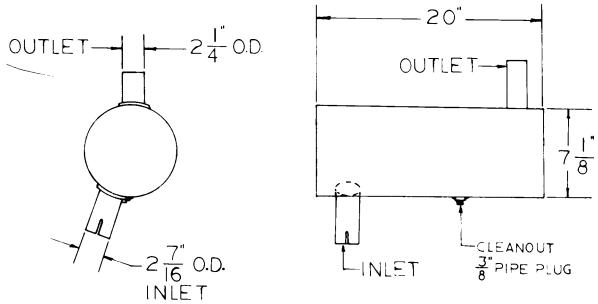

16547

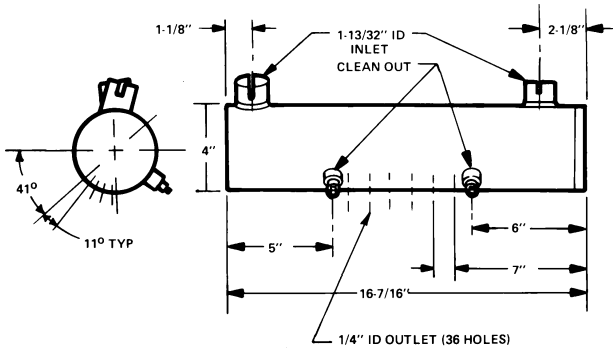

16572

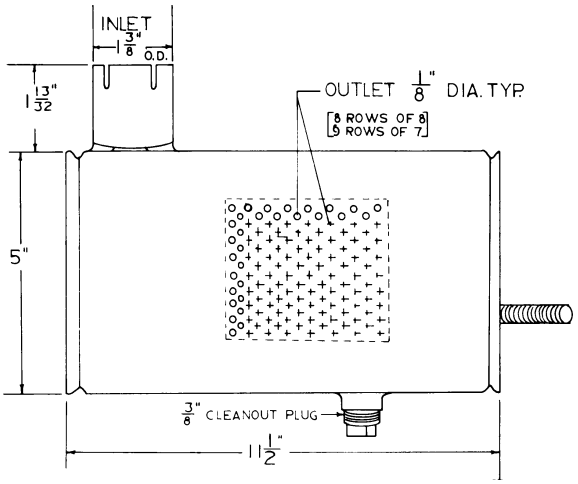

16619

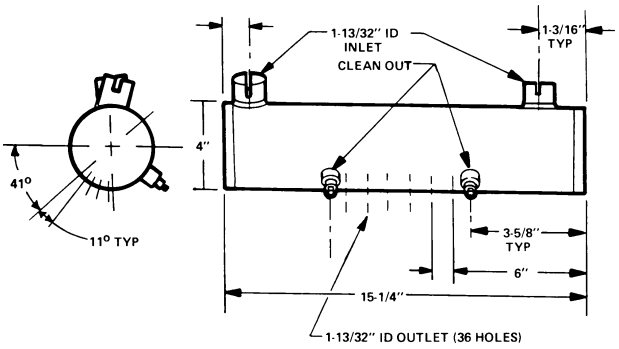

16628

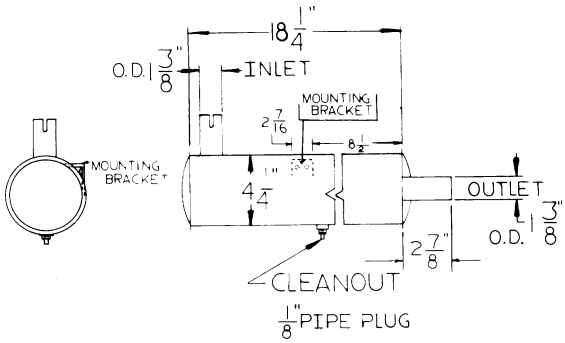

16667

NELSON *(continued)*

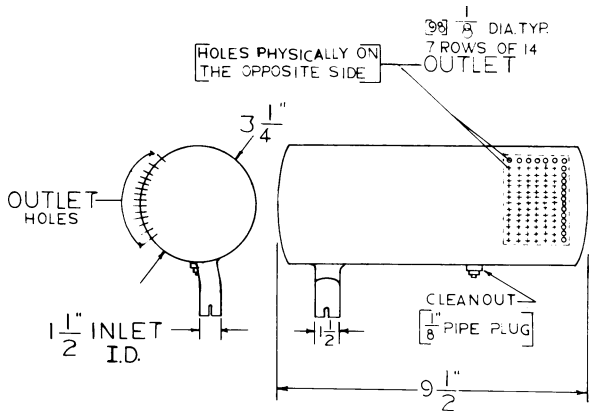

16752

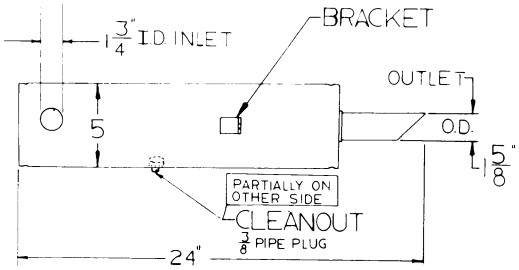

16825

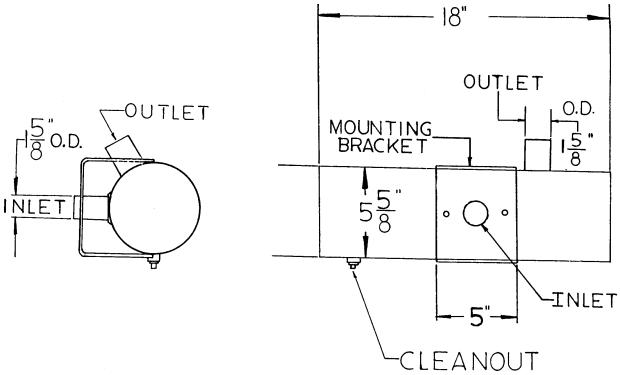

16828

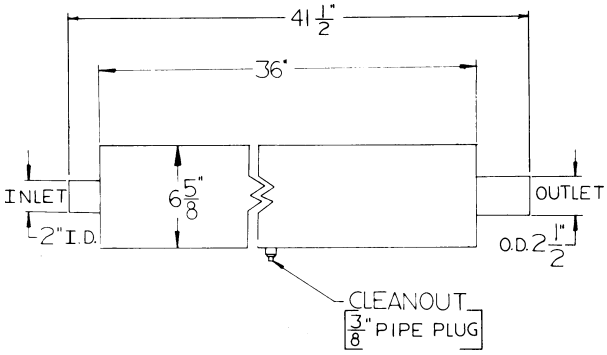

16868

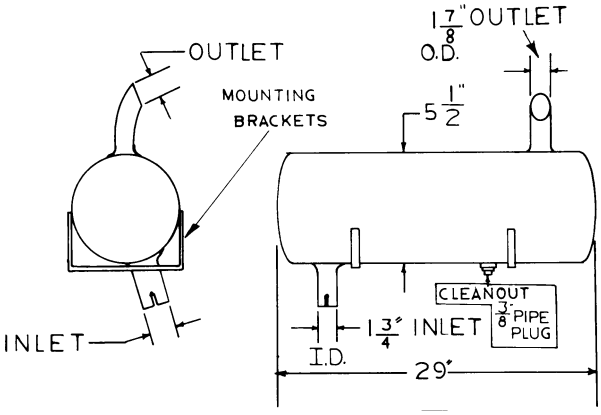

16888

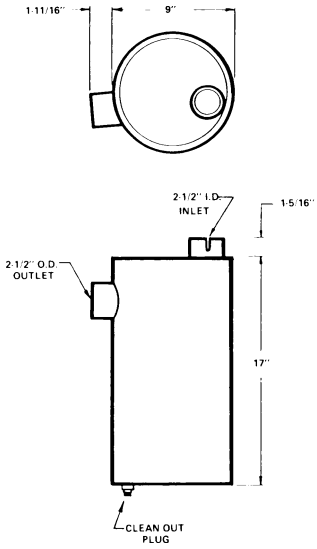

16909

NELSON *(continued)*

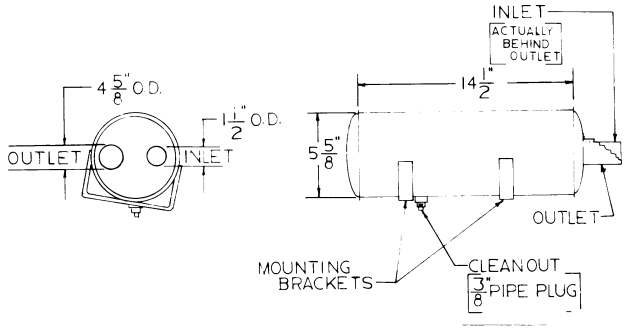

16932

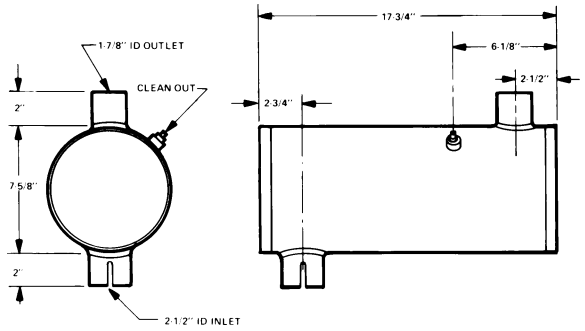

16956

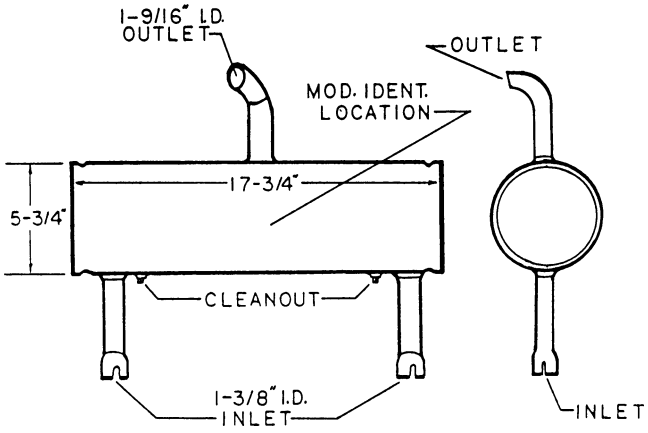

16986

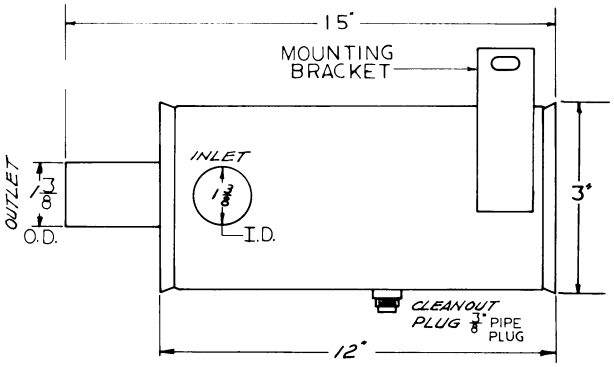

16988

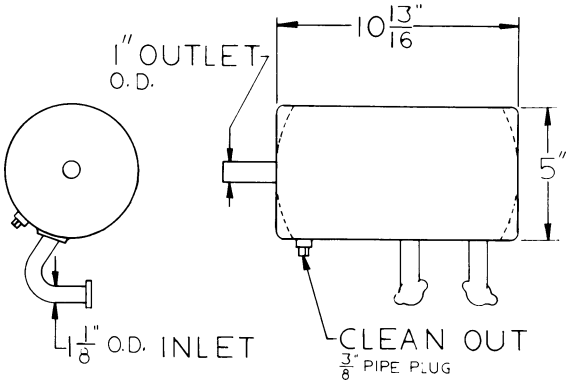

16989

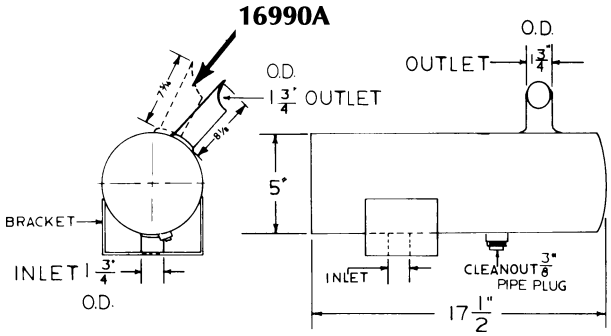

16990
16990A

Note: The difference between the 16990 and 16990A is the rotation angle, and length of outlet tube.

NELSON *(continued)*

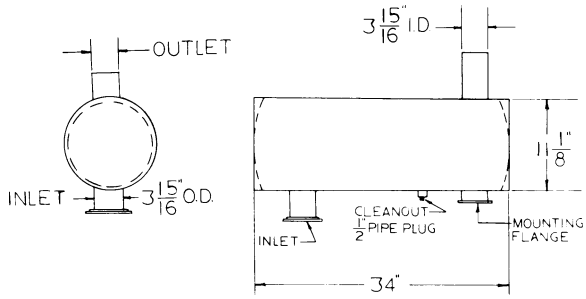

17005

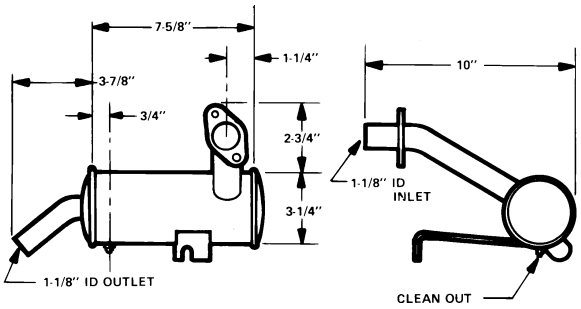

17043

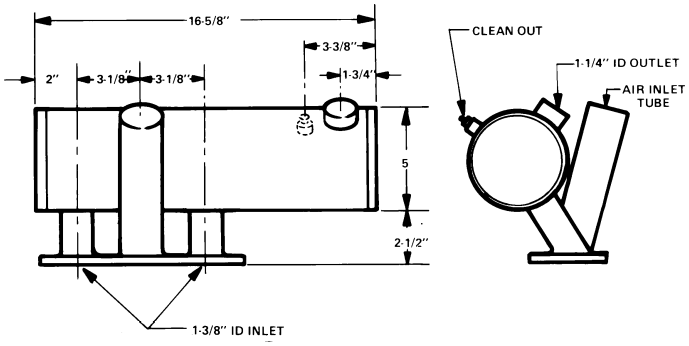

17088

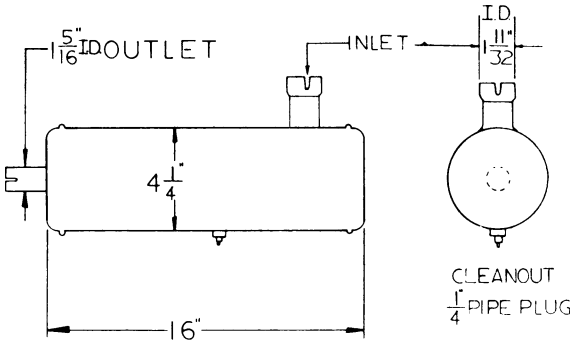

17112

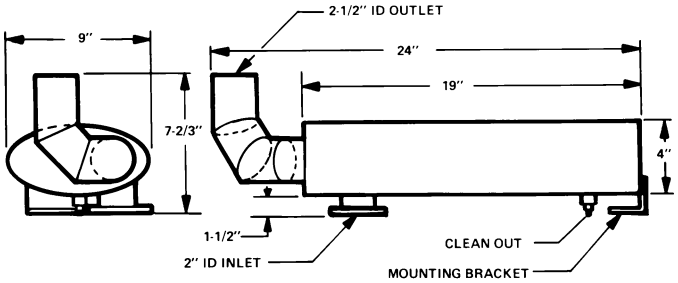

17123

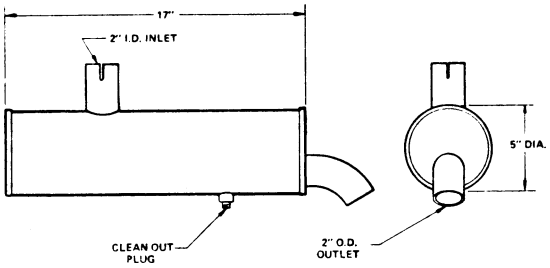

17185

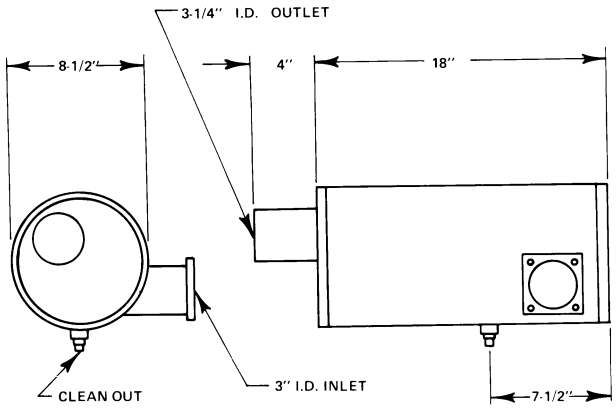

17254

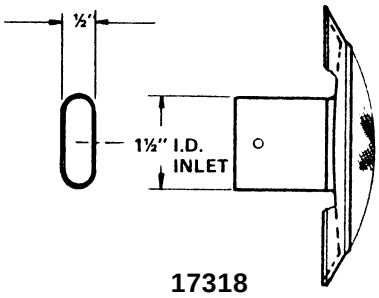

17318

For Nelson 35347 screen assembly

NELSON *(continued)*

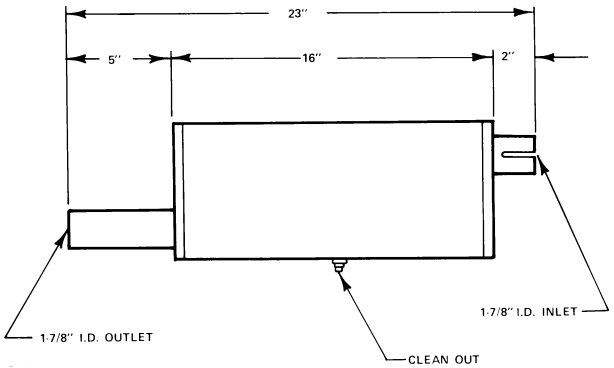

17334

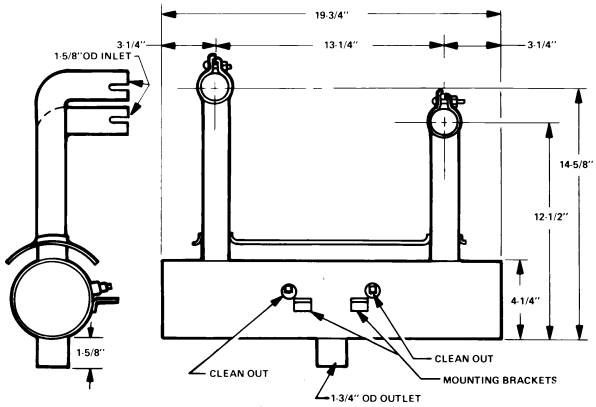

17371

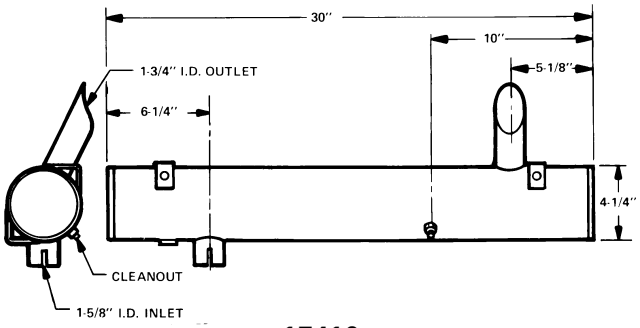

17410

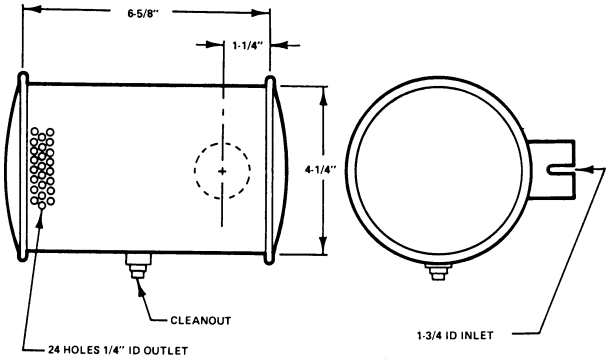

17470

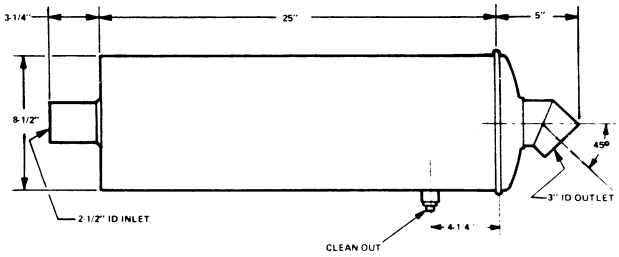

17480

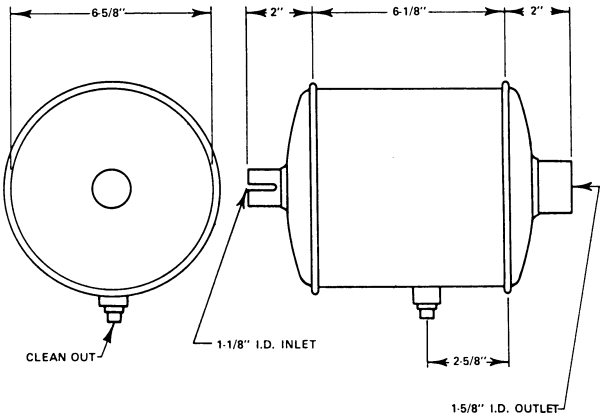

17533

NELSON *(continued)*

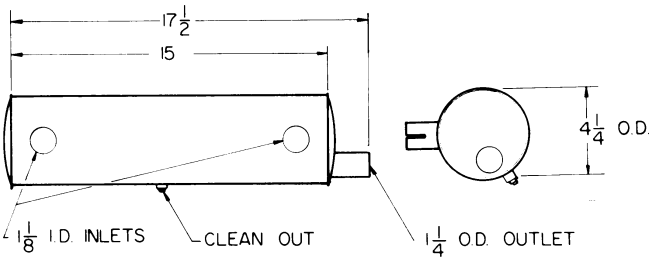

17622
17622C

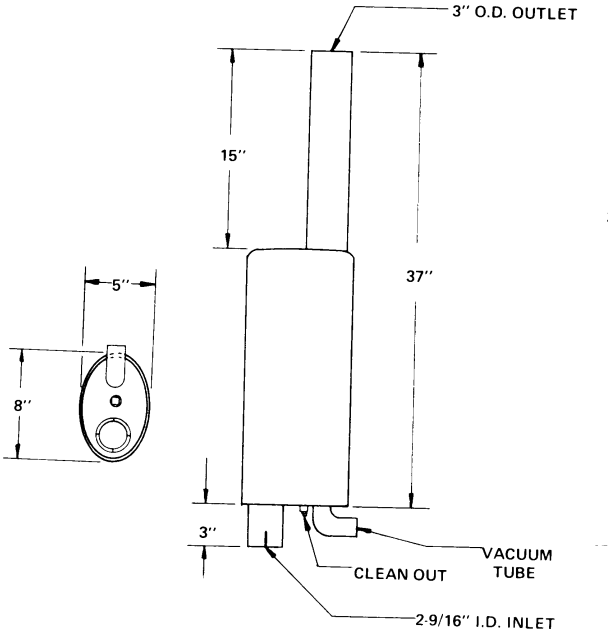

17657

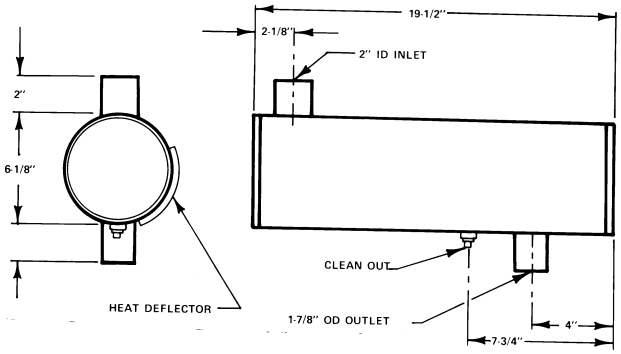

17674

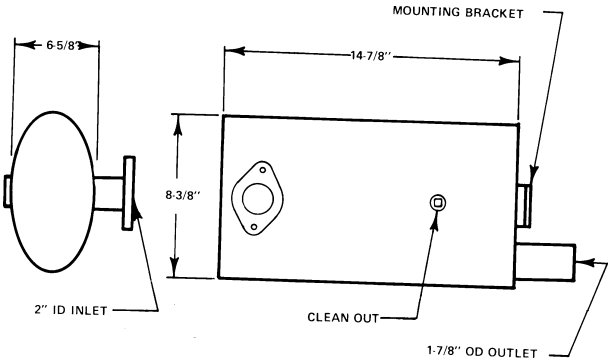

17695

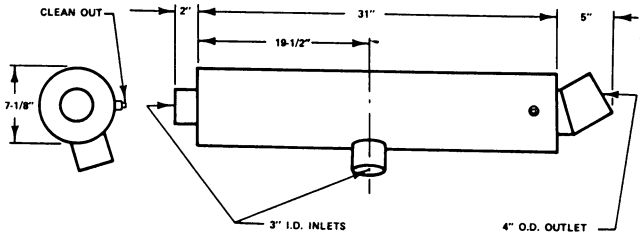

17701

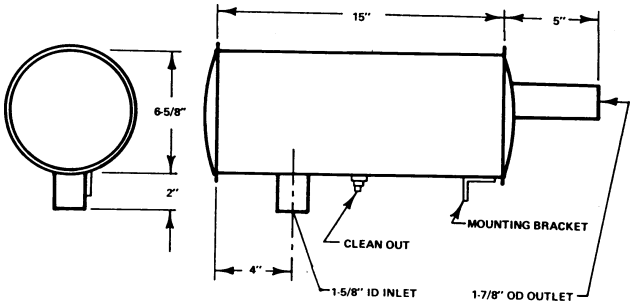

17746

NELSON *(continued)*

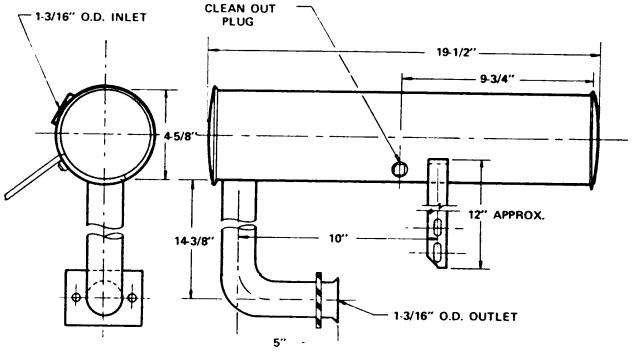

17747

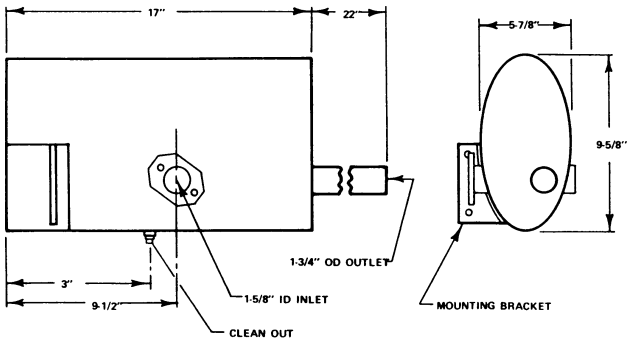

17749

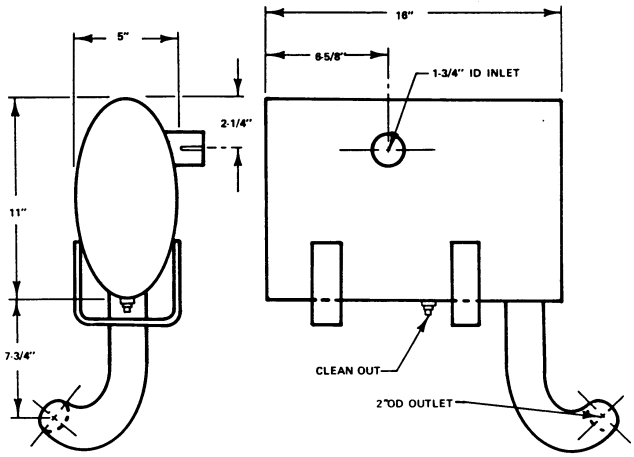

17750

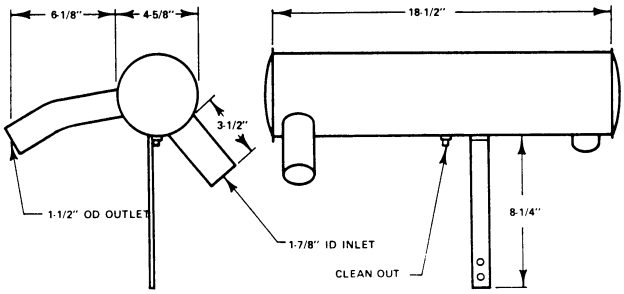

17765

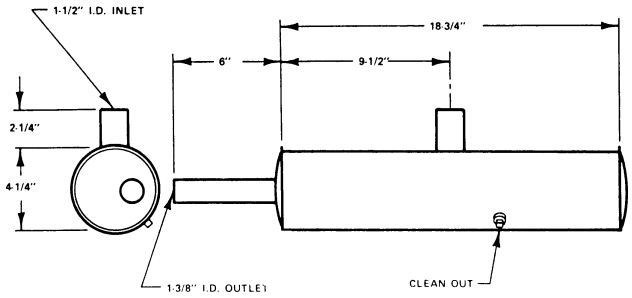

17898

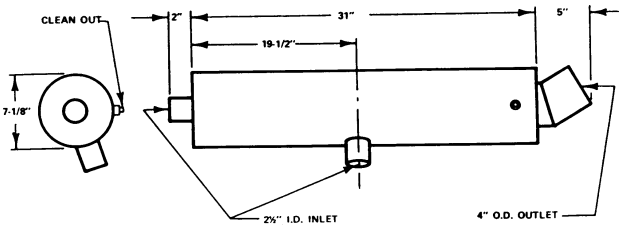

17899

NELSON *(continued)*

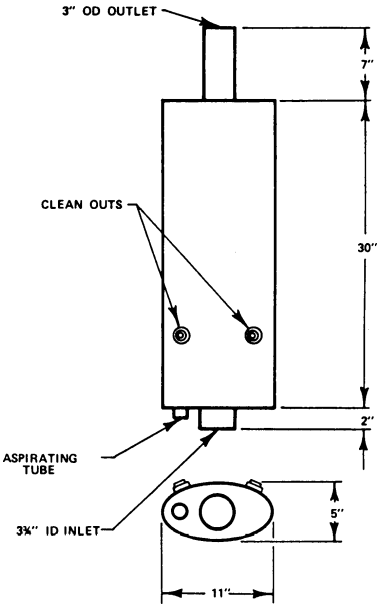

17973

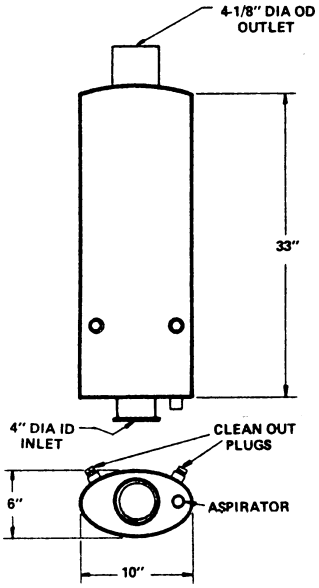

17974

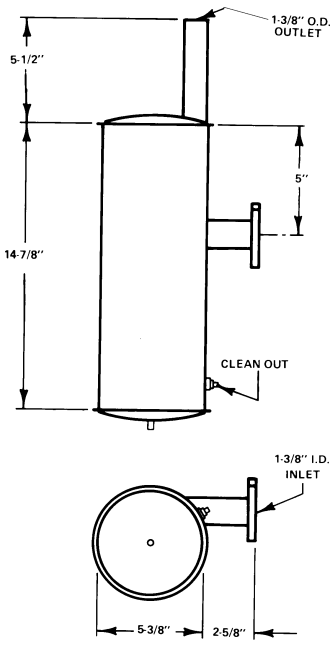

17998

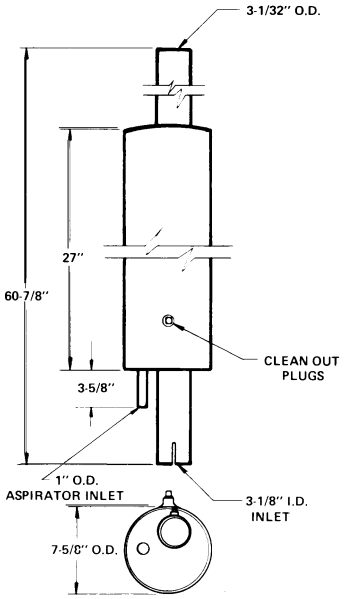

18018

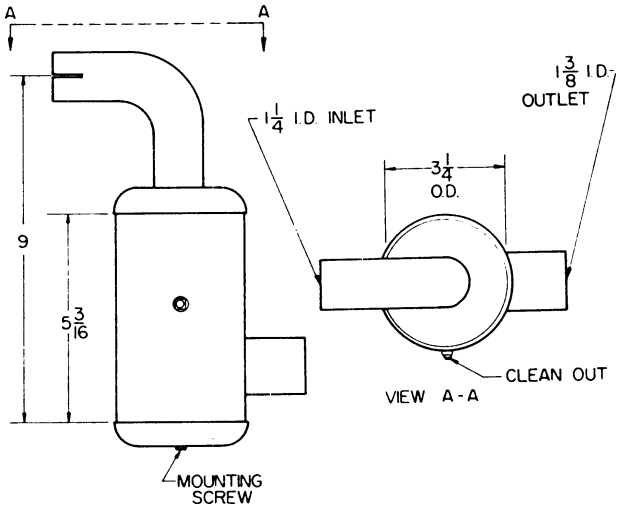

18031

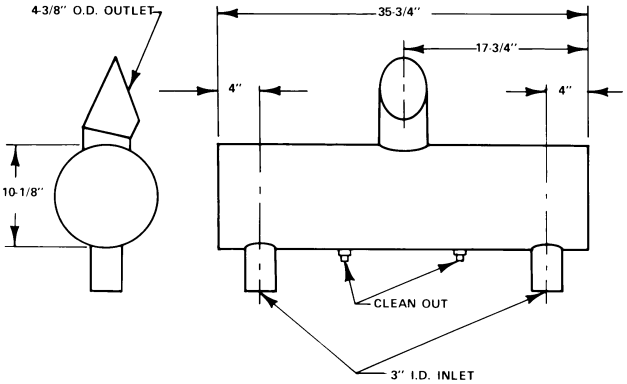

18090

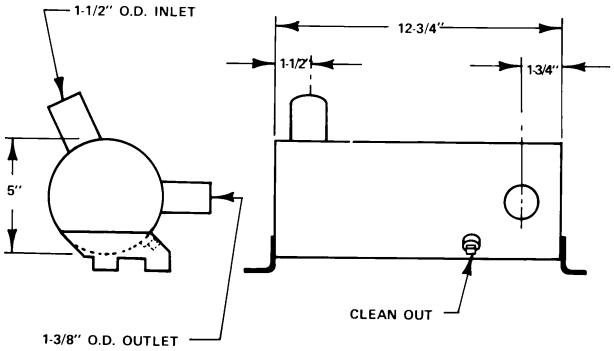

18289

NELSON *(continued)*

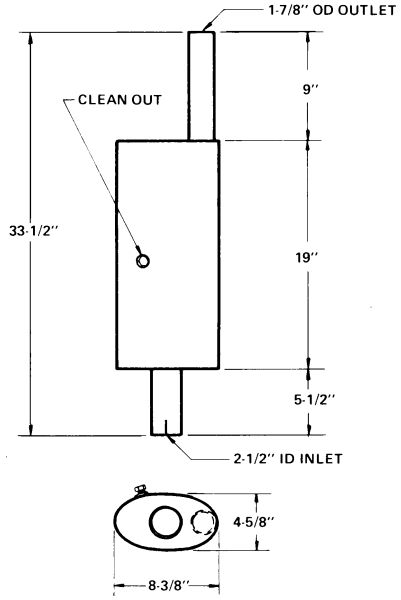

18433

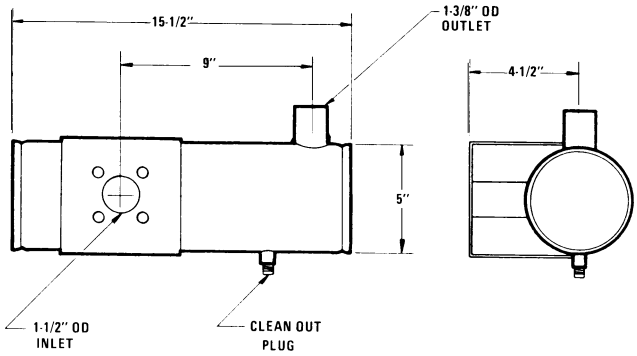

18528
18528A

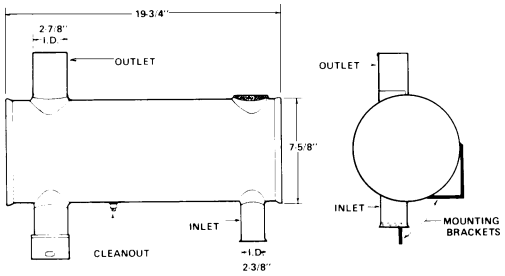

18613

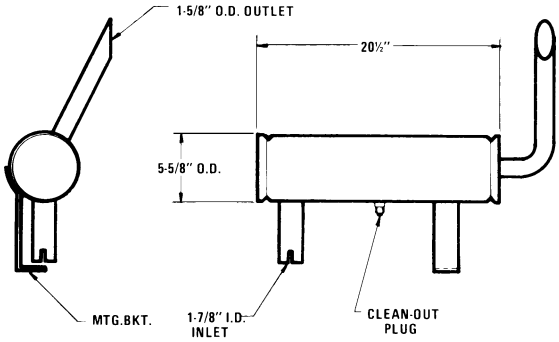

18631

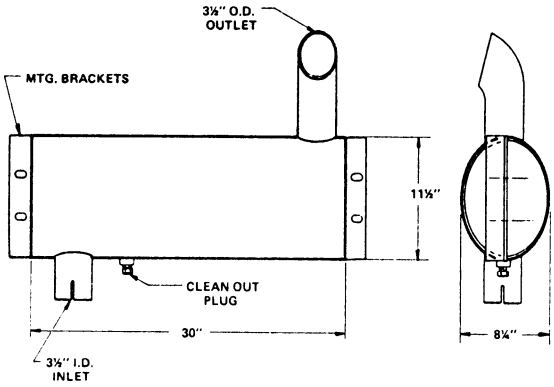

18642

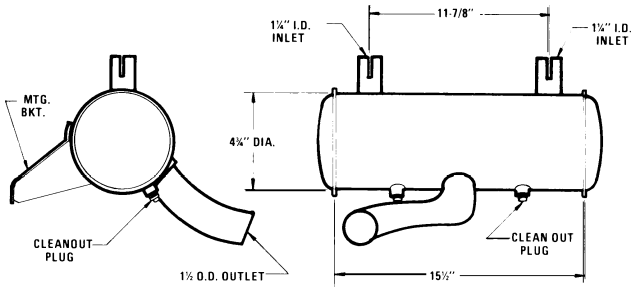

18731

NELSON *(continued)*

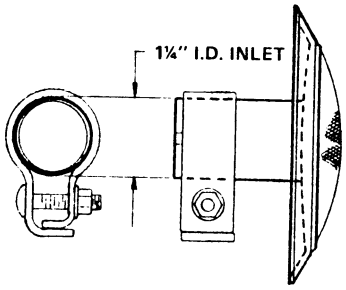

ADAPTER
18753

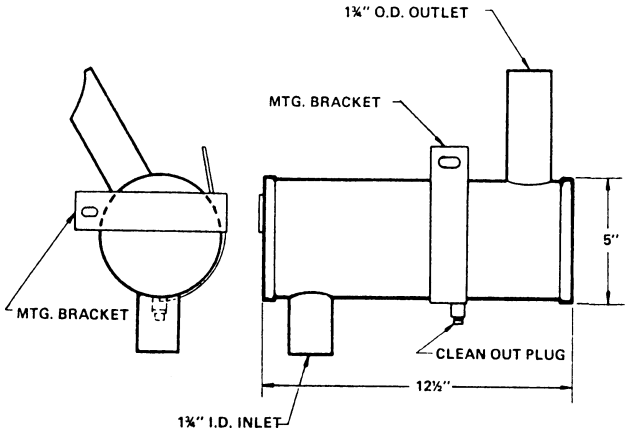

18798

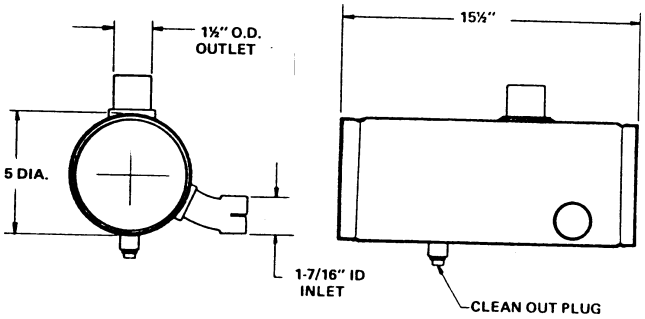

18875

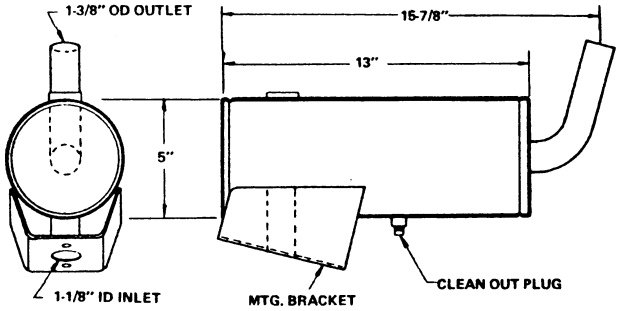

18885

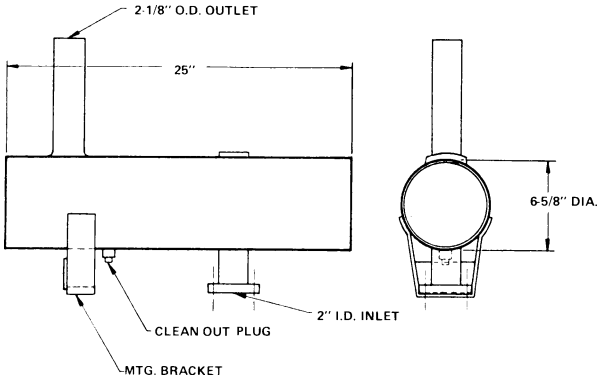

19005

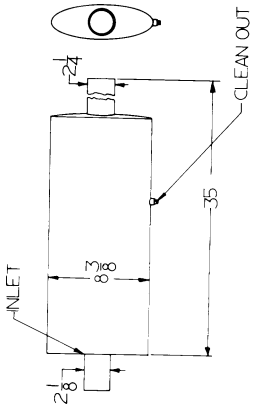

T-14222

Nelson 19051 approved as T-14222
Nelson 19052 approved as T-14222
Nelson 19053 approved as T-14222
Nelson 19062 approved as T-14222

NELSON *(continued)*

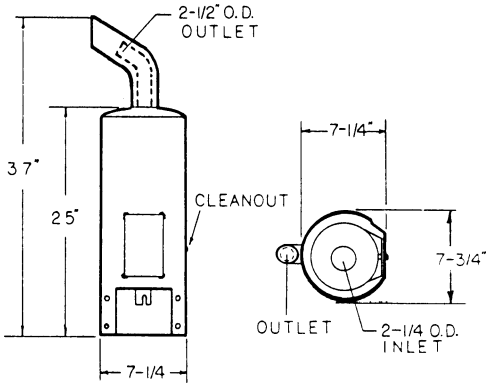

19068

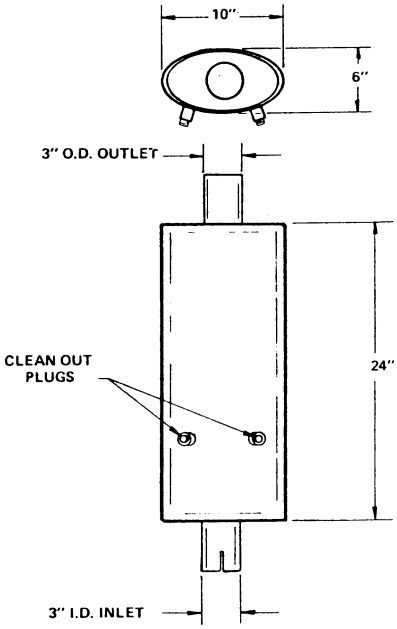

19125

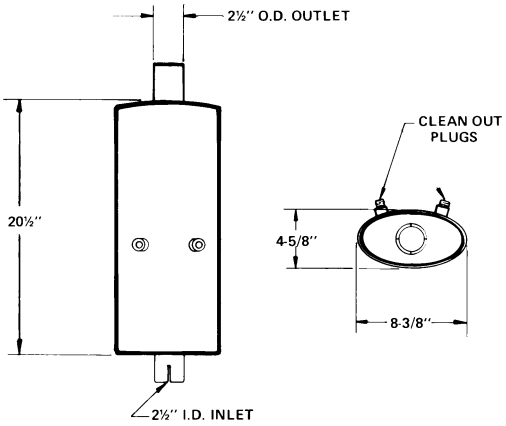

19126

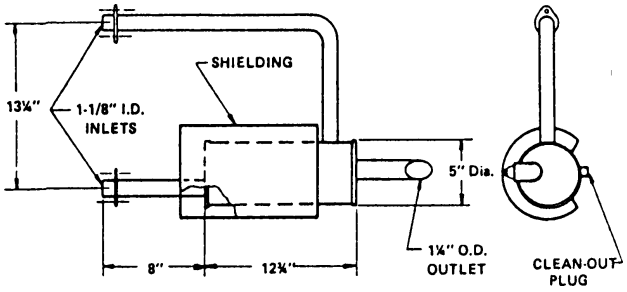

19139

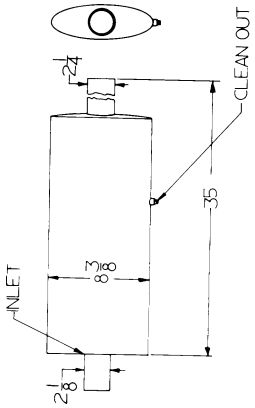

19269
T-14222

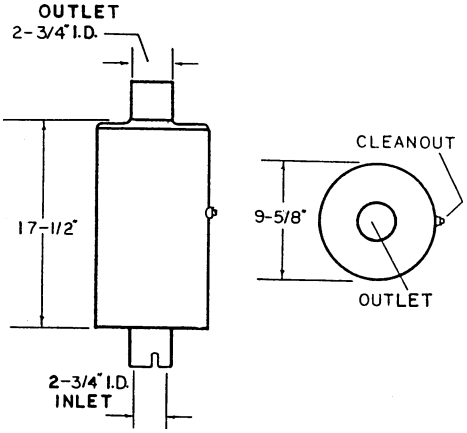

19273
T-14219

NELSON *(continued)*

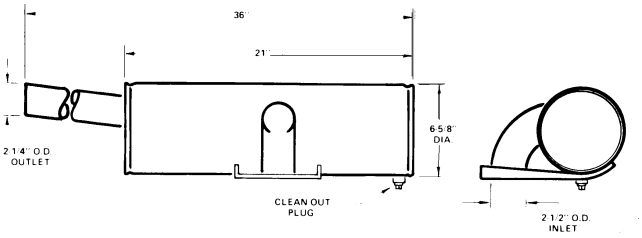

19341

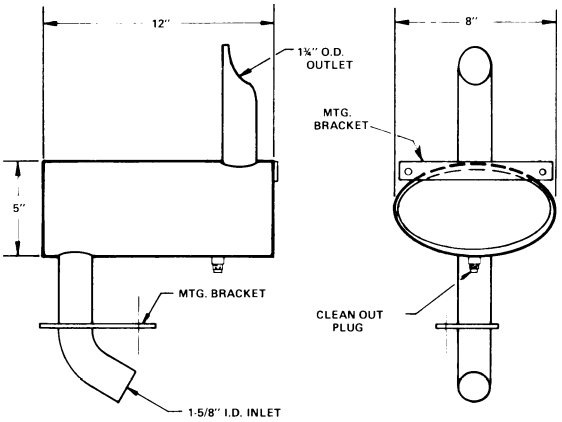

19382
23094

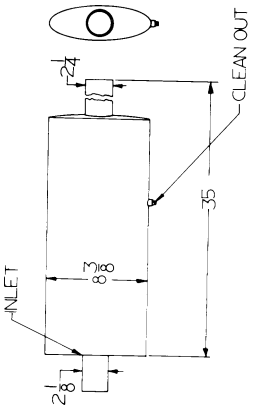

19383
T-14222

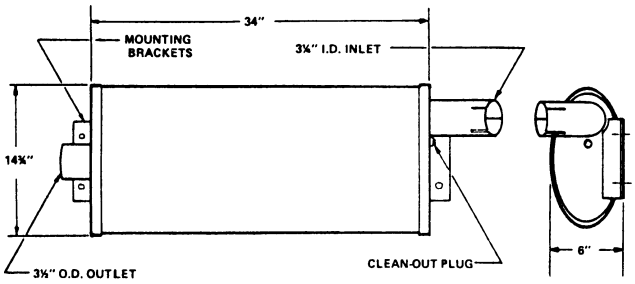

19453

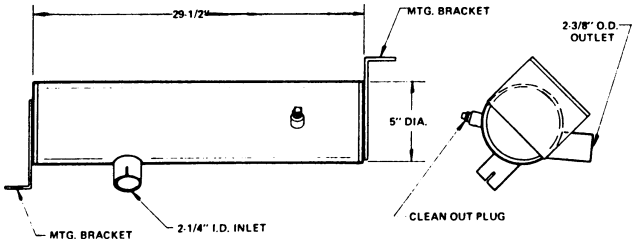

19578

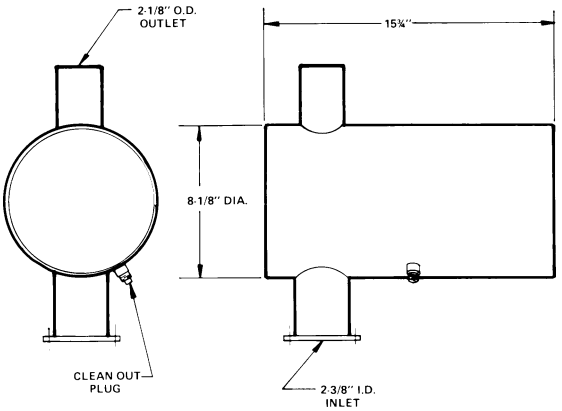

19705

NELSON *(continued)*

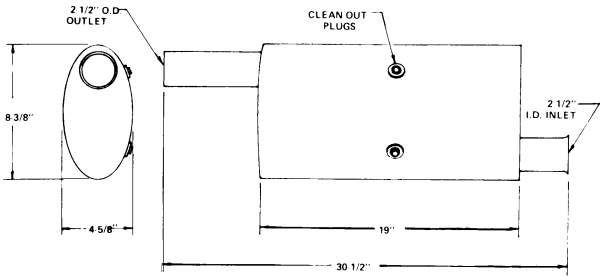

19773

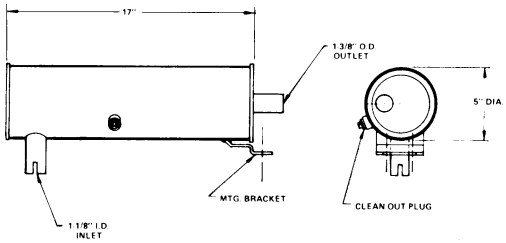

19820
20665
22904

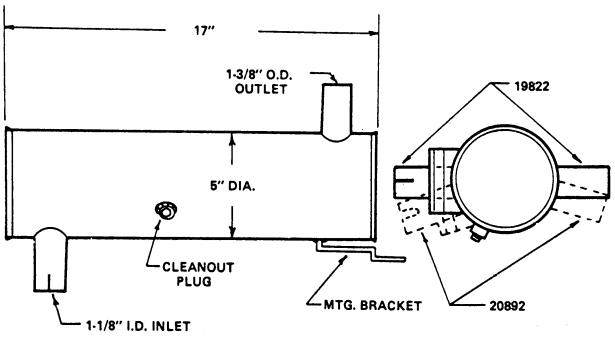

19822
20892A
20892B
20666

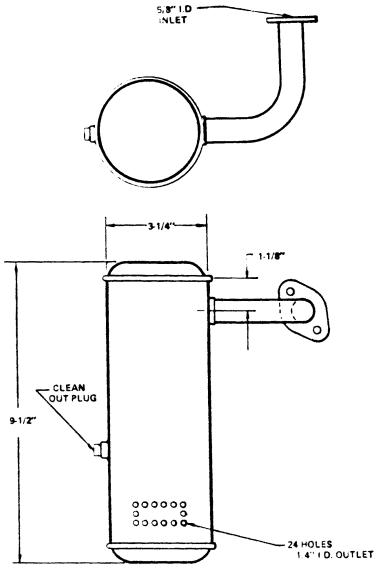

19825

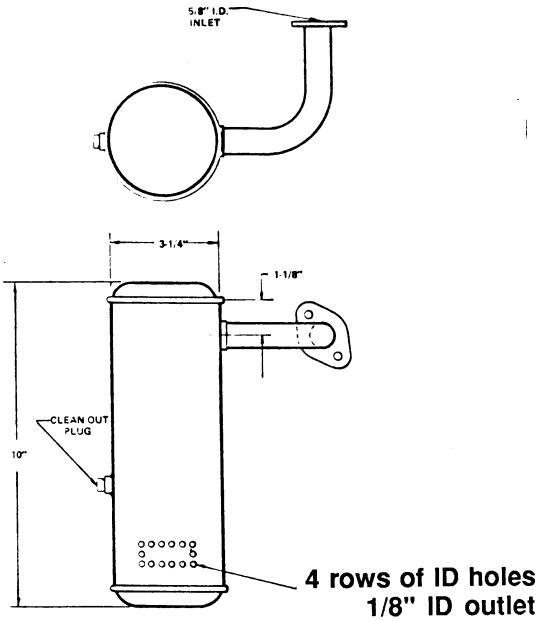

19826

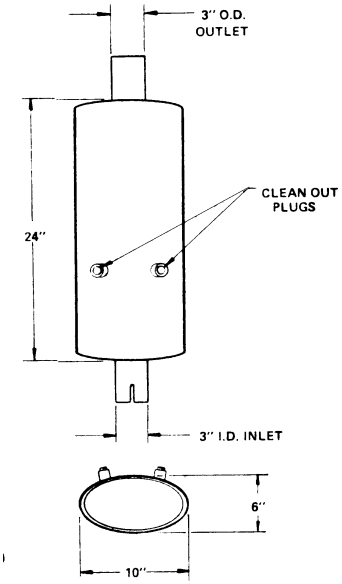

19830

NELSON *(continued)*

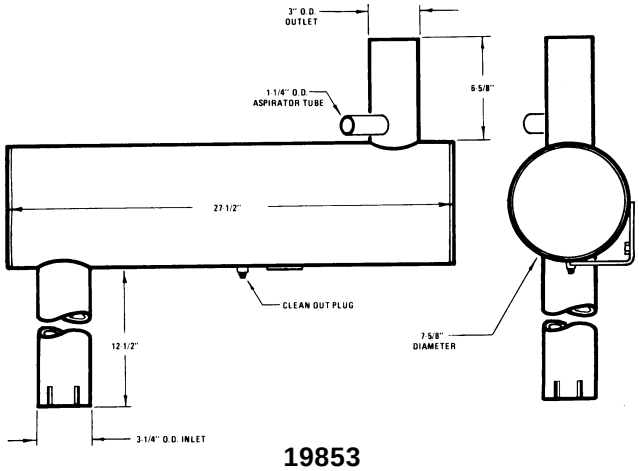

19853

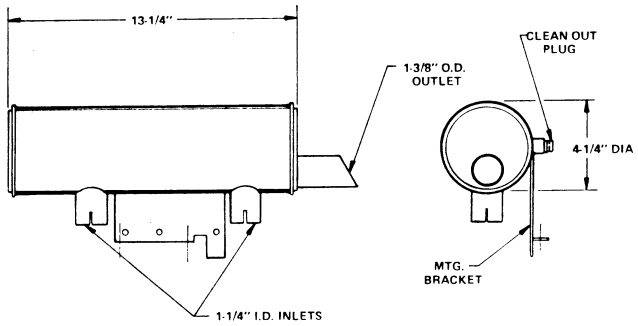

19941

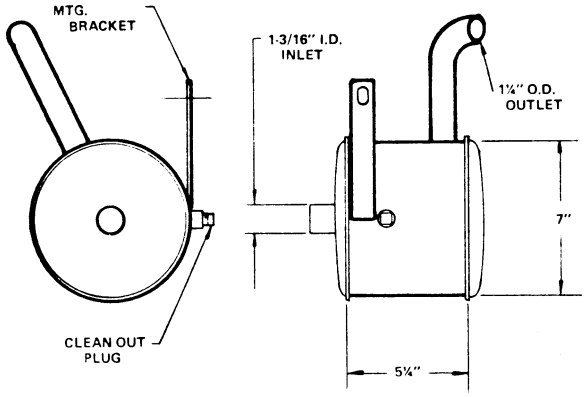

19973

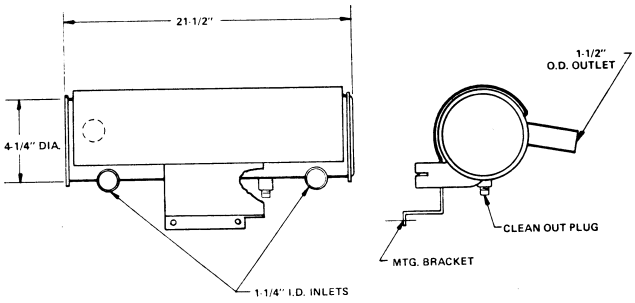

19975

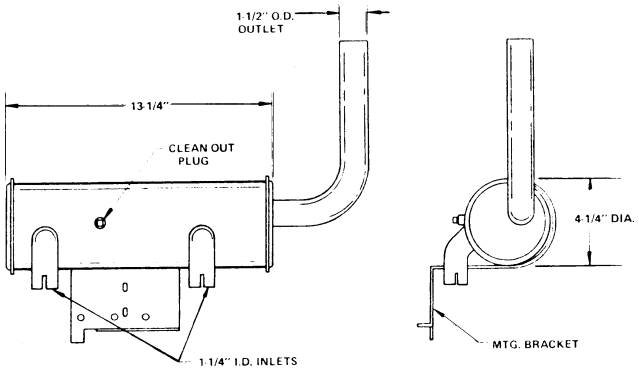

19976

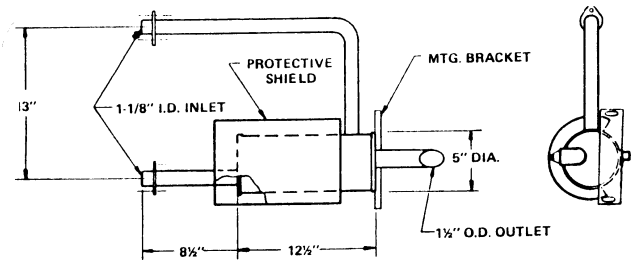

19994

NELSON *(continued)*

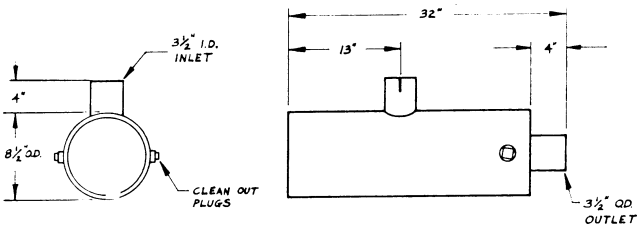

20069

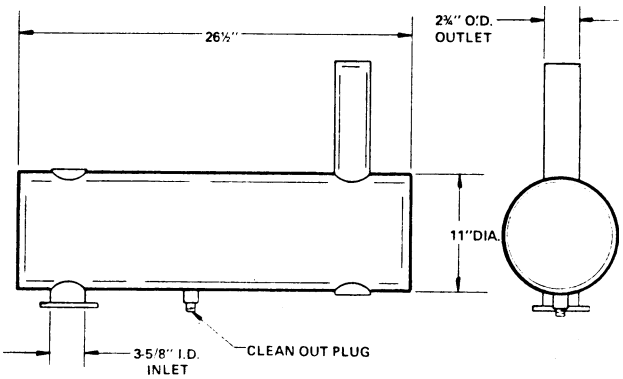

20072

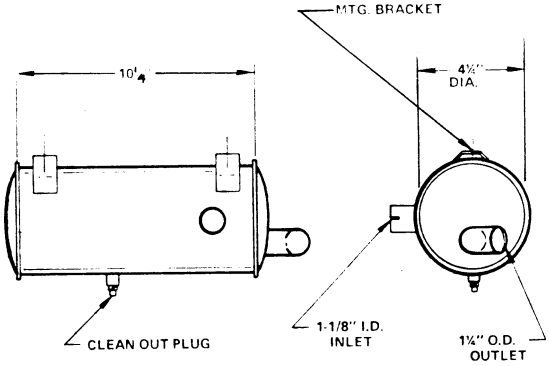

20147

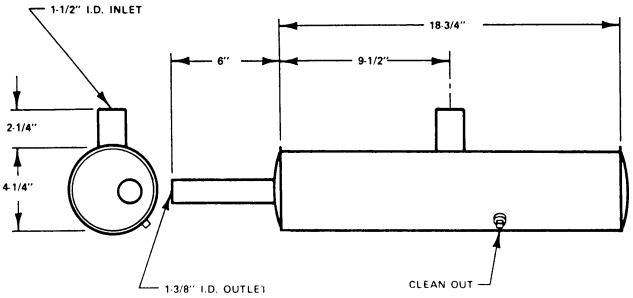

17898

Nelson 20343—same as 17898 except two clean out plugs
Nelson 20490 approved as Wacker WM80-58406

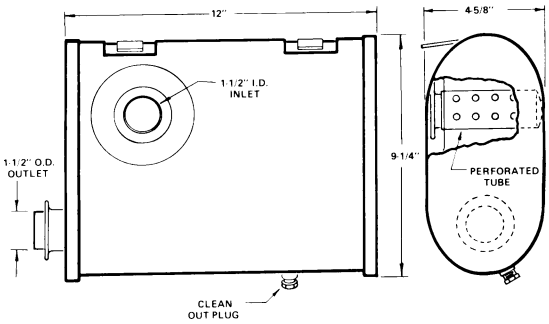

20513

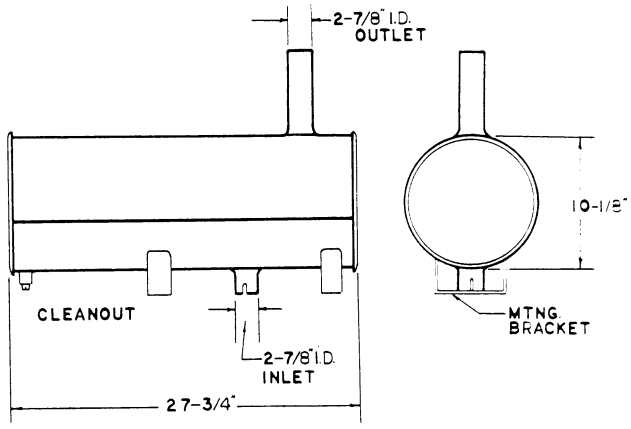

20519

NELSON *(continued)*

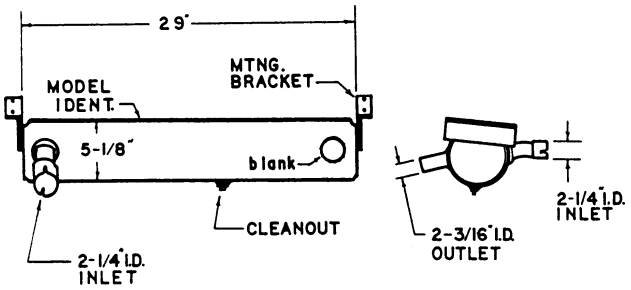

20539

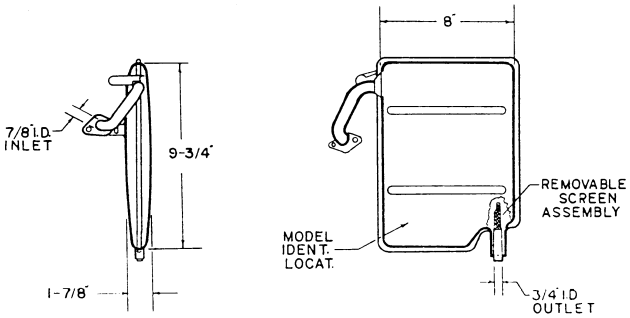

20578
23259A

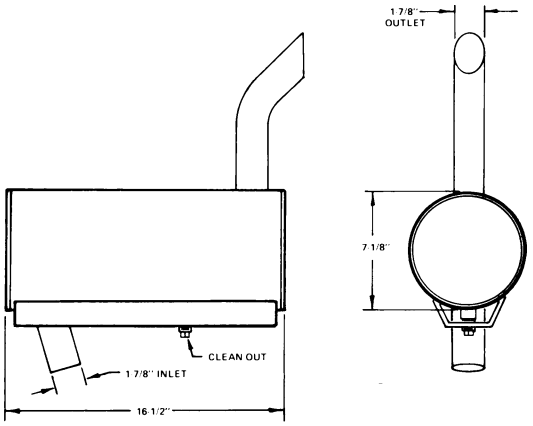

20608
22416

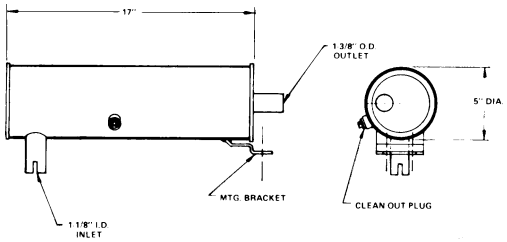

20665
19820

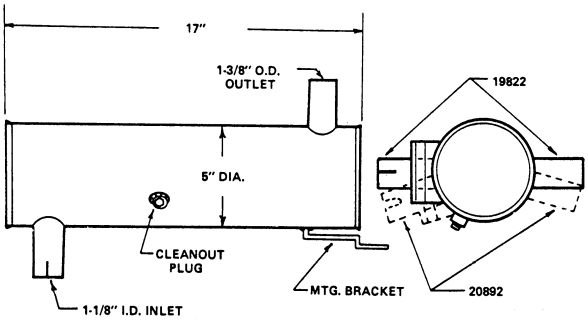

20666
19822
20892A
20892B

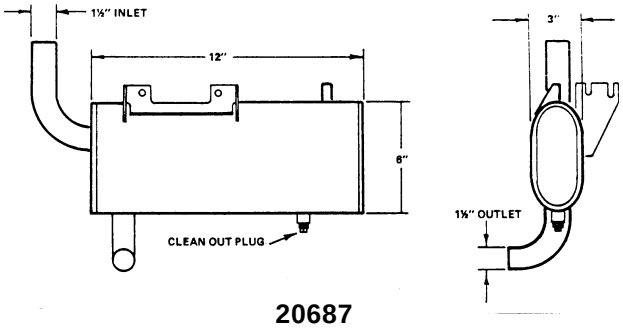

20687

NELSON *(continued)*

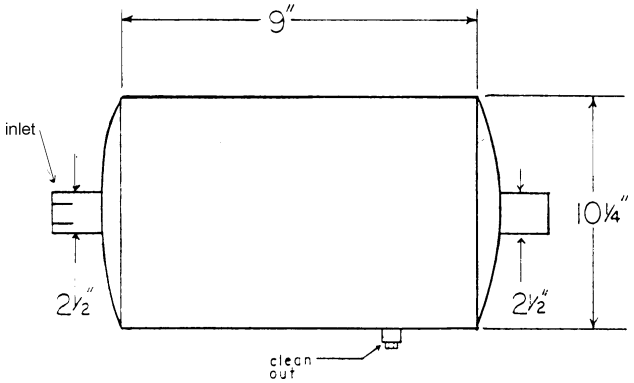

20710

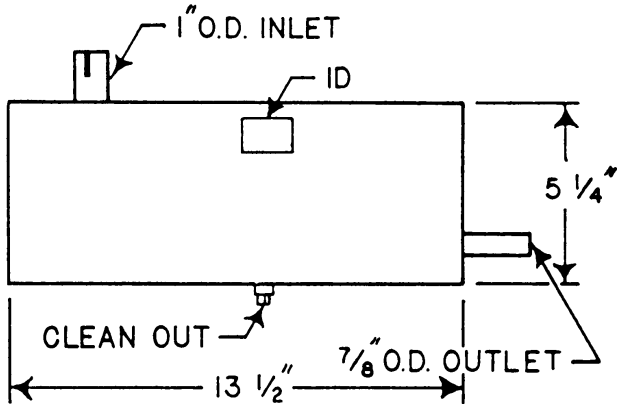

20788

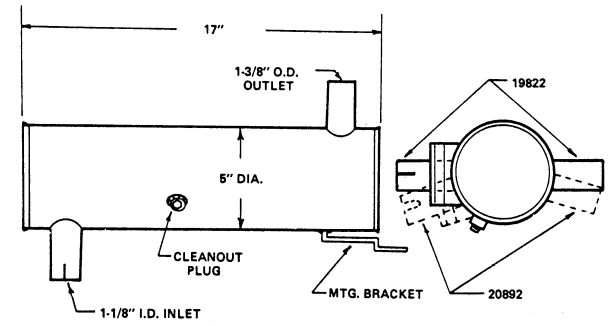

20892A
20892B
20666
19822

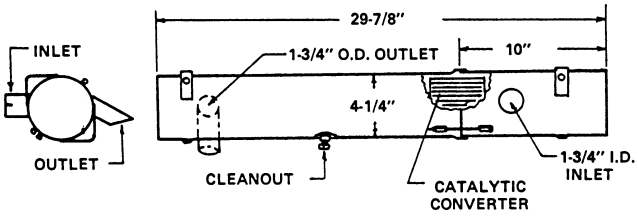

20952

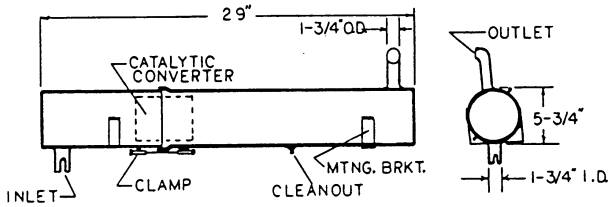

20953

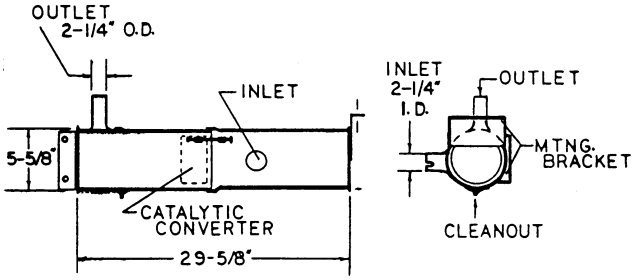

20954

NELSON *(continued)*

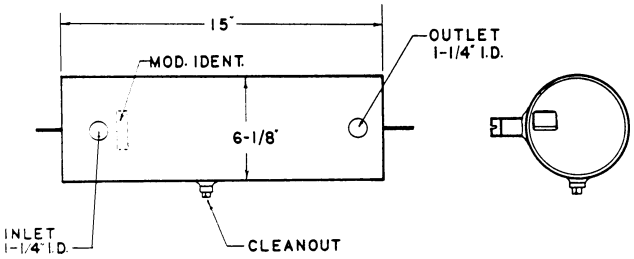

20965

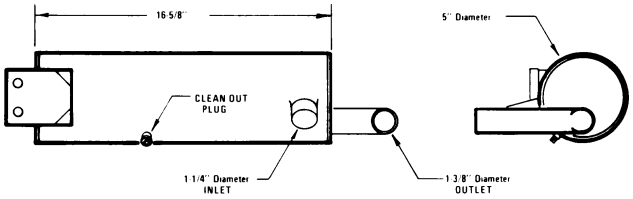

20990
20990B
23718

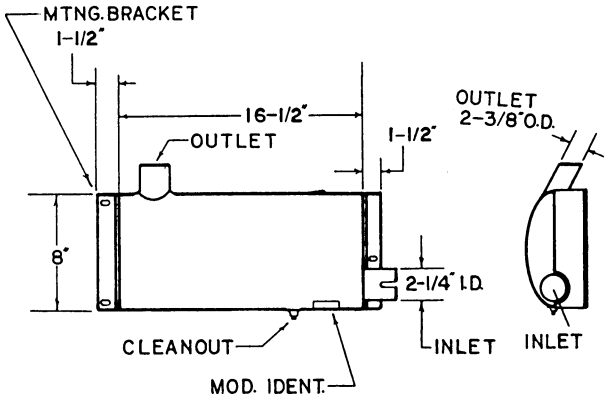

21140

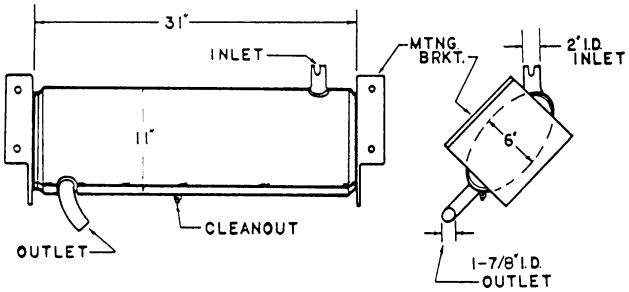

21161

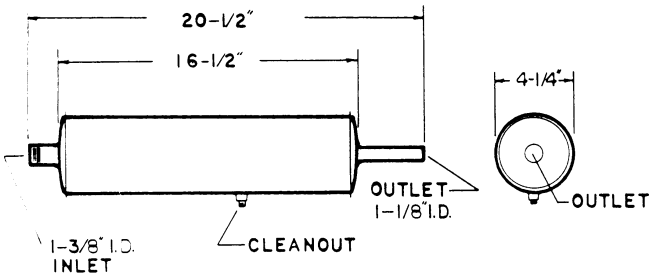

21279

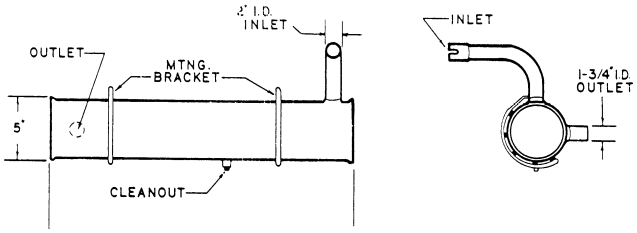

21341
23162

NELSON *(continued)*

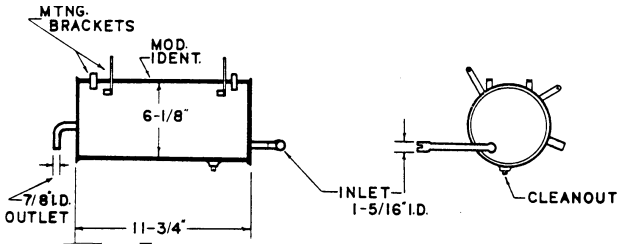

21721

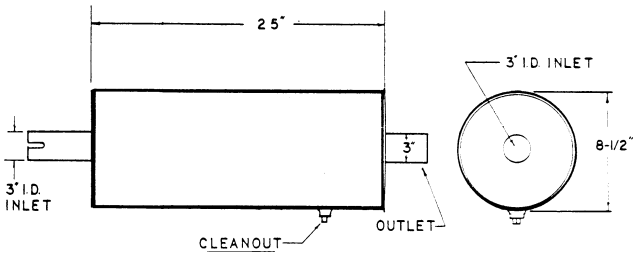

21758

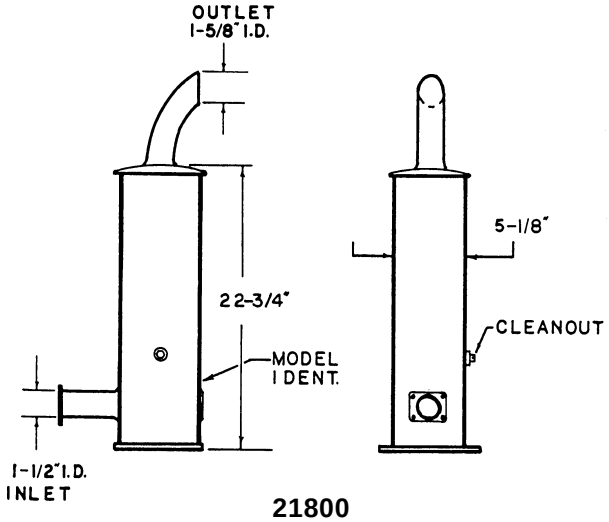

21800
21800A
21800C

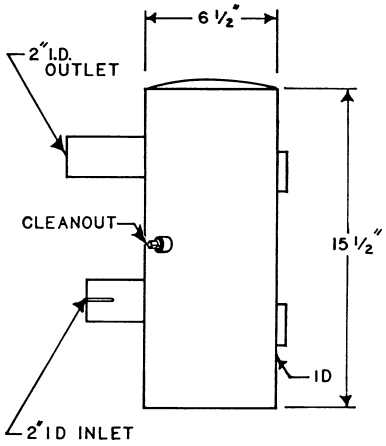

21863

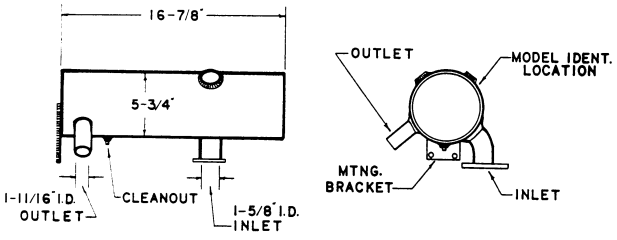

21884

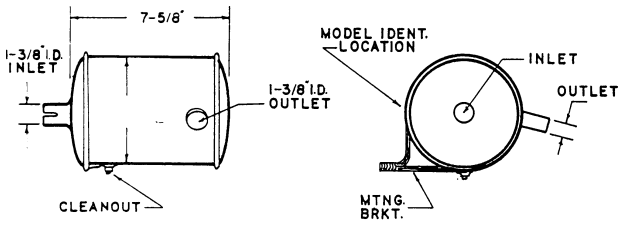

21928

NELSON *(continued)*

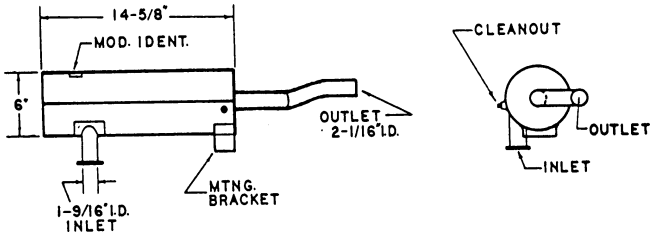

21950
21950B

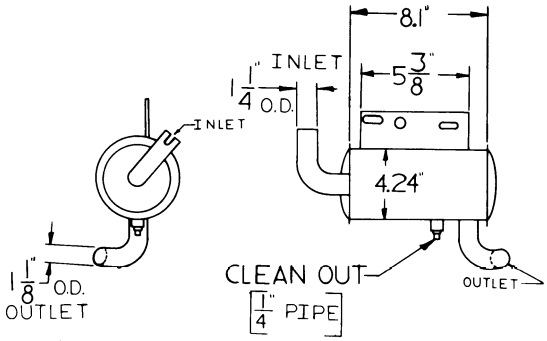

22157
16362

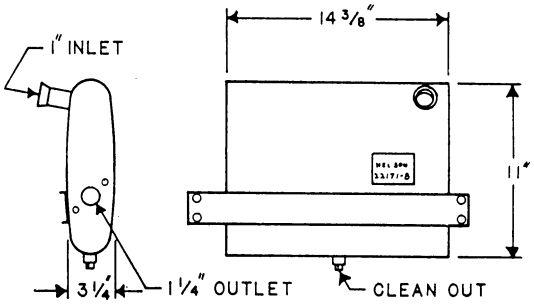

22171B

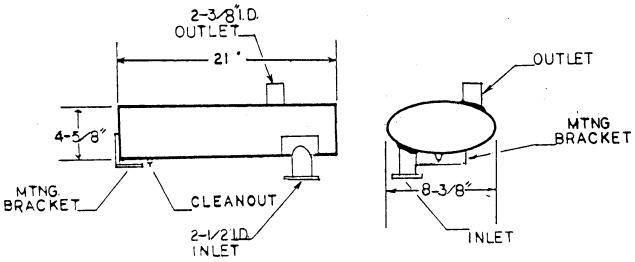

22255

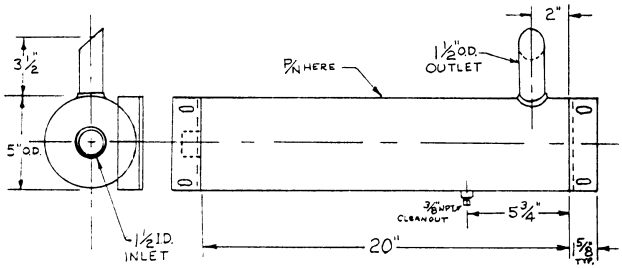

22389

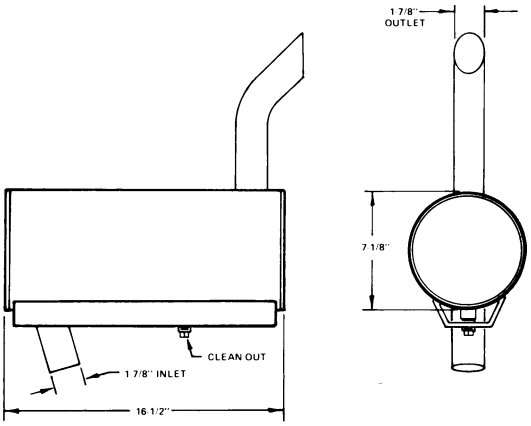

22416
20608

NELSON *(continued)*

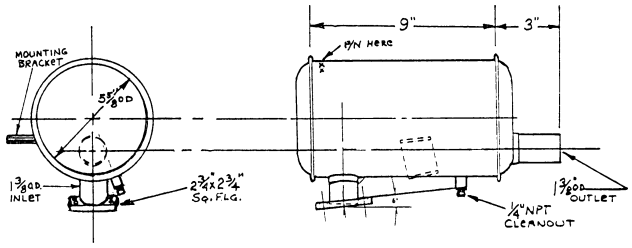

22506

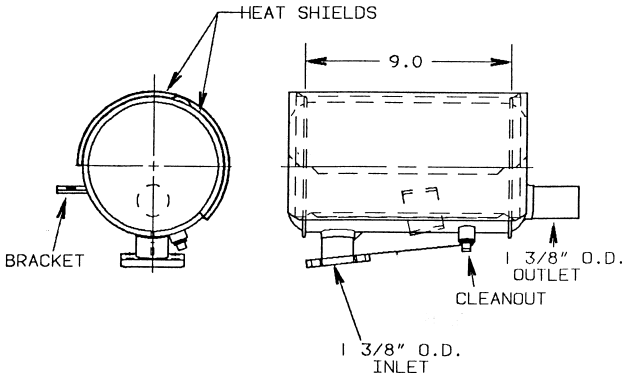

22506A

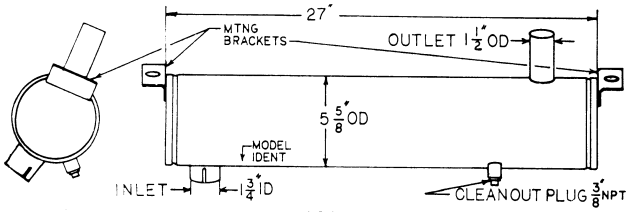

22627
24304

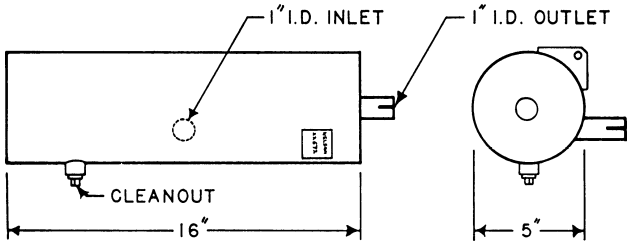

22671
22672

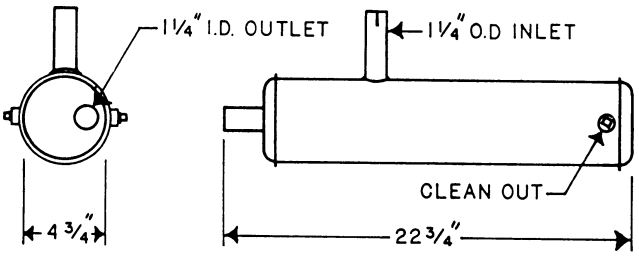

22755

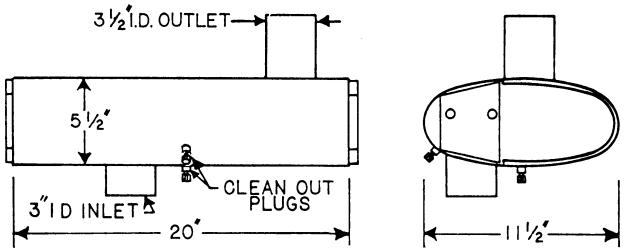

22807A

Nelson 22737—see Kohler 278224
Nelson 22755—see Kohler 279724
Nelson 22777—see Kohler 278223
Nelson 22801A—see modified Nelson 22171B

NELSON *(continued)*

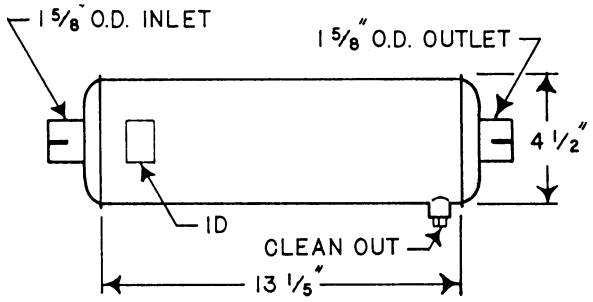

22823

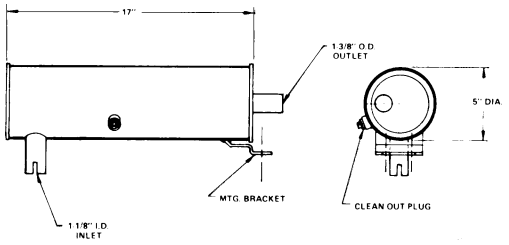

22904
19820
20665

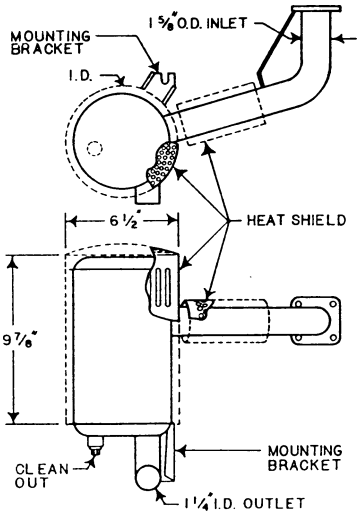

22917

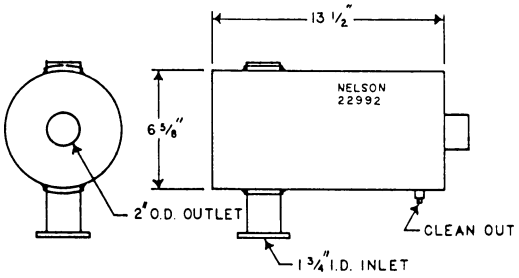

22992
22992A

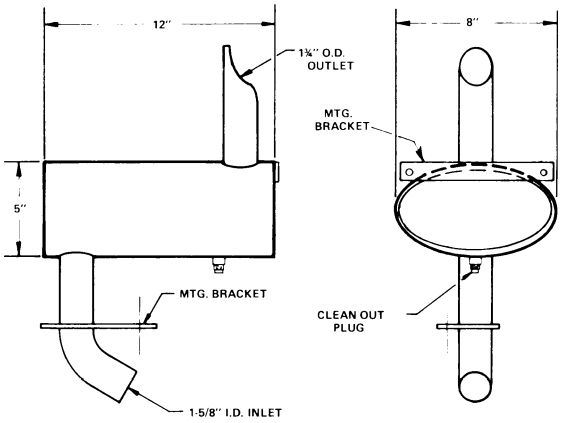

23094
19382

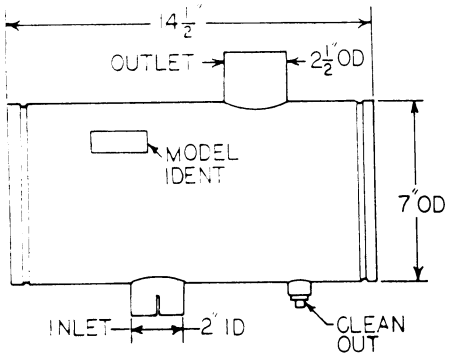

23096

NELSON *(continued)*

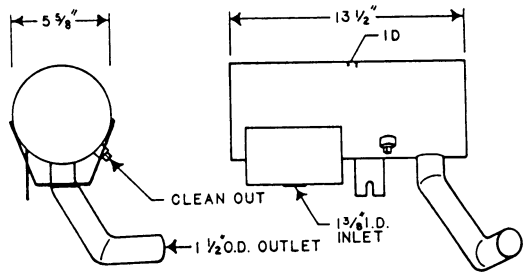

23137

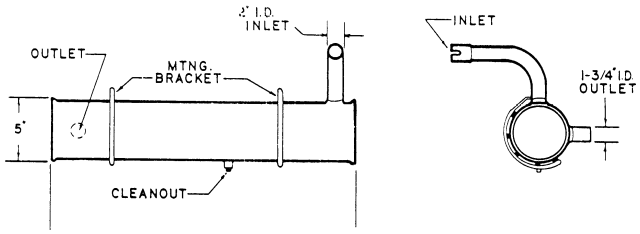

23162
21341

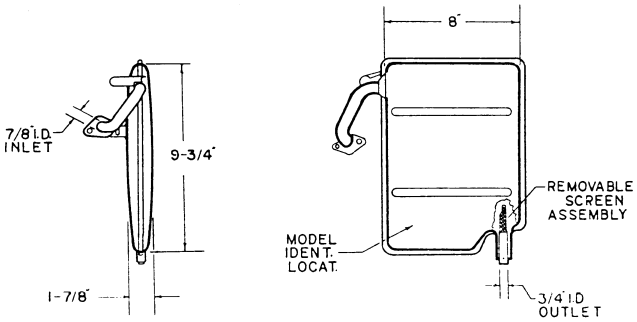

23259A
20578

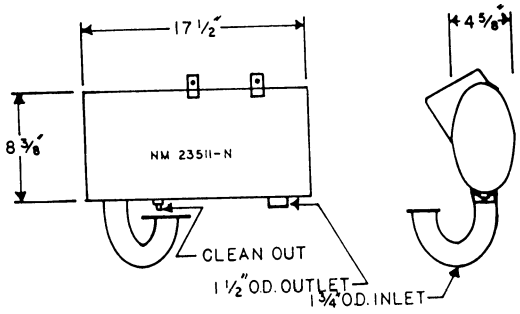

23511A

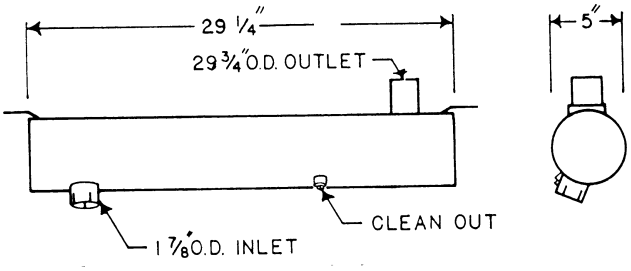

23643

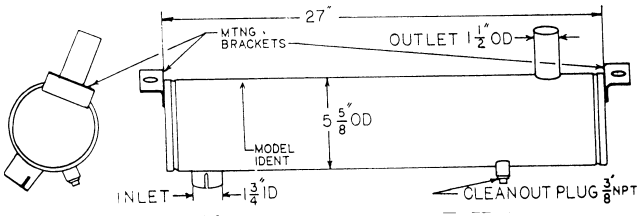

23697

NELSON *(continued)*

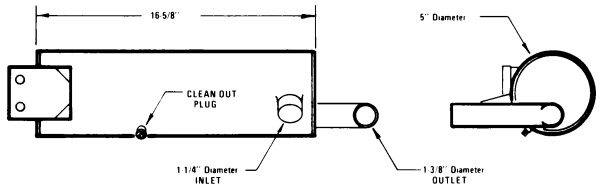

23718
20990
20990B

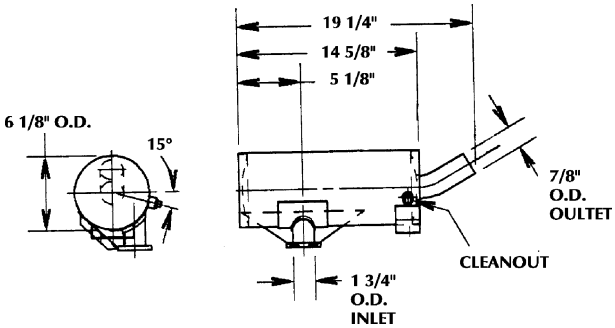

23746

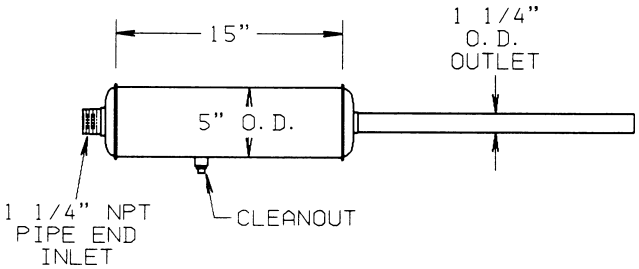

23843

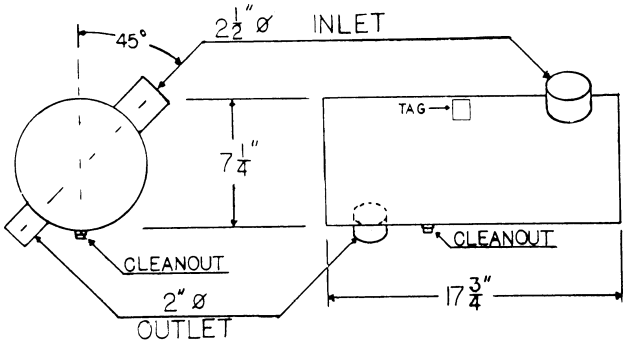

23852

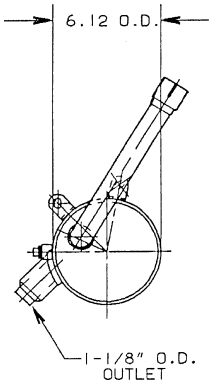

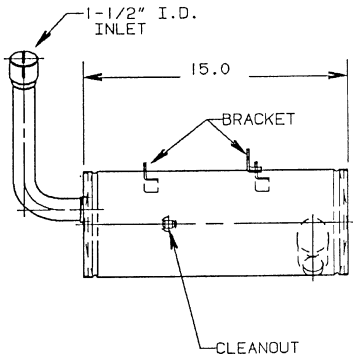

23860

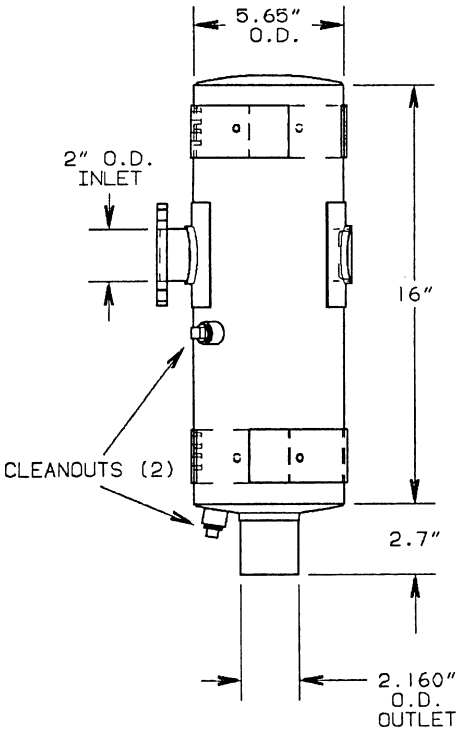

23893
INVERTED BODY

NELSON *(continued)*

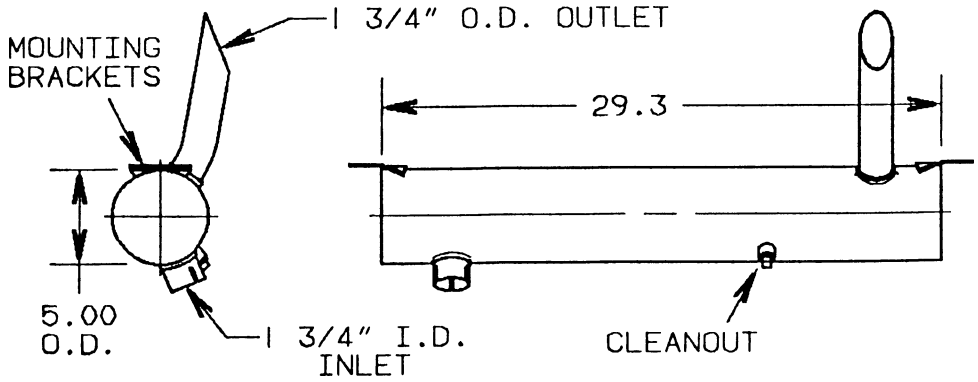

24035

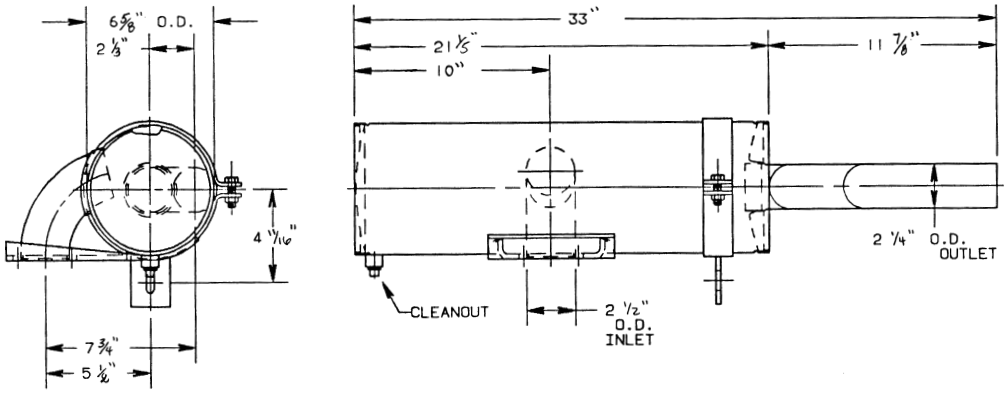

24083

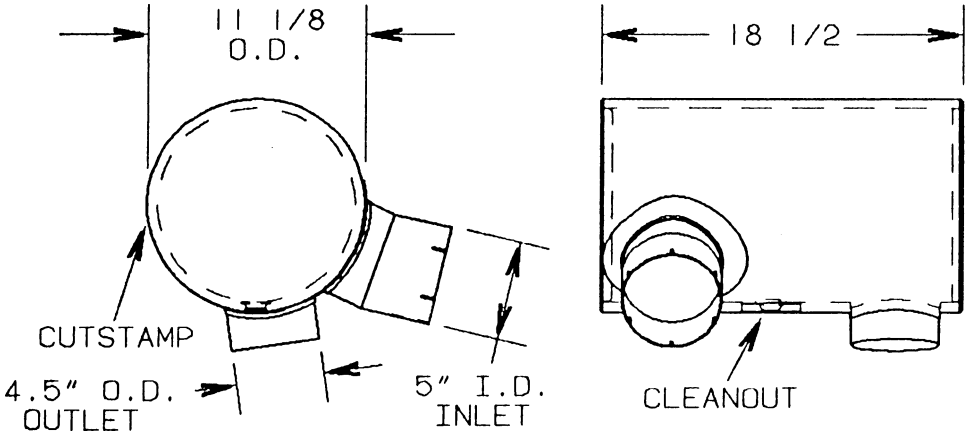

24148

NELSON *(continued)*

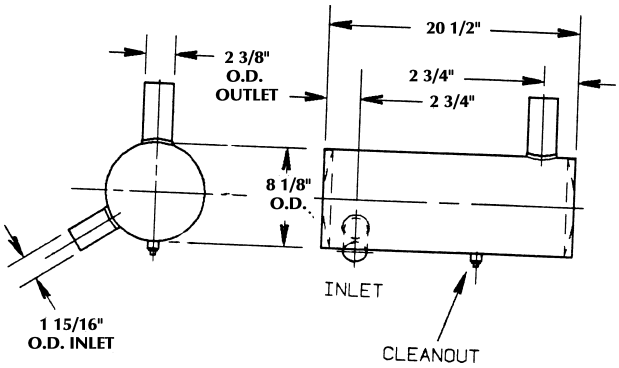

24180

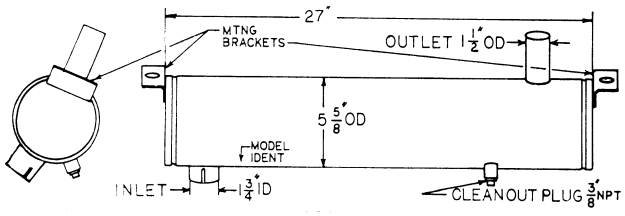

24304
22627

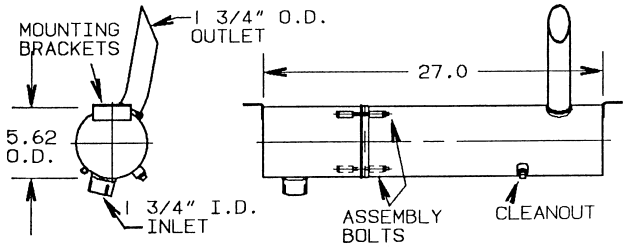

24379

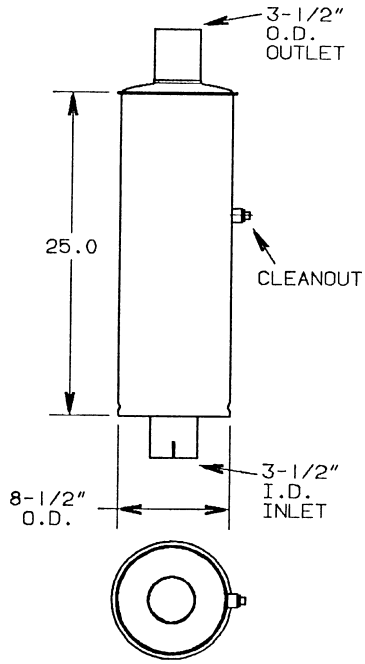

24459

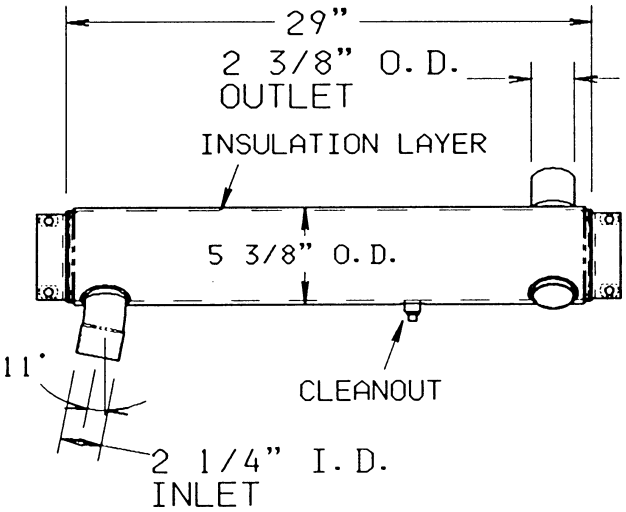

24707

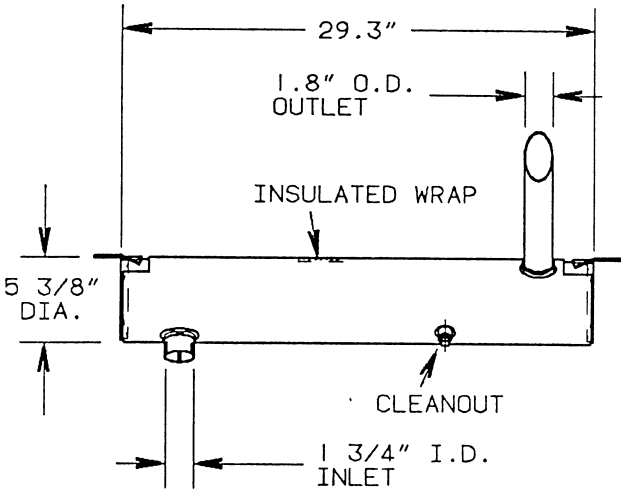

24710

NELSON *(continued)*

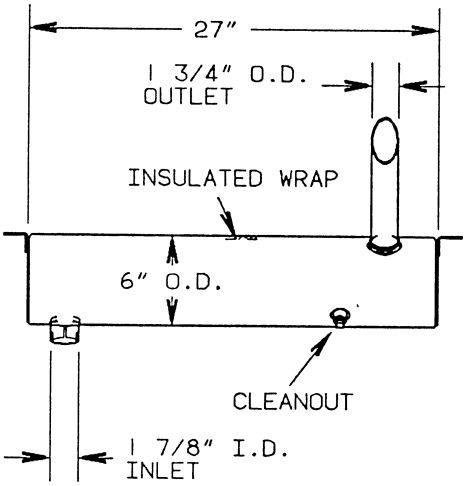

24711

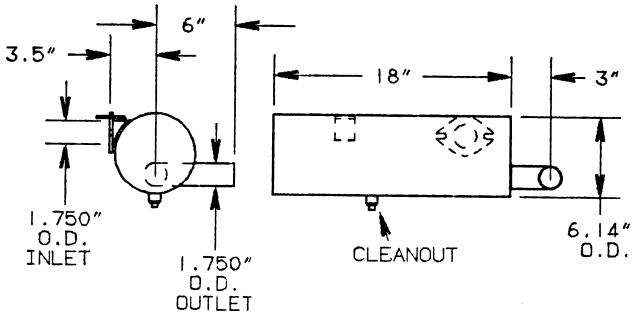

24745

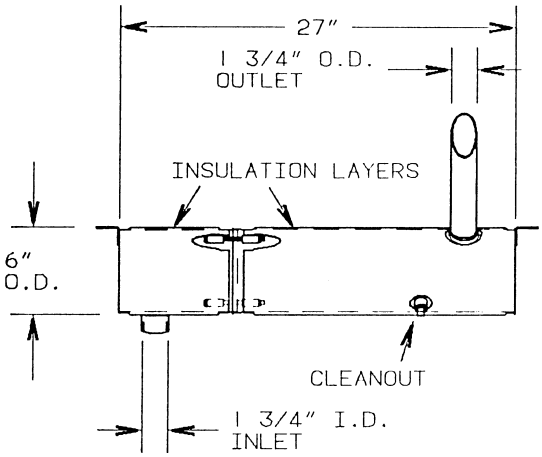

24752

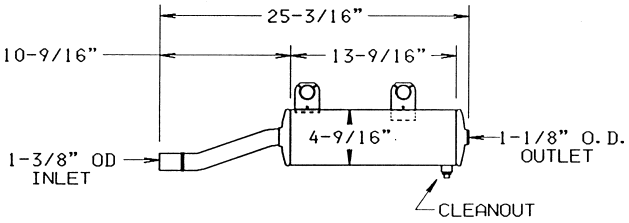

24756N

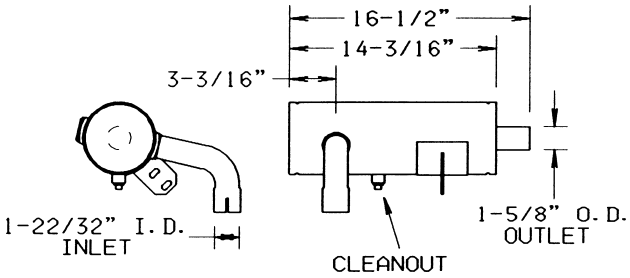

24800

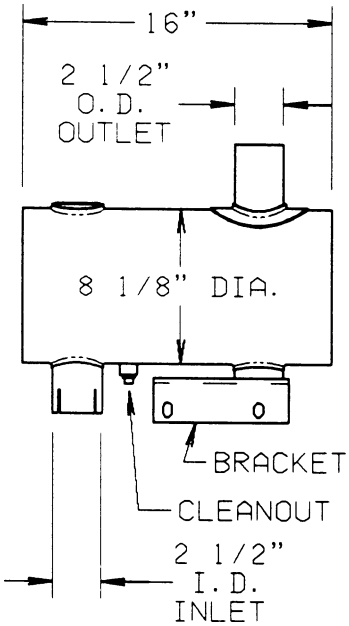

24839

NELSON *(continued)*

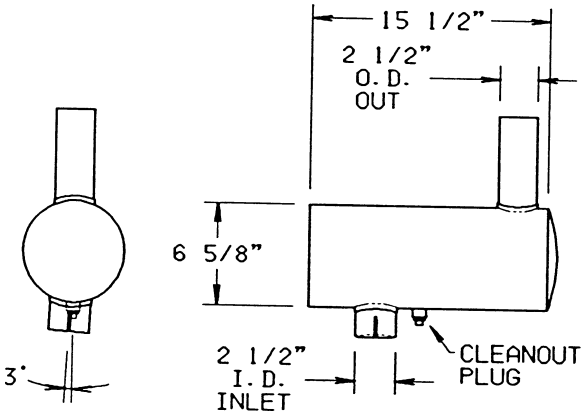

24842

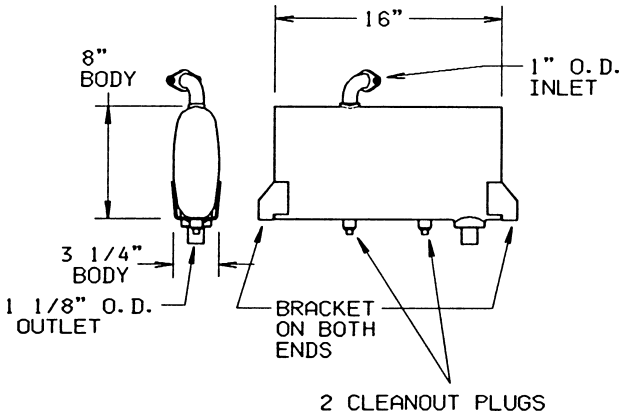

24866B

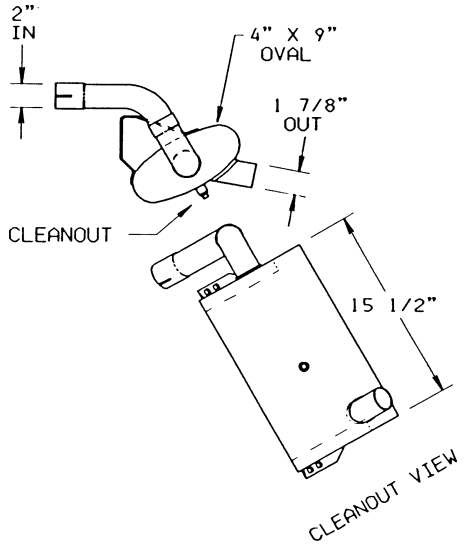

24931

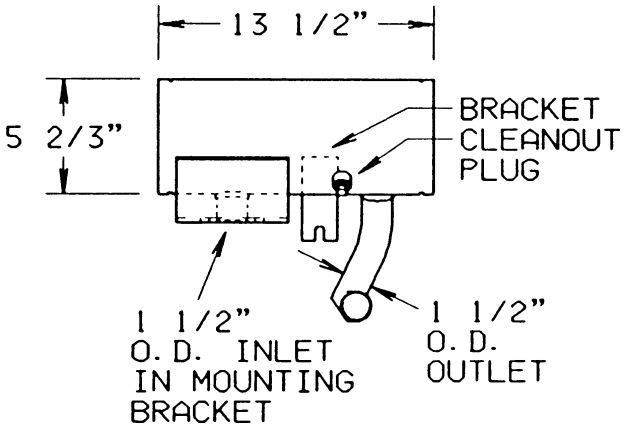

24953

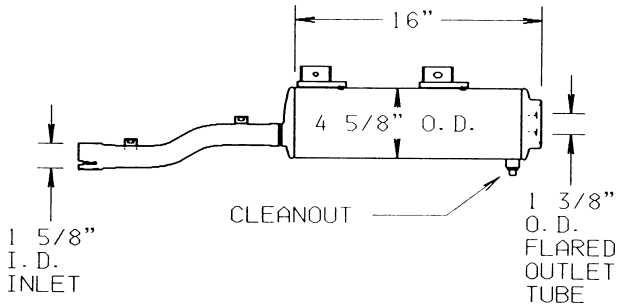

25007

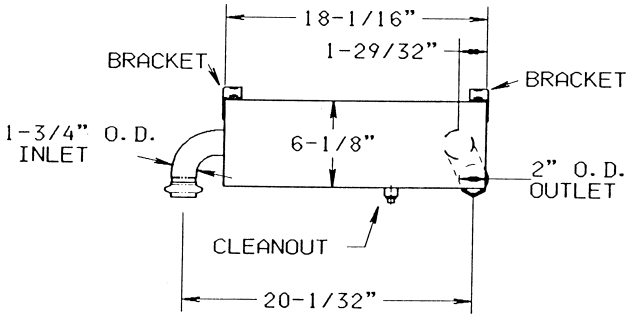

25012

NELSON *(continued)*

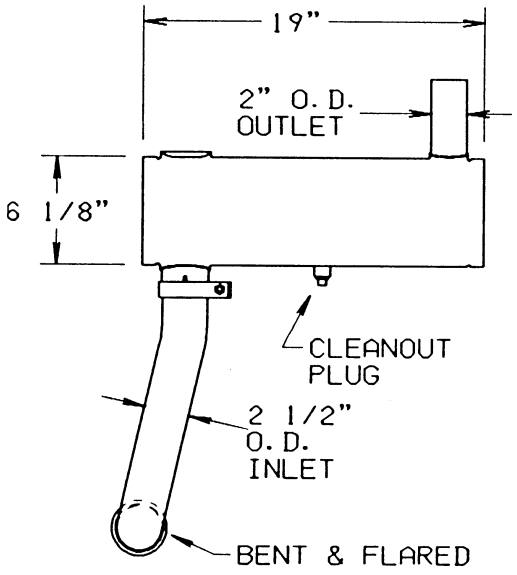

25026

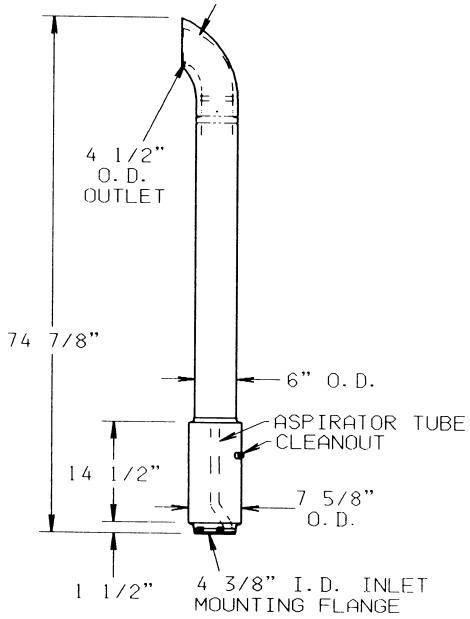

25133

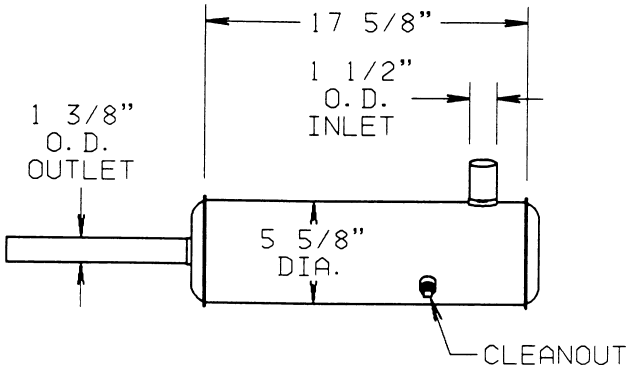

25191

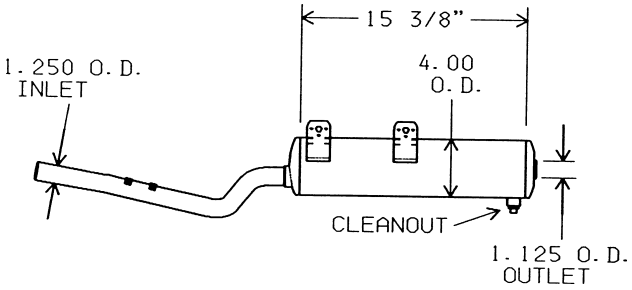

25237

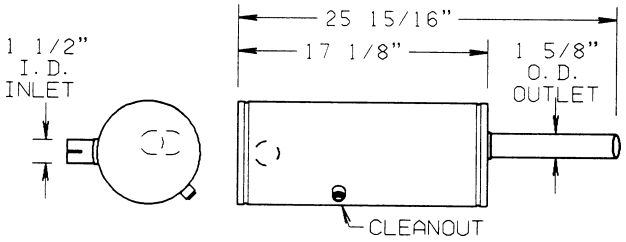

25239A

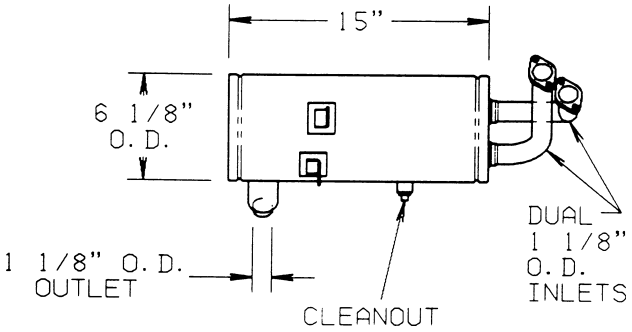

25602A

NELSON *(continued)*

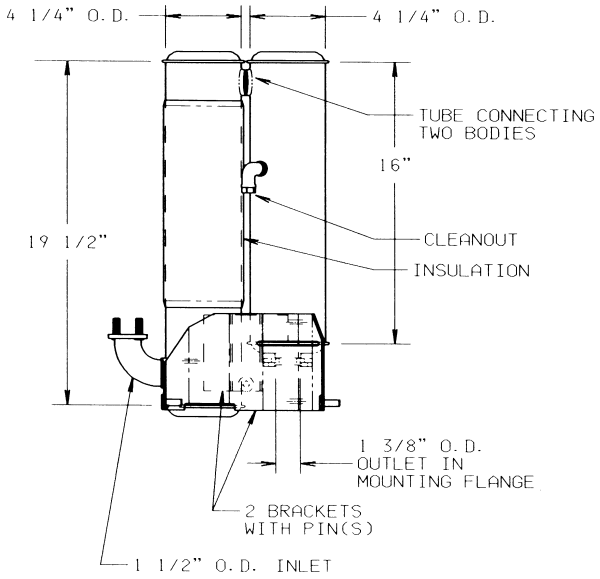

25640

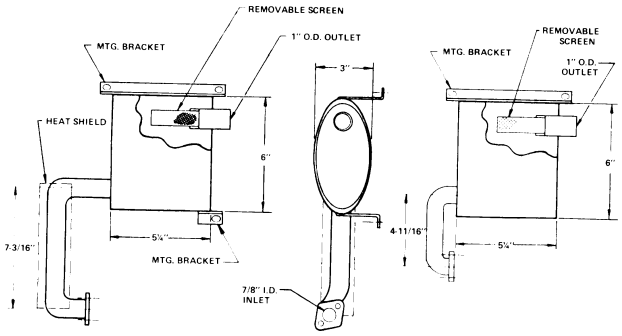

25766 SCREEN ASSEMBLY

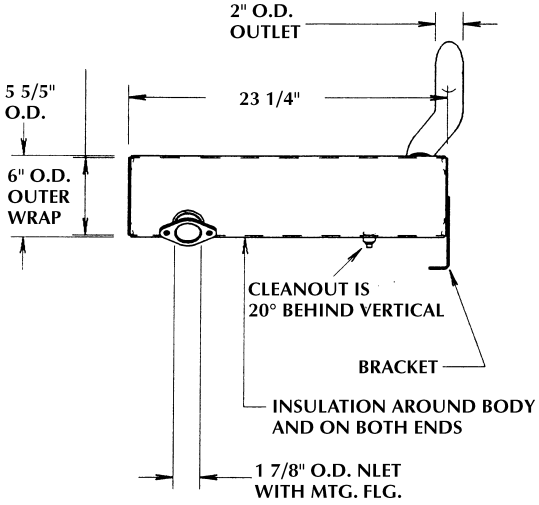

25771

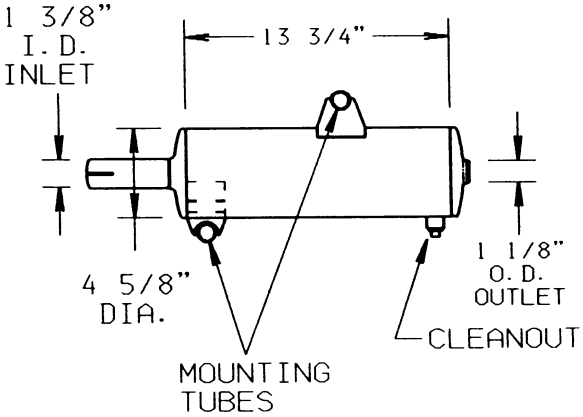

25868N

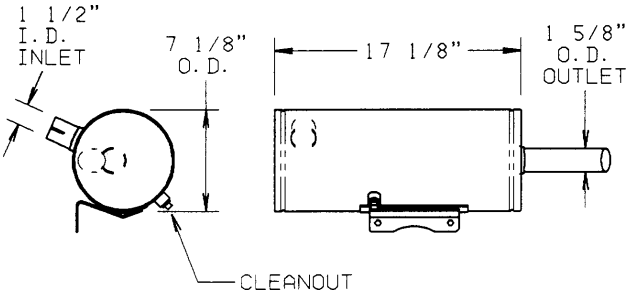

25986

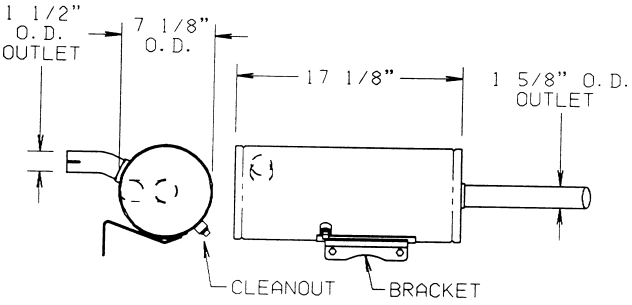

26147

NELSON *(continued)*

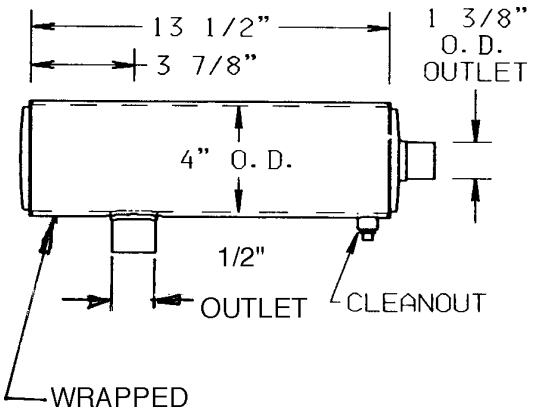

26201A

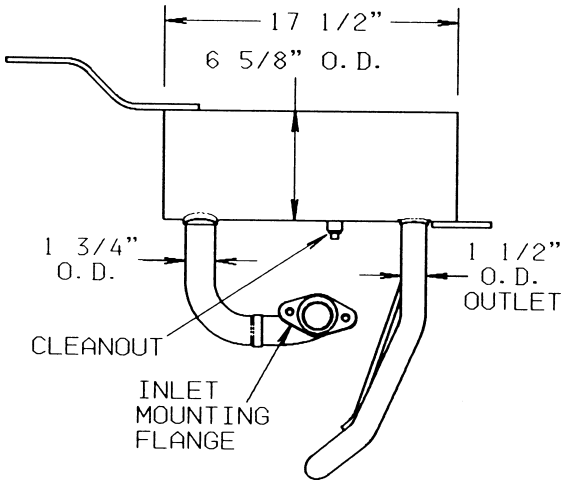

26294

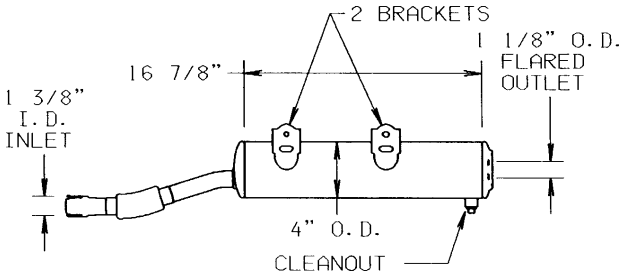

HONDA-NELSON 26296

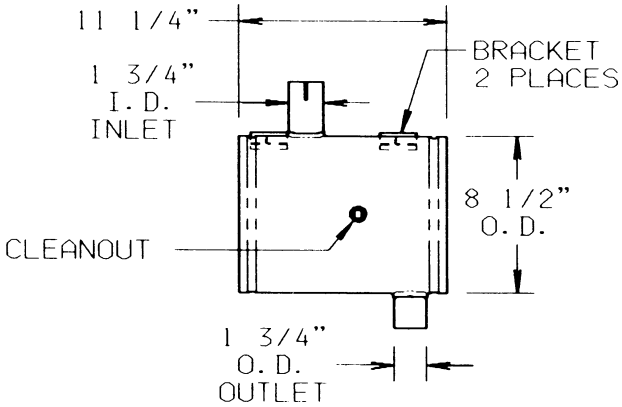

26359

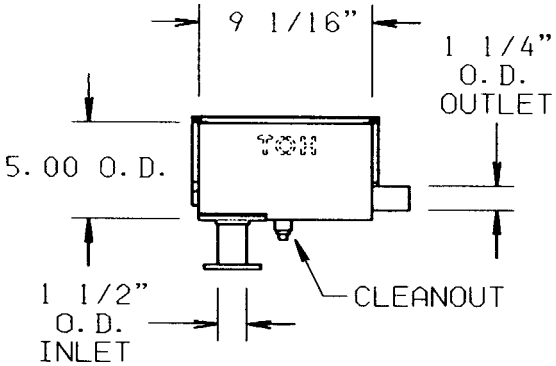

26438

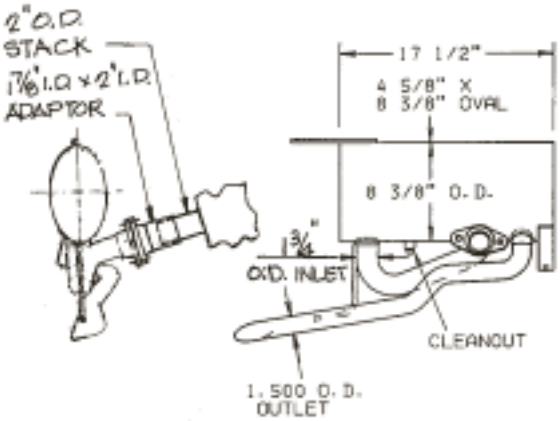

26454

NELSON *(continued)*

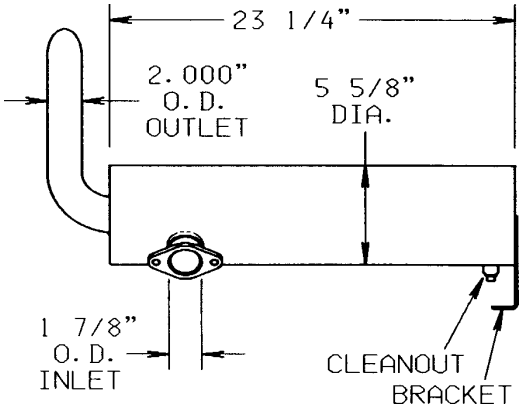

26465

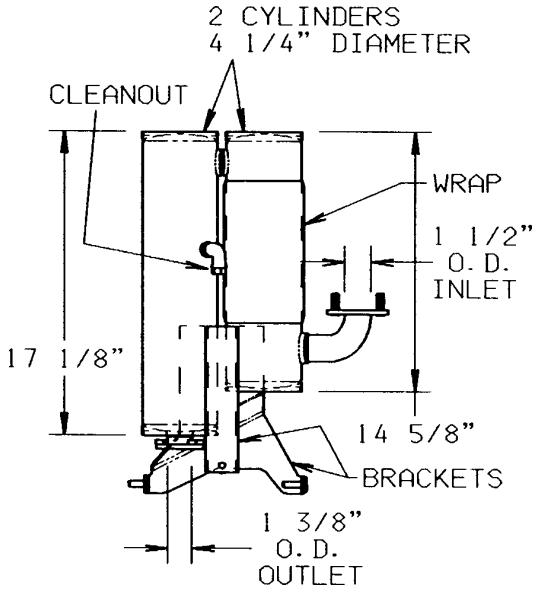

26503
ONAN 0155-3110

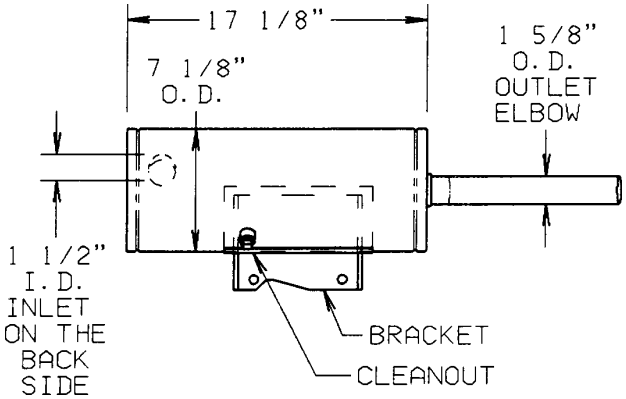

26617

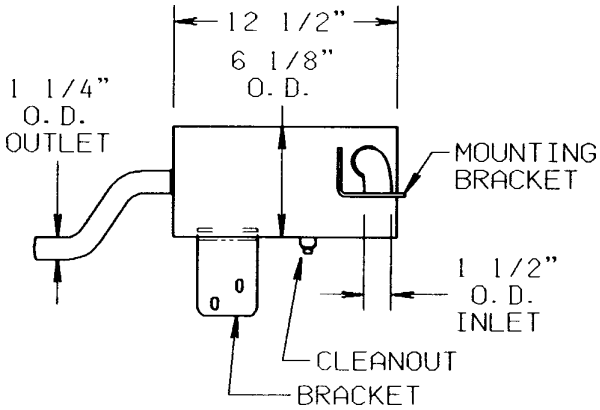

26749

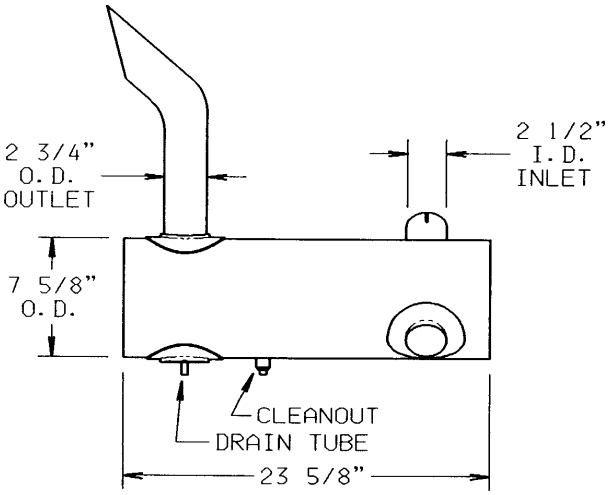

26875

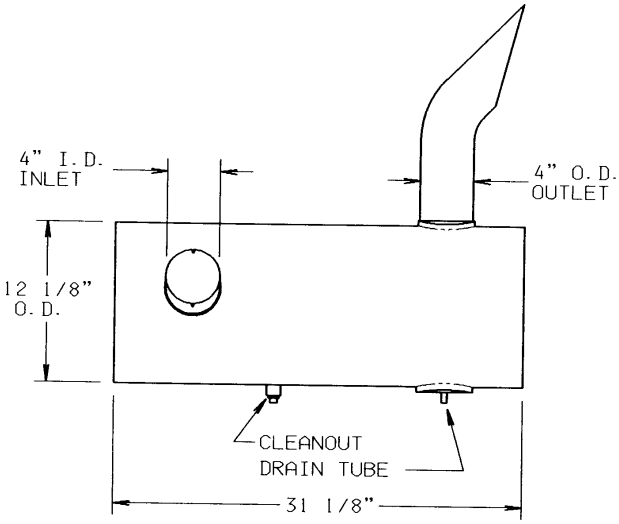

26876

NELSON *(continued)*

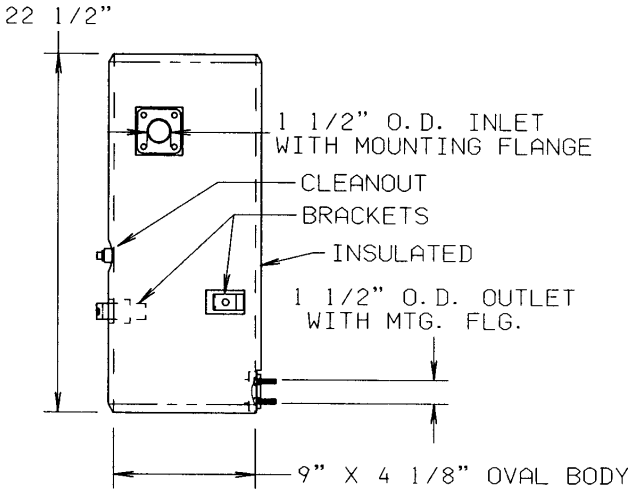

26897
ONAN 155-3151

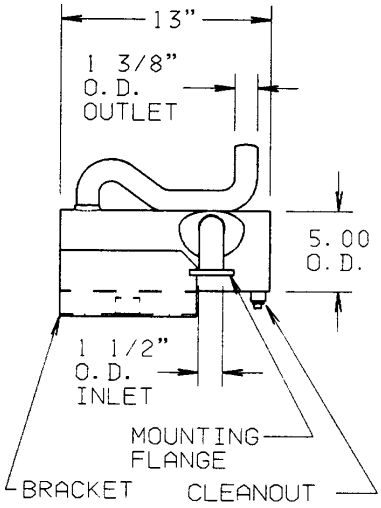

27021

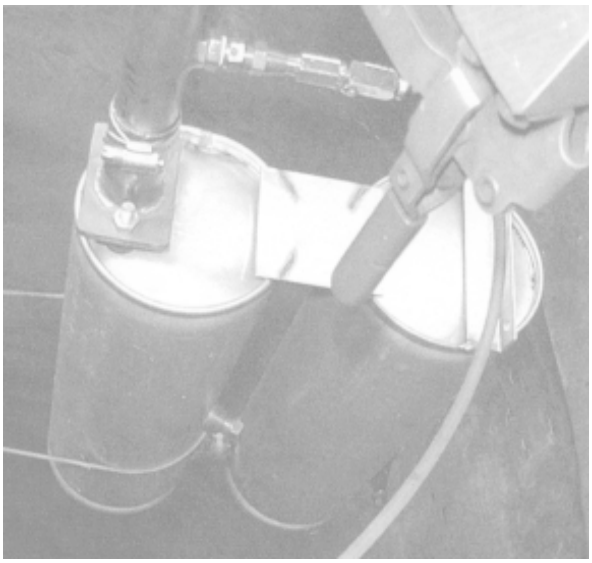

27137

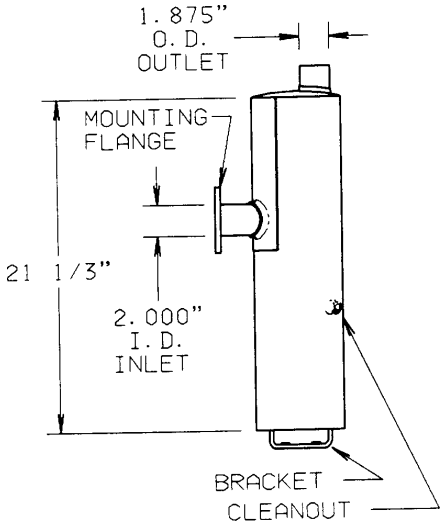

27173

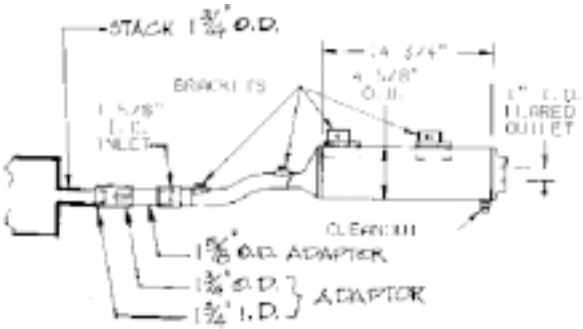

27174

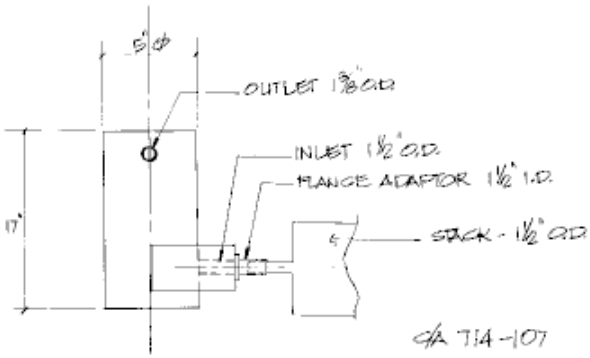

27196A

NELSON *(continued)*

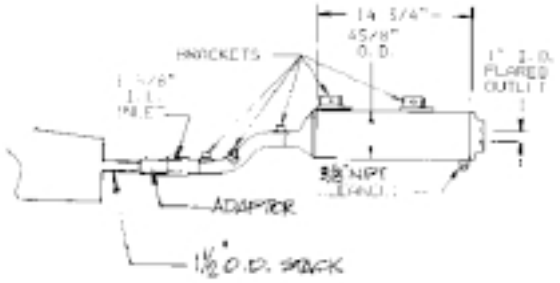

27222

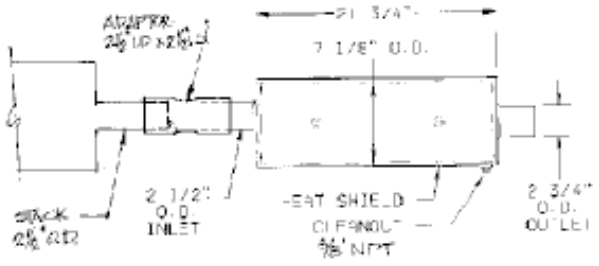

27404A

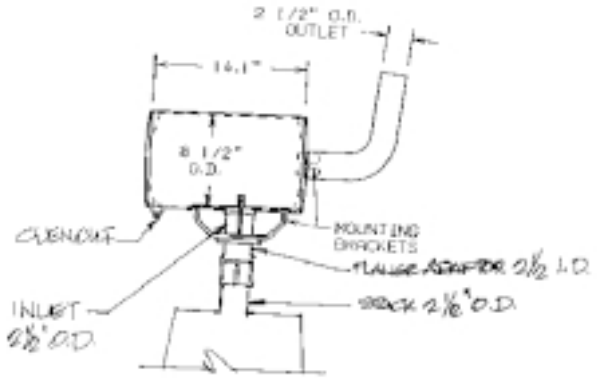

27453
27453A

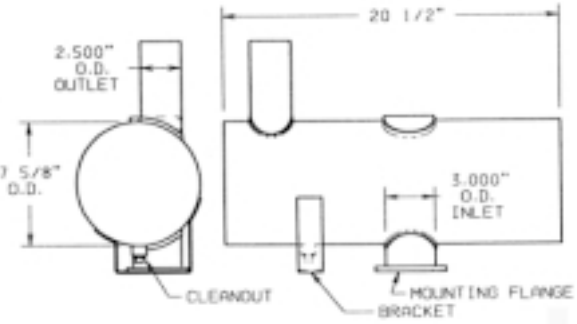

27475

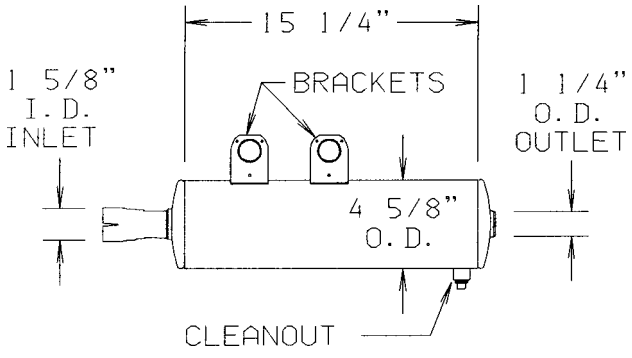

27522

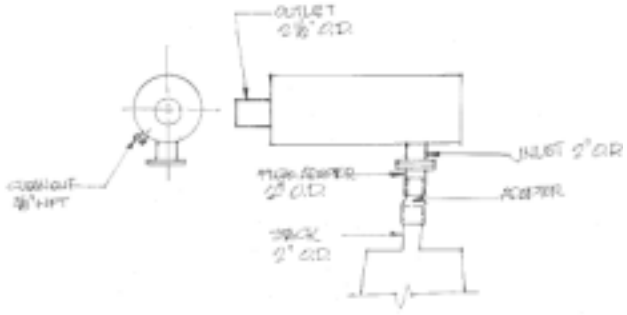

27543A

NELSON *(continued)*

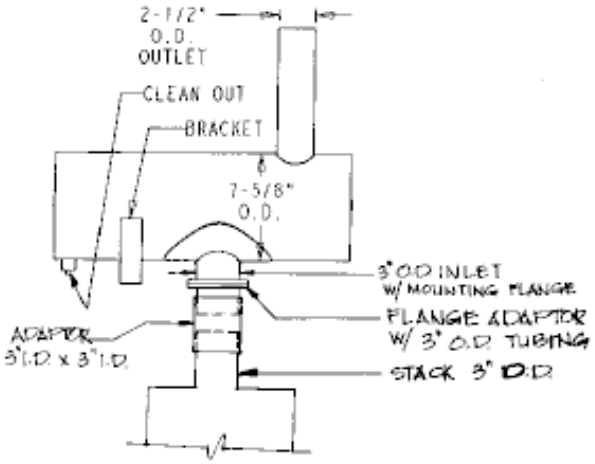

27692

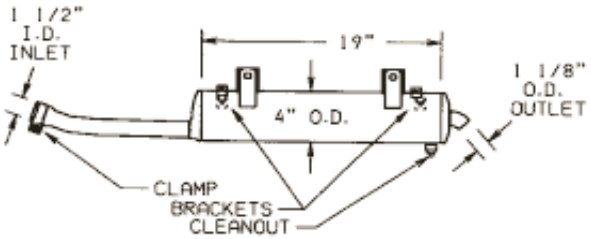

27780

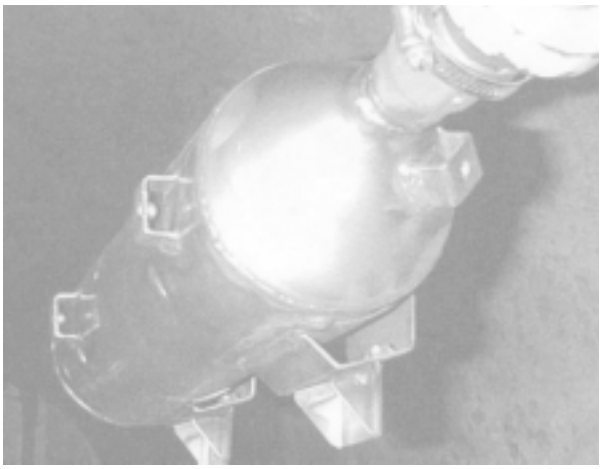

27890

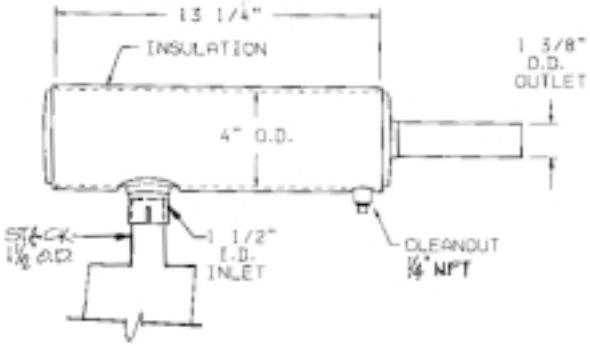

27901

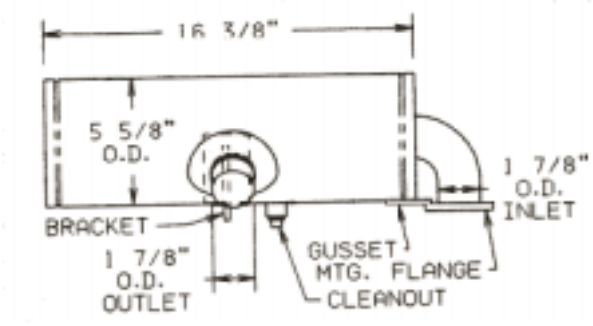

27906

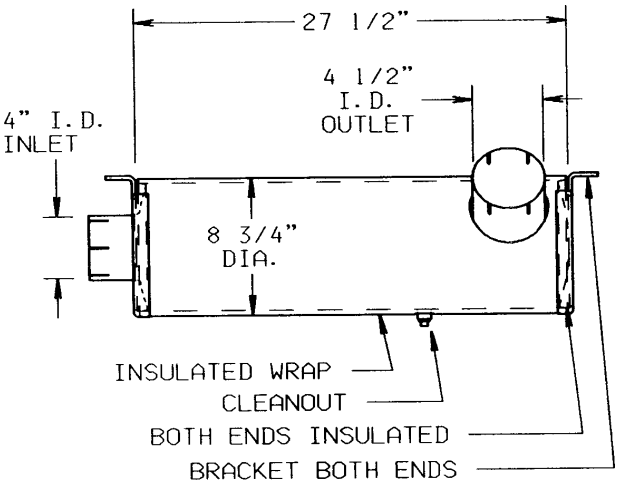

28057N

NELSON *(continued)*

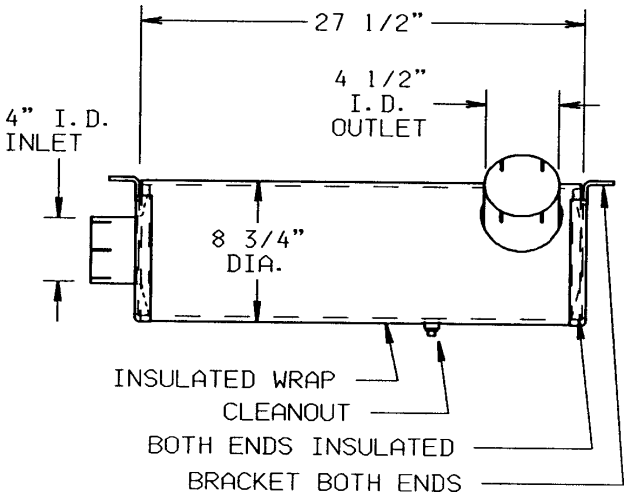

28061N

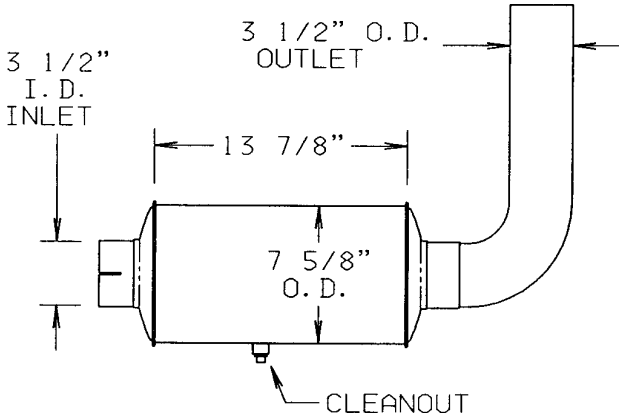

28070N

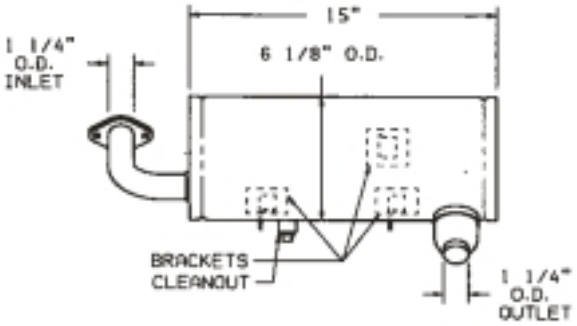

28151

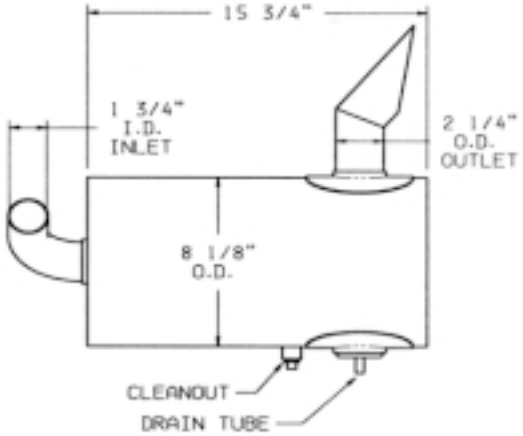

28186

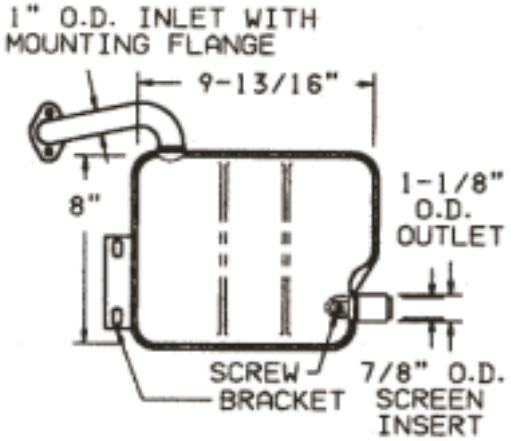

28416

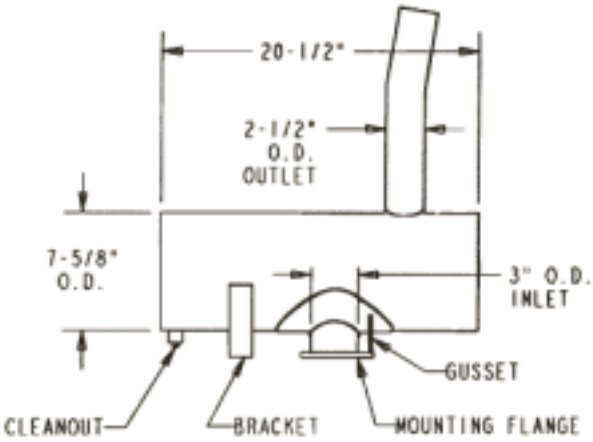

28457

NELSON *(continued)*

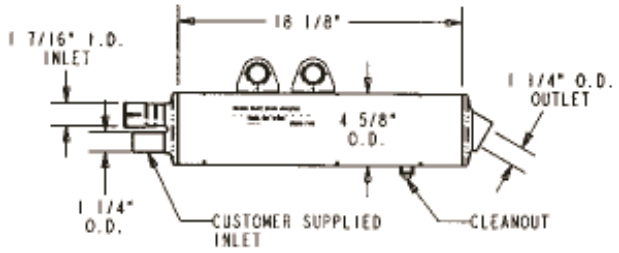

28472

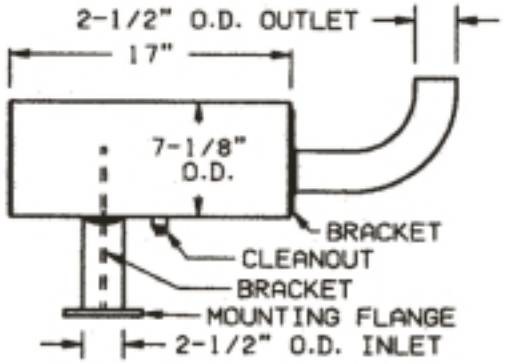

28478A
28479A

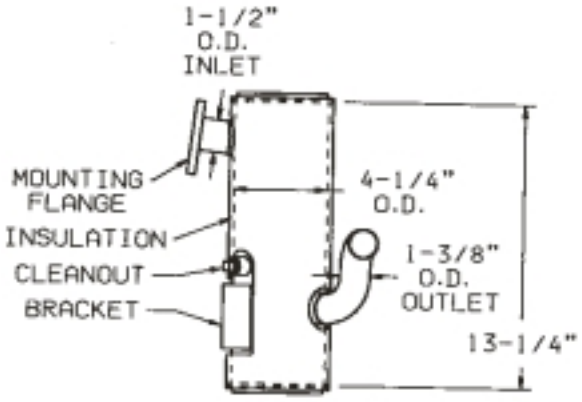

28619

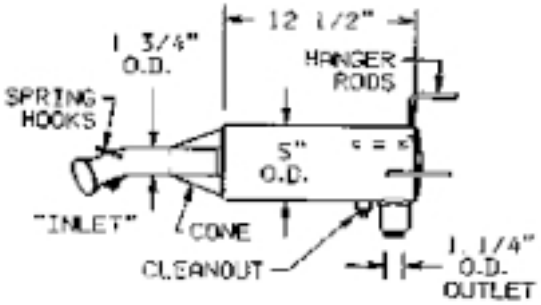

29222

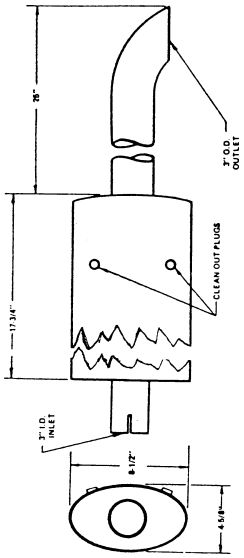

30134

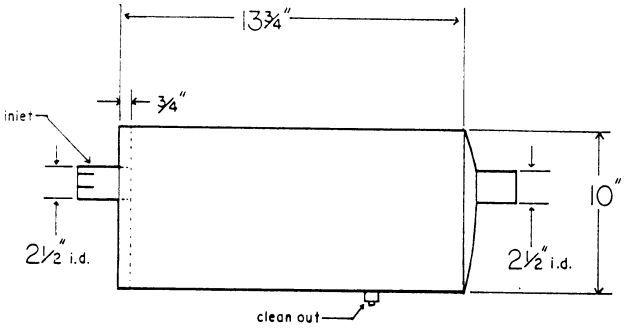

30670

NELSON *(continued)*

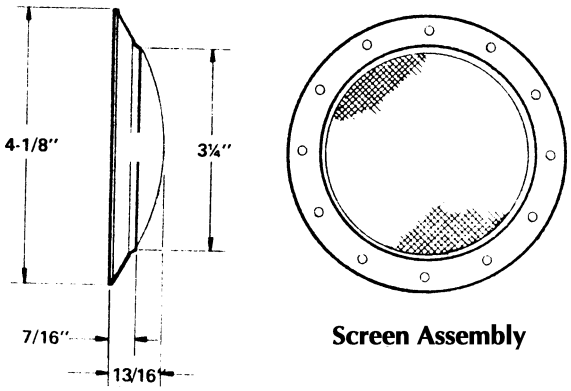

35347

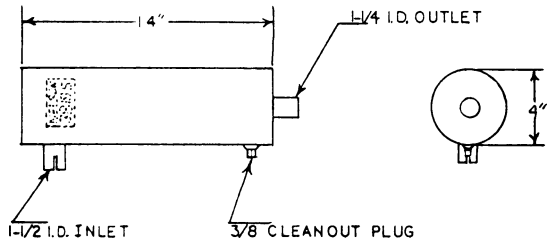

38195

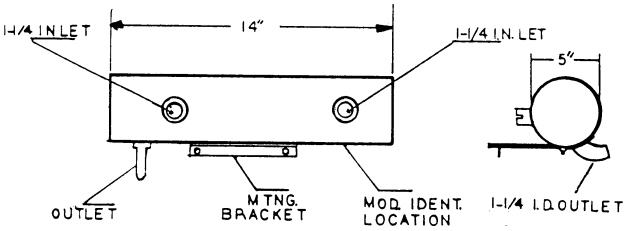

38196

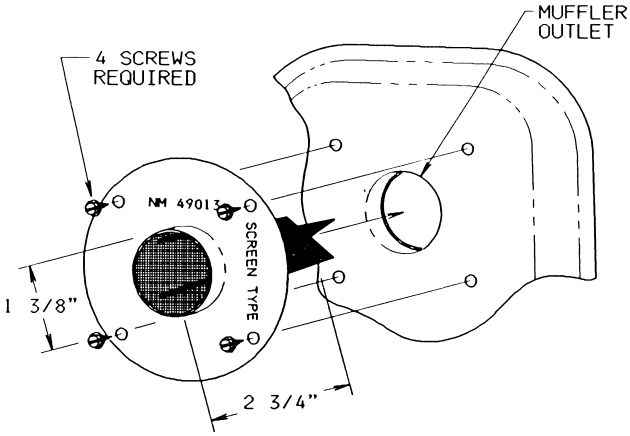

49013

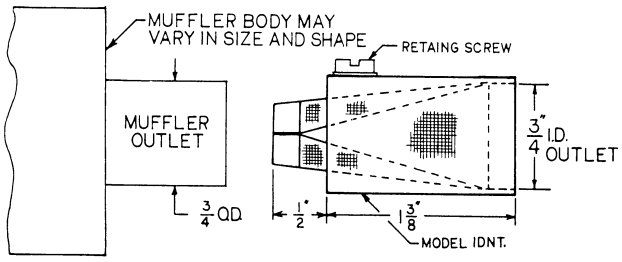

49017

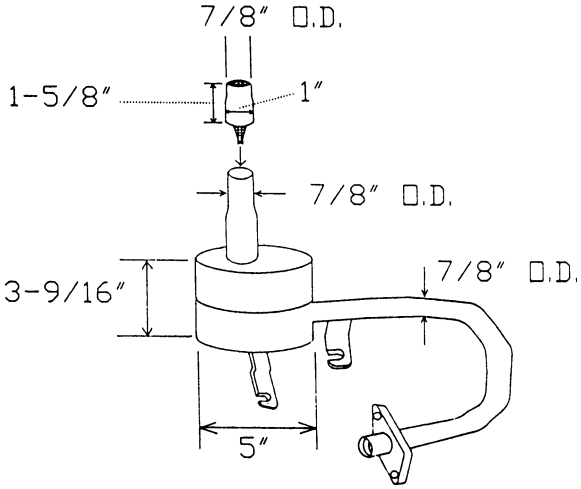

49019

NELSON *(continued)*

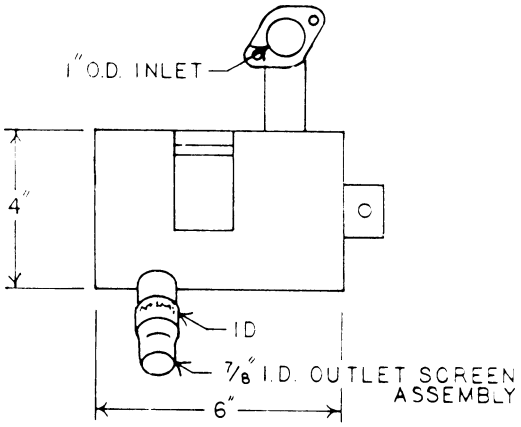

49020

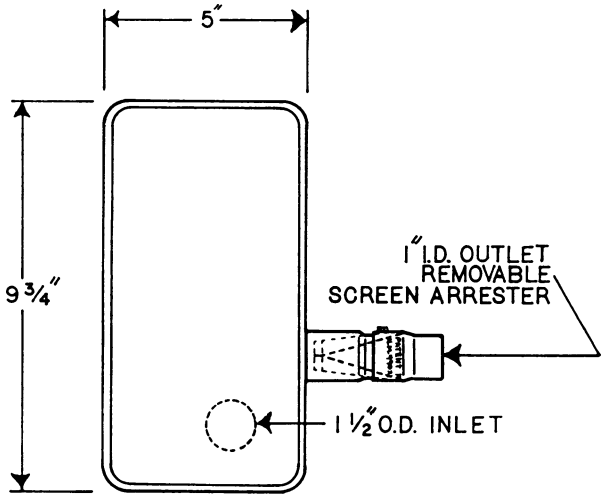

49021

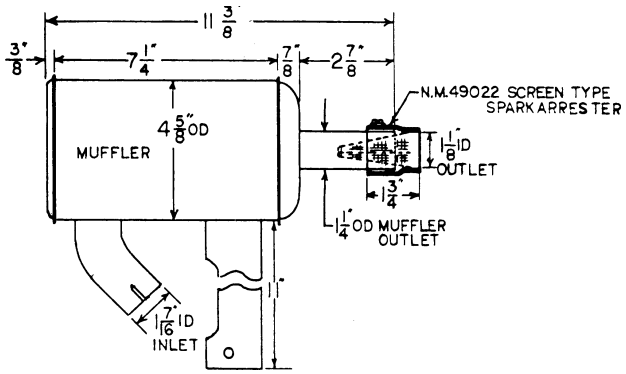

49022

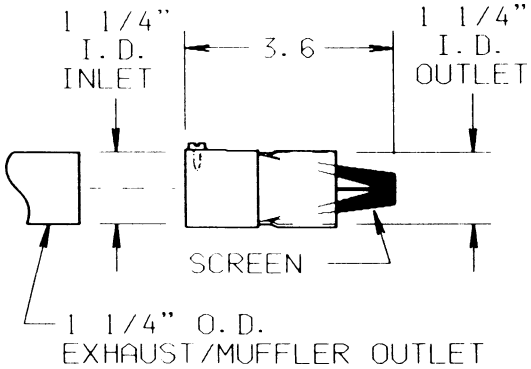

49022G

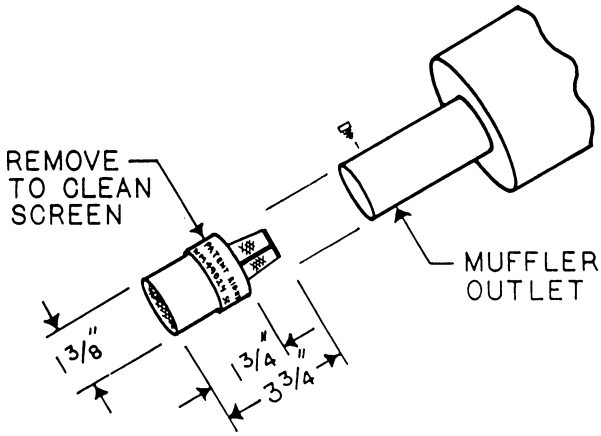

49024

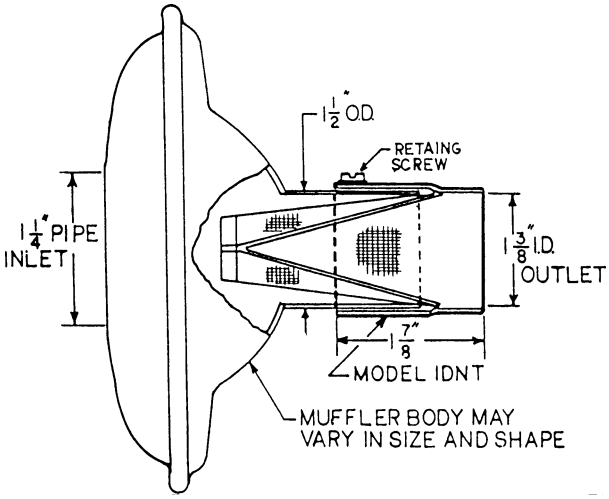

49025

NELSON *(continued)*

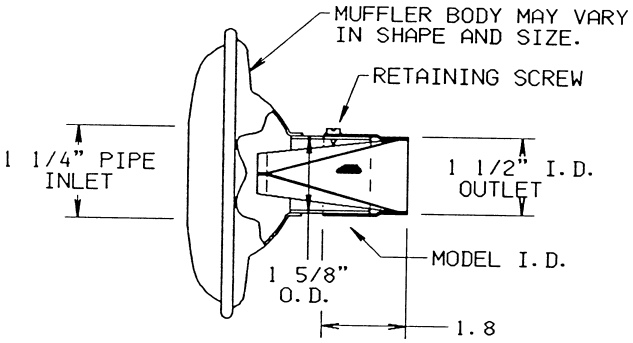

49026

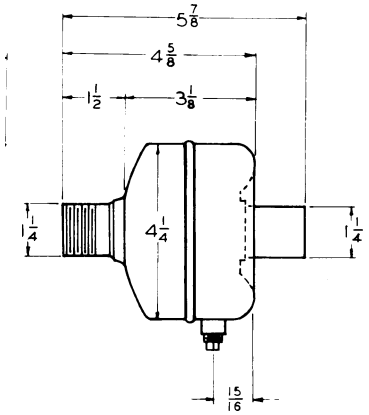

49110
T-9458

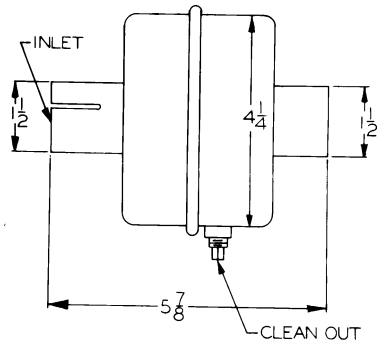

49114
T-14123

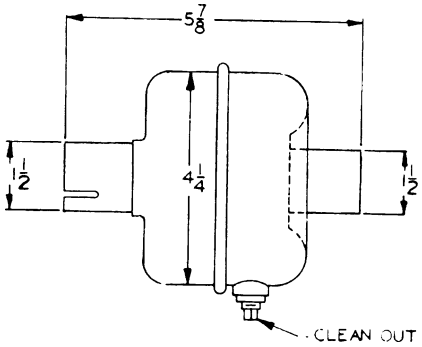

49115
49115C

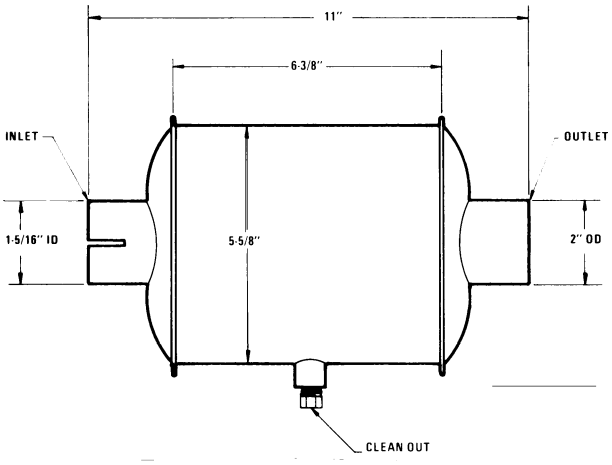

49119

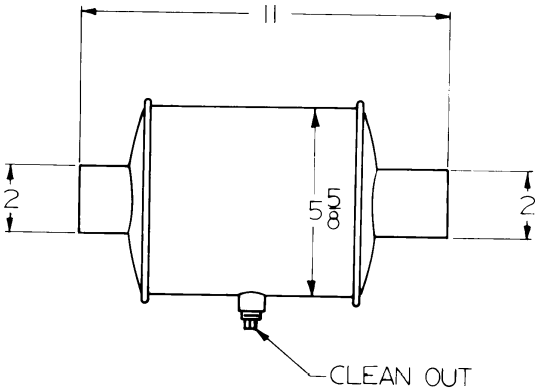

49120

Nelson 49120F—see 49120
Inlet may vary 2" I.D. to 2-1/4" I.D.
Outlet may vary 2" O.D. to 2-1/4" I.D.

NELSON *(continued)*

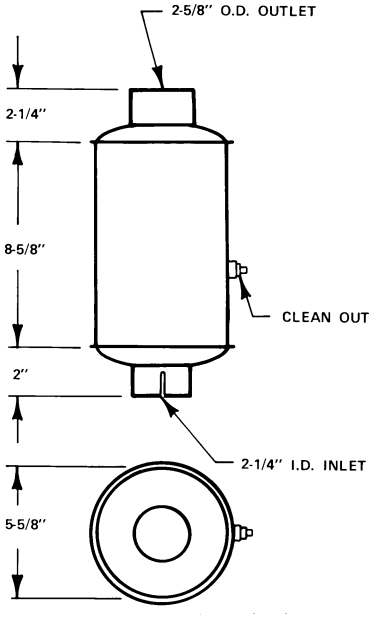

49124

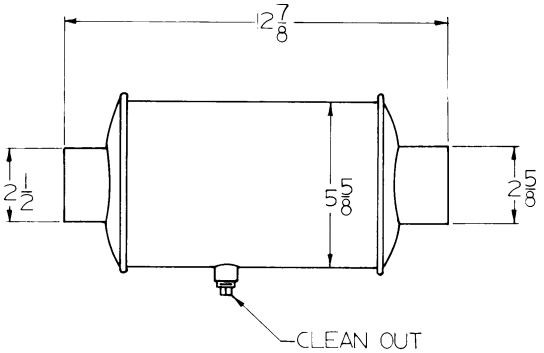

49125

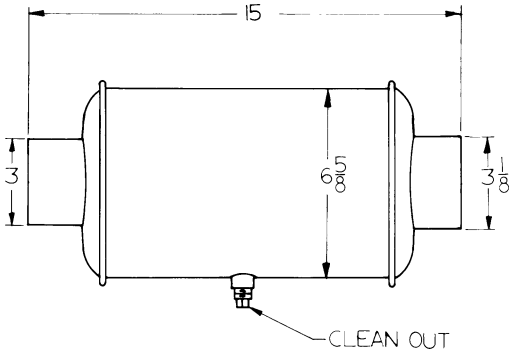

49130

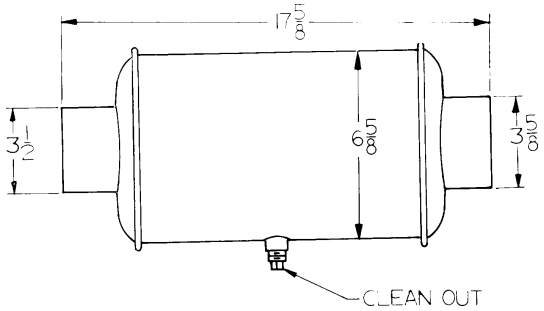

49135

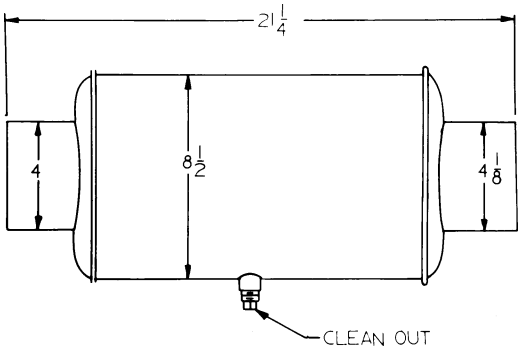

49140

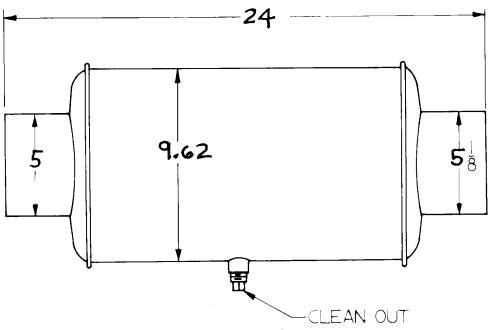

49150

NELSON *(continued)*

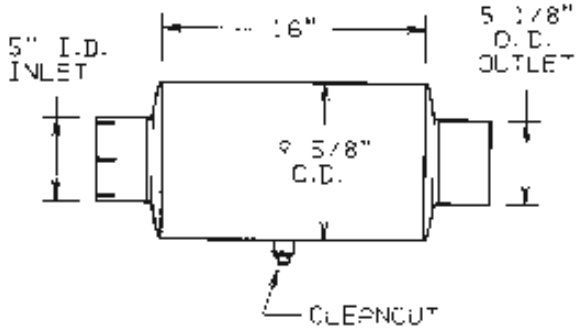

49150U

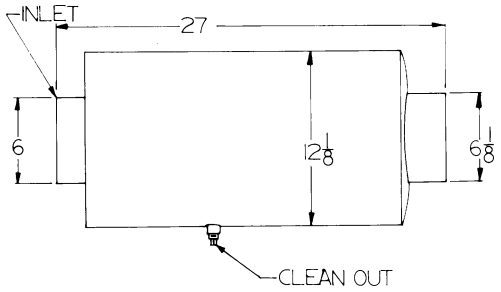

49160

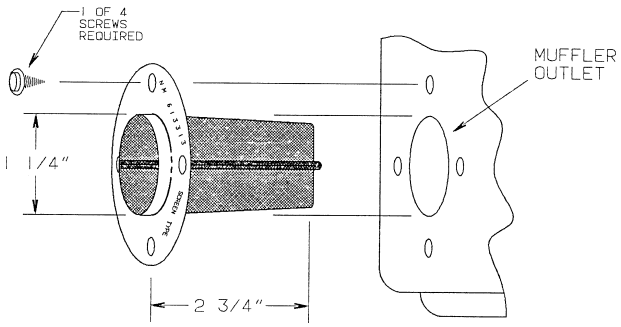

613313

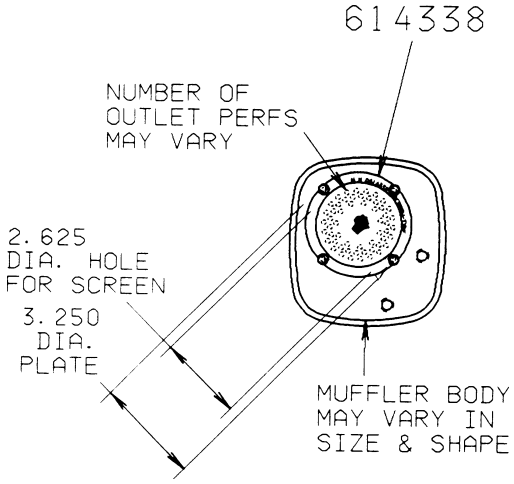

614338

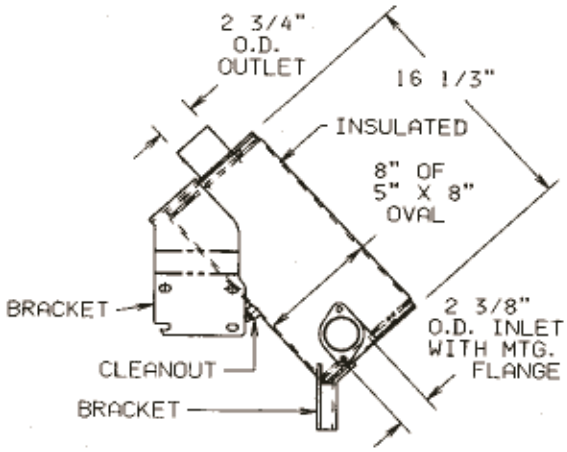

NM28533

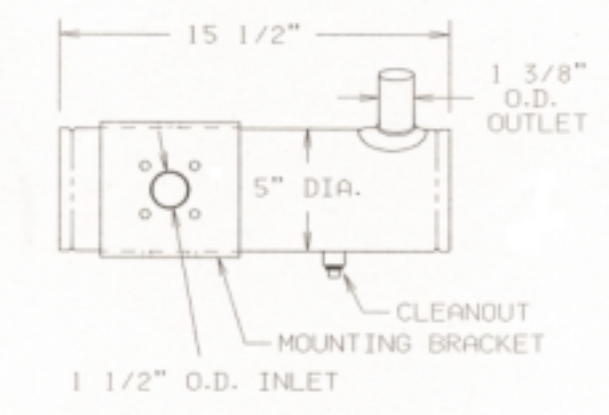

NM28878