A Publication of the
National Wildfire Coordinating Group

Sponsored by
United States
Department of Agriculture

United States
Department of the Interior

National Association of
State Foresters

SPARK ARRESTER GUIDE

General Purpose and Locomotive (GP/Loco) Volume 1

Prepared by:
NWCG Fire Equipment Working Team

PMS 430-1 **JUNE 2002**
NFES 1363

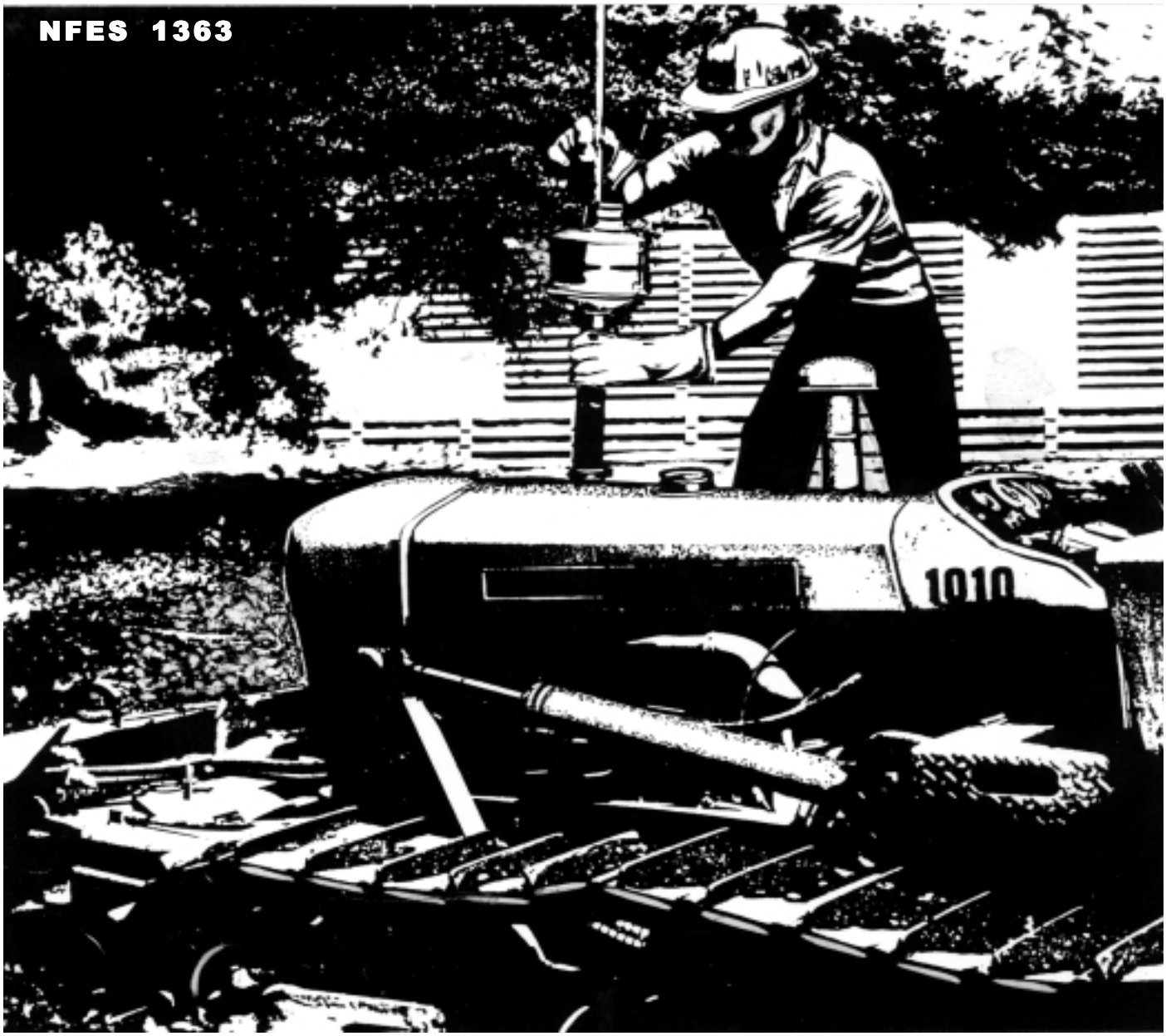

Additional copies of this publication may be ordered
by mail or FAX by sending a purchase order or requisition to:

NATIONAL INTERAGENCY FIRE CENTER
ATTN: Great Basin Cache Supply Office
3833 S. Development Ave.
Boise, ID 83705-5354

FAX: 208-387-5573

ORDER NFES #1363

You will be billed within 30 days of shipping.
When you receive your order,
discard the May 2000 Spark Arrester Guide

WE WANT YOUR COMMENTS

We would like to know what you think of the Spark Arrester Guide.

Does it meet your needs?

What do you like best?

What needs to be improved?

How can these improvements be incorporated?

Your Name _____

Agency _____

Address _____

Telephone No. _____

PLEASE FOLD, STAPLE, STAMP AND MAIL

FOREST SERVICE—USDA
Technology & Development Center
444 East Bonita Avenue
San Dimas, CA 91773-3198

Attn: Spark Arrester Project Leader

SPARK ARRESTER GUIDE

General Purpose and Locomotive (GP/Loco) Volume 1

Prepared by:
NWCG Fire Equipment Working Team

The National Wildfire Coordinating Group (NWCG) had developed this information for the guidance of cooperating Federal, State, and local agencies, and is not responsible for the interpretation of this information by anyone except its member agencies. The use of trade, firm, or corporation names in this publication is for the information and convenience of the reader and does not constitute an endorsement by the NWCG of any product or service to the exclusion of others that may be suitable.

TABLE OF CONTENTS *General Purpose and Locomotive*

Foreword iv

General Instructions for Use of the Spark Arrester Guide (SAG) vi

Updates to the SAG vi

Reprint Information vi

Basic Definitions and Test Standards vii

General Purpose Spark Arrester Inspection Procedures ix

Manufacturers Trademarks 1

Spark Arrester Brand Name/ Manufacturer/Adress 2

2002 Qualified and Rated List—General Purpose Spark Arresters 9

Engine Exhaust Flow Charts 57

GENERAL PURPOSE AND GENERAL PURPOSE SCREEN TYPE SPARK ARESTERS

Acerbis 63
Advanced Car Specialties 63
AirMaze 64
An Krizman 65
Answer Products 65
Answer, J&R 65
A.P. Parts 66
BBR Motorsports 66
Berkeley 67
Big Gun 67
Bombardier 67
Bombardier-Krizman 67
Briggs & Stratton 68
Burgess-Manning 70
Cal Tube 71
Caterpillar 71
CEDCO 71
Clark 72
Cone 72
Coop 73
Cycle Gear 74
Davis 74
DiscoJet 74
DMC 75
Domestic 75
Donaldson 75
Echo 81
EES 81
Farr 82
FMF 83
FMF Racing 84
Forester 85
Fuji 85
Generac 87
Gill 89
Gilson 93
Gorman-Rupp 93
Hale 93
Hapco 94
Harley-Davidson 99
Hodaka 100
Hodaka-Krizman 100
Honda 100
Honda-Krizman 112
Honda-Nelson 121
Hooker 121
Horstman-Krizman 122
Husqvarna 122
Hutchins Freflo 123
IHC 123
J&R Krizman 123
J.G. Minter & Sons 125
John Deere 125
Kawasaki 125

Kawasaki-Krizman 130
Keen Perceptions 134
Kerker-Krizman 134
Kittell 134
Kohler 136
Krizman 138
KTM 138
Kubota 139
Magnum-Krizman 141
Magnum Racing 141
Maremont 141
Maxim 142
McCulloch 142
Murphy 143
Nelson 143
Nelson-Burgess 213
O&R 214
Onan 214
Performance Specialities 217
PKM 217
Polaris 218
Powell 222
Pro-Circuit 222
Pro-Circuit 223
Reliable 223
Riker 224
Rupp 225
Skyway 226
Skyway-Cobra 226
Soundmaster 227
Sparester 227
Sparky 228
Stemco 229
Strader 229
Summit Industries 229
Supertrapp 230
Suzuki 231
Suzuki-Krizman 234
Suzuki-Sparester 237
Taylor 238
Teck 240
Tecumseh 241
Tillery 242
Toro 242
Torque 243
USDA FS 244
Wacker 244
Wajax Pacific 245
Walker 245
Washington 246
White Brothers 246
Wildfire Pacific 247
Wintec 247
Xducer (see Supertrapp) 247
Yamaha 248
Yamaha-Krizman 253
Yamaha-Skyway 255
Yellow Jacket 255
Yoshimura 256
Yuba 256

LOCOMOTIVE-TYPE SPARK ARRESTERS

Standards for Locomotive-Type Spark Arresters 259

Locomotive-Type Spark Arrester Inspection Procedures 259

Inspection 260

Identification Key 260

Internal or Manifold-Type 260

Locomotive Spark Arresters Internal Spark Arresters—Body Types 261

Locomotive Spark Arresters—Leg Configurations 262

2002 Qualified List—Locomotive 263

2002 Locomotive Type Spark Arrester Manufacturer List 269

Helpful Hints ..... IBC

FOREWORD

In 1986 the National Wildfire Coordinating Group (NWCG) authorized the Fire Equipment Working Team (FEWT) to establish a subcommittee to improve and update the Spark Arrester Guide (SAG). The subcommittee reduced the size of the previous SAG and redesigned it to improve its effectiveness and expand its applicability to more wildland fire agencies and geographic regions. The SAG is published for the guidance of cooperating Federal, State, and local agencies. Federal and State laws and administrative requirements prescribe when and where spark arresters are required.

Appropriate Standards referenced in this SAG establish the minimum performance and maintenance requirements of spark arresters for internal combustion engines to be operated on or near grass, timber, brush, or other wildland fuels. During periods of very high or extreme fire danger, spark arresters meeting these Standards will not give complete protection against exhaust spark fires. Additional measures, including shutdown of operations, may be required during such periods.

The U.S. Department of Agriculture maintains a spark arrester test facility at the Forest Service, San Dimas Technology and Development Center, 444 East Bonita Avenue, San Dimas, CA 91773. The camera-ready copy for the Spark Arrester Guide was produced at the SDTDC for the NWCG by the following personnel:

Ralph Gonzales—Mechanical Engineer
Karla J. Rodriguez—Project Assistant
Janie Ybarra—Visual Information Specialist

NOTES:

GENERAL INSTRUCTIONS FOR USE OF THE SPARK ARRESTER GUIDE (SAG)

The ***General Purpose and Locomotive (GP&L) SAG*** is a compilation of information, lists, and illustrations of qualified GP&L spark arrester systems and engines—including their identifying markings, design, and assembly.

The intent of the SAG is to provide field inspectors with adequate information to determine if an engine and exhaust system combination have been tested and qualified by the San Dimas Technology and Development Center (SDTDC) as meeting the Standard for spark arresting exhaust systems.

The SAG is printed as two publications. This SAG covers ***General Purpose and Locomotive (GP&L)*** arresters, and the other SAG covers ***Multiposition Small Engine (MSE)*** arresters.

In each publication, there is a section for each type of arrester with illustrations of spark arresters listed in alphabetical order by the manufacturer's name, and lists of qualified and rated spark arresters of that type. Inspectors can use these sections to verify qualification status. Specific instructions for use of each section precedes the section.

Use of the SAG is also illustrated in the video "Spark Arresters and the Prevention of Wildland Fires" and may be used as a supplemental instruction tool. The video contains five separate modules titled, "Introduction, Multiposition Small Engine, General Purpose, Off Highway, and Railroad".

The two SAG publications and the video may be ordered, by purchase order or requisition, from:

National Interagency Fire Center (NIFC)
Attn: Great Basin Cache, Supply Office
3833 S. Development Avenue
Boise, ID 83705

FAX: 208-387-5573

You will be billed within 30 days of shipping. Order numbers are:

NFES 2363—Multiposition Small Engine Spark Arrester Guide (MSE) Volume 2.

NFES 1363—General Purpose and Locomotive Spark Arrester Guide (GP/LOCO) Volume 1.

NFES 2237—Spark Arresters and the Prevention of Wildland Fires, (VHS).

When you receive your order, discard the old SAG's.

UPDATES TO THE SAG

Testing of newly submitted spark arresters is an ongoing process at SDTDC. The Center will be responsible for notifying SAG users of newly qualified and rated spark arresters. SDTDC will send the information to appropriate Regional and State offices for their distribution. Users should contact these sources for updated information. SAG Updates are usually mailed in July & December.

For quick reference, updates should be inserted in the publication for the appropriate type arrester. These new qualified arresters will be included with illustrations when the Guides are reprinted. *(See section that follows.)*

REPRINT INFORMATION

SDTDC will determine when adequate information has been compiled to require a reprinting of each publication. The Center will notify the Regional and State offices when a reprinting is available. It is anticipated that a reprinting may be required on odd numbered years for the ***Multiposition Small Engine (MSE) Guide*** and on even numbered years for the ***General Purpose and Locomotive (GP&L) Guide.***

SDTDC will include the following criteria in their reprint decision:

1. Determination of usable life of the SAG.

2. Volume and complexity of questions received from field users. Major users will be contacted periodically for feedback.

3. Number of SAG updates which have been issued.

4. Inventory at NIFC. Reprinting will be done to meet supply and demand requirements.

BASIC DEFINITIONS AND TEST STANDARDS

Exhaust Particles—All internal combustion engines produce exhaust particles which are predominately carbon with contaminates. These particles originate from deposits formed on the internal surfaces of the engine or exhaust system and, depending on their exact origin, may be expelled at temperatures in excess of 3,000° F. Depending on the nature of the contaminates, these particles are capable of glowing or sometimes flaming combustion. When expelled through the exhaust system into the atmosphere, the combustion process may continue oreven be accelerated during flight. Such particles, if larger than 0.023-inch in diameter and at temperatures of 1,200° F are capable of igniting cellulose materials upon contact.

A Spark Arrester is a device which traps or pulverizes exhaust carbon particles to a size below 0.023-inch in diameter, as they are expelled from an exhaust system. Trap type spark arresters must have a method for removal of accumulated carbon particles. Most spark arresters generally perform in the high 90 percent spark arresting effectiveness range.

General Purpose Spark Arresters are tested against USDA Forest Service Standard 5100-1c or the latest revision of Society of Automotive Engineers (SAE) Recommended Practice SAE J350. Either of these documents establish the minimum performance and maintenance requirements of single-position application general purpose spark arresters. Spark arresting effectiveness shall be at least 80 percent for all flow rates on the cold test which correlates to 90 percent on a hot engine.

Screen-Type Spark Arresters as defined by USDA Forest Service Standard 5100-1c fall into a special category. They are intended for use on small engine applications. All exhaust products must pass through the screen, which has openings of 0.023-inch or less. The effective exhaust area of the screen *(total area of all screen openings)* shall not be less than 200 percent of the engine exhaust port area at its smallest cross-section. Screen material shall be heat and corrosion resistant, and shall provide at least 100 hours of service life. These are originally qualified for all the positions described in the "Application Postions" section.

"Add-On" spark arresters are added onto an existing muffler exhaust system. They are typically used on off-highway-vehicles. Add-on spark arresters must have a method for removal of accumulated carbon particles. Such as a cleanout plug, snap ring, removable end cap or a removable end cleanout. A removable end cleanout is usually secured to the muffler by a retaining band and/or several screws. In order to empty out the accumulated carbon particles with a removable end cleanout, the entire add-on must be removed by loosening the retaining band or screws, to shake out the carbon particles.

The retaining band or screw may not be replaced by welding the removable end cleanout to the existing muffler. This is considered a modification and also does not allow for removal of accumulated carbon particles. Any modification to the spark arrester as compared to the SAG line drawing in this SAG, voids qualification.

Application Positions—Four general positions are considered—vertical, horizontal, inverted, and multiposition. The application is determined by the attitude of the inlet pipe irrespective of the main body position or direction of outlet.

For example:

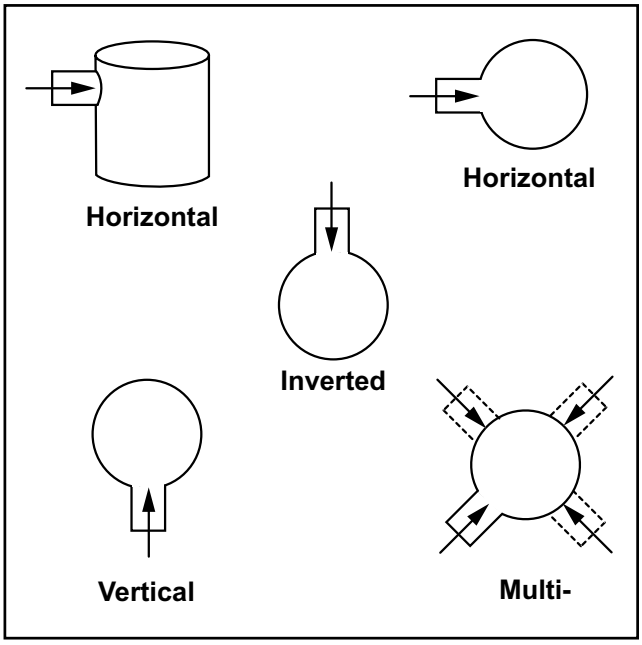

The qualified positions listed include only those tested. In some cases, the manufacturer may claim other positions, but test information at this time neither support or refute such claims. An arrester tilted more than 60 degrees from its qualified operating position may not adequately arrest sparks. Therefore, arresters on mobile equipment—other than screen type arresters— shall not be mounted more than 45 degrees from the qualified position. See column marked "Appl Pos."

Note that USDA Forest Service Standard 5100-1c allows 60 degrees deviation, but at least 15 degrees should be reserved for deviations because of road grade or slope. *(See illustration.)*

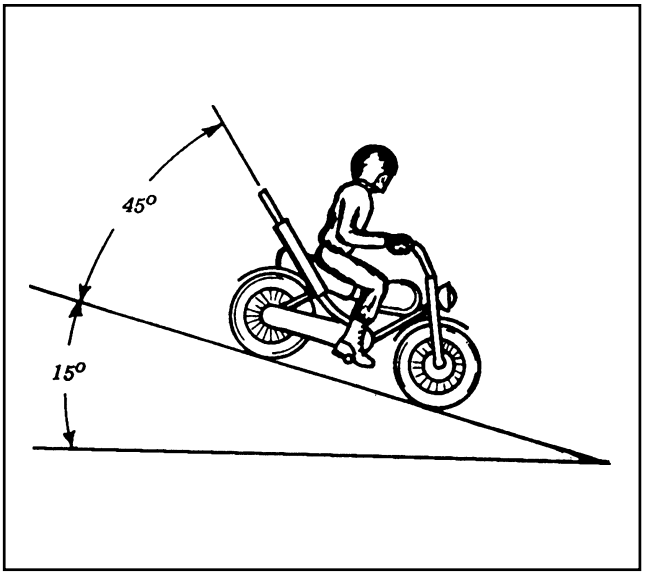

Rated Flow of Arrester is the rate of test gas flow in cubic feet per minute at which the corresponding back pressure is 1 pound per square inch. This is the maximum desirable back pressure for most four-stroke cycle applications. See column marked "Flow." Note: General Purpose Screen Type Spark Arresters are limited to the listed rated flow, 2 or 4 cycle, and horse power.

Some two-cylinder engines may require a higher back pressure. An arrester may be used above its rated flow—provided it maintains a qualifying arresting effectiveness at all levels of use. Arresters that do not have an adequate effectiveness above their rated flow will be designated in the "Remarks" column, and are not qualified to operate in applications where they may be ineffective. With this exception, a qualified arrester properly installed and maintained is acceptable legally regardless of size or rated flow. It is the owner's business if he/she chooses an arrester too large or too small, even though the cost may be excessive or the back pressure too high.

Cleaning—The arrester shall have provision for the easy disposal of the accumulated particles without removal of the clamping or mounting devices from the stack, pipe, or manifold assembly. Screen-type devices shall provide for the easy removal and cleaning or replacement of the screen.

Marking and Labeling—Each arrester shall be permanently marked with the manufacturer's model number designation and a trademark or other identification of manufacturer. Where an inverted installation is possible, the inlet or outlet shall also be marked. In addition to the above markings, screen-type devices must have the words "Screen Type" clearly imprinted in 1/8-inch or larger letters. The model number must match exactly. The words "Qualified" or "Approved" are **not** required, and **do not** indicate that the unit is in fact a qualified arrester.

Discontinued Models will be called out under "Remarks."

Mufflers—Experience and tests have shown that mufflers, in general, are inadequate as spark arresters. Few muffler devices submitted for formal tests meet the requirements of 5100-1c or SAE J350. However, properly maintained baffled mufflers constructed to automotive industry standards, and installed on motor vehicles other than motorcycles are accepted for "on-highway" and "off-road" use in some jurisdictions. Exceptions are for designated areas where a spark arrester is required on cross-country vehicles. Straight-through mufflers, such as glass-pack designs without baffles, are not acceptable. Consult your agency's policy for more specific guidelines.

Turbochargers qualify as effective spark arresters when 100% of the exhaust gases pass through the turbine wheel. The turbine wheel must be turning at all times and there must be no exhaust bypass to the atmosphere. Depending on design, small enclosed system bypasses that reroute some of the exhaust back through the engine may be allowed. The illustration of the exhaust-driven turbocharger shows the air intake and the exhaust path through the turbine wheel. The action of the rotating turbine wheel causes carbon particles to remain within the confines of the turbo-drive section until they are reduced to a harmless size by attrition.

Superchargers, which are strictly mechanically driven, do not qualify.

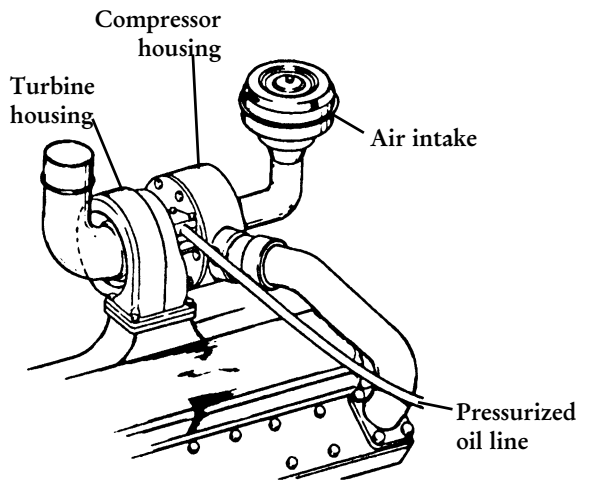

Exhaust-driven Turbocharger

Exhaust System—The exhaust system consists of the manifold *(on multicylinder engines),* muffler or spark arrester or both, an exhaust pipe between the engine cylinder exhaust outlet port, and the end of the exhaust pipe which is open to the atmosphere.

Exhaust Manifold—A chamber into which the exhaust from each of the engine cylinders is collected. The exhaust is then directed out of the manifold to a muffler or spark arrester or both.

Most large locomotive engines have the spark arrester designed into the exhaust manifold. Small, single-cylinder engines do not have manifolds.

Modification—**Any** modification or damage to **any** part of the system as it was presented to SDTDC for testing **voids** the qualifications of the spark arrester on the equipment. Modifications usually consist of removal of or damage to parts, change in exhaust outlets, replacing the fiberglass packing with steel wool, improper mounting, and bypasses.

Follow your agency policies when a modified/ unqualified spark arrester system is encountered.

GENERAL PURPOSE SPARK ARRESTER INSPECTION PROCEDURES

Standard 5100-1c requires that each arrester shall be permanently marked with the model number and the manufacturer's name or trademark. The model number must match exactly. The identification must be stamped in the metal body or on an attached metal plate. The words "Qualified" or "Approved" are **not** required, and do **not** indicate that the unit is in fact a qualified arrester.

1. If identification of the manufacturer's name and model number is found, then refer to the "Qualified and Rated" list.

2. Check the "Qualified and Rated" list to establish if the arrester is qualified.

3. If not on the "Qualified and Rated" list, be sure to check any SAG update information you have received since the time of the printing of your present SAG. The absence of an arrester from these lists indicates that the arrester has not been qualified.

4. After the arrester has been identified, turn to the Drawing Section and check the spark arrester illustration for an **exact** match on the configuration, dimensions and cleanout devices. The drawing must match the spark arrester you are inspecting.

5. Suggested tools for inspections:
   a. Handtools to open cleanout, screwdriver and pliers.
   b. Flashlight.
   c. 1/8-inch wire rod or stick to probe inside the arrester to determine if stationary fan or vanes are in place.
   d. Tape measure.
   e. 0.024-inch wire gauge to determine screen size.

6. Inspect to ensure that:
   a. The spark arrester is correct for the position of application.
   b. The exhaust system between the engine and the spark arrester is in good order.
   c. The arrester is properly maintained and cleaned out when necessary.

d. There are no modifications to the exhaust system.

7. More detailed instructions are available in the NWCG video, “Spark Arresters and the Prevention of Wildland Fires".

8. Follow your agency policies when an unqualified spark arrester system is encountered.

TRADEMARKS USED FOR MANUFACTURER IDENTIFICATION

Manufacturer	Trademark
AP PARTS	X
BRIGGS & STRATTON	
FUJI (ROBIN)	
GENERAC	G G
HER CHEE	HC
MAREMONT	+
McCULLOCH	
NELSON	NM
SOUNDMASTER/WALKER	
TECUMSEH (formerly TAYLOR)	

SPARK ARRESTER BRAND NAME/MANUFACTURER/ADDRESS

ACERBIS PLASTICA, USA
9402 Wheatlands Ct., Suite A
Santee, CA 92071

ADVANCED CAR SPECIALTIES (ACS)
114 Railside Road
Toronto, Ontario, Canada

AIR-MAZE
Air-Maze Division, Rockwell Standard Corp.
25000 Miles Road
Cleveland, OH 44120

AL BAKERS XR'S ONLY
6944 Santa Fe Ave.
Hesperia, CA 92345

AMERICAN HONDA MOTOR
1919 Torrance Blvd.
Torrance, CA 90501-2746

AMERICAN SUZUKI MOTOR CORP.
P.O. Box 1100
Brea, CA 92822-1100

AP PARTS
AP Parts Company
1801 Spielbusch Ave.
Toledo, OH 43694

ARROW SPECIAL PARTS
Via Citernese 128/130
06016 San Giustino, Italy

BBR MOTORSPORTS, INC.
19632 70th Ave. South, Bay 3
Kent, WA 98032

BERKELEY
Sta-Rite Industries
293 Wright Street
Delavan, WI 53115

BIG GUN EXHAUST SYSTEMS, INC.
1275 N.W. 70th St.
Claremont, CA 91711

BOMBARDIER-KRIZMAN
Bombardier Limited
Valcourt, Quebec
Canada J0E 2L0

BRIGGS & STRATTON
Briggs & Stratton Corp.
P. O. Box 702
Milwaukee, WI 53201

BURGESS-MANNING
Burgess-Manning, Inc., Silencing Division
227 Thorn Ave.,
Orchard Park, NY 14127

CAL TUBE
California Tube Products, Inc.
7040 Lankersheim Blvd.,
N. Hollywood, CA 91605

CATERPILLAR
Caterpillar Tractor Co.
Peoria, IL 61611

CEDCO
Hale Fire Pump Co.
700 Spring Mill Ave.
Conshohocken, PA 19428

CHIYODA-KINZOKU CO., LTD.
Kawasaki Motor Corp.
9950 Jeronimo Road
Irvine, CA 92618-2084

CLARK
Clark Equipment Co. of Canada Ltd.
Talbot St., St. Thomas, Ontario,
Canada N5P 1H2

CONE
DbA Silencing, Ltd.
33 East 7th Ave.
Vancouver 10, BC, Canada

SPARK ARRESTER BRAND NAME/MANUFACTURER/ADDRESS

COOP
Coop Engineering Inc.
12924 Lakeland Rd.,
Santa Fe Springs, CA 90670

CYCLE GEAR, INC.
303 43rd Streeet
Richmond, CA 94805

DAVIS ENGINEERING CO.
(c/o Lanco Engine, Inc.)
12915 Weber Way, P.O. Box 136,
Hawthorne, CA 90252

DG PERFORMANCE SPECIALTIES, INC.
1230 La Loma Circle
Anaheim, CA 92806

DONALDSON
Donaldson Co., Inc.
P.O. Box 1299, 1400 West 94th Street
Minneapolis, MN 55440-1299

ECHO
Echo Incorporated
400 Oakwood Road
Lake Zurich, IL 60047-1564

ENGINEERING EXHAUST SYSTEM (EES)
126 W. Robin Lane
Brookfield, WI 53005

FARR, FARR ASPIRATOR
Farr Co.
P.O. Box 92187
Airport Station
Los Angeles, CA 90009

FMF RACING, inc.
18033 S Santa Fe Ave.
Rancho Dominguez, CA 90221

FMF/Tru-Tec
27930 Tyler #402
Canyon Country, CA 91351

GENERAC
Generac Power Systems, Inc.
757 North Newcomb Road
Whitewater, WI 53190

GENERAC
Generac Corp.,
P.O. Box 8
Waukesha, WI 53187

GILL
Erickson Products Co.,
Koch Road
Corte Madera, CA 9492

GIlSON
Gilson Brothers Co.
P.O. Box 152
Plymouth, WI 53073

GORMAN-RUPP
Gorman-Rupp Co.
P.O. Box 1217
Mansfield, OH 44901

HALE
Hale Fire Pump Co.
700 Spring Mill Ave.,
Conshohocken, PA 19248

HAPCO (HARCO)
Harco Manufacturing Co.
7700 S.W. 69th Avenue
Portland, OR 97233

HARLEY-DAVIDSON-KRIZMAN
Harley-Davidson Co., Inc.
3700 W. Juneau Avenue
Milwaukee, WI 53201

HER CHEE INDUSTRIAL CO.
No. 2 Yi-Kung 2 Rd. Yi-Chu Ind. Area,
Yi-Chu Hsiang, Chia- Yi Hsien
Taiwan, R.O.C.

SPARK ARRESTER BRAND NAME/MANUFACTURER/ADDRESS

HODAKA, HODAKA-KRIZMAN
Pacific Basin Trading Co.
Athena, OR 97813

HONDA, HONDA-KRIZMAN,
HONDA-NELSON
American Honda Motor Co., Inc.
1919 Torrance Blvd.,
Torrance, CA 90501-2746

HOOKER
Hooker Industries, Inc.
1024 West Brooks St.
Ontario, CA 91762

HORSTMAN-KRIZMAN
Horstman Manufacturing Co., Inc.
730 E. Huntington Drive,
Monrovia, CA 91016

HUSQVARNA, HUSQVARNA-KRIZMAN
Cagiva North America
700 W. 190th St.
Gardena, CA 90248

HUTCHINS FREFlO
MCM Manufacturing Co.
601 S. East Street
Anaheim, CA 92805

IHC
J.I. Case
7 S. 600 County Line Rd.,
Hindsdale, IL 60521

J&R KRIZMAN
Magnum Engineering
21215 Road 252
Lindsay, CA 93247

JOHN DEERE
John Deere Industrial Equipment Co.
61 Inverness Drive
E. Englewood, CO 80112

KAWASAKI, KAWASAKI-KRIZMAN
Kawasaki Motor Corps., USA
9950 Jeronimo Road
Irvine, CA 92618-2084

K.C.F.D.
Kern County Fire Dept.
1025 Golden State Hwy.,
Bakersfield, CA 93301

KEEN PERCEPTION, INC.
8582 N.W. 70th St.
Miami, FL 33166

KERKER-KRIZMAN
3910 Seaport Blvd.
West Sacramento, CA 95691

KITTELL
Kittell, E.M. Products, Inc.
11975 Portland Avenue
S. Burnsville, MN 55337

KOHLER
Kohler Co.—Generator Division
N7650 County Road
Sheboygan, WI 53083

KRIZMAN, KRIZMAN-MAICO,
KSI-WIS-KRISMAN
KESCO Krizman Engineering & Sales Co.
23134 Round Valley Rd.,
Lindsay, CA 93247

KTM SPORT MOTORCYCLE USA, INC.
930 Fesler Street
El Cajon, CA 92020-1808

KUBOTA TRACTOR CORP.
3401 Del Amo Blvd.,
Torrance, CA 90509-2992

MAGNUM-KRIZMAN/ Magnum Racing
Magnum Engineering
21215 Road 252
Lindsay, CA 93247

SPARK ARRESTER BRAND NAME/MANUFACTURER/ADDRESS

MAREMONT
Maremont Corp.
250 E. Kehoem
Carol Stream, IL 60188

MAXIM
Riley-Beard, Inc.
Maxim Silencer Divisiæ
P.O. Box 31115
Shreveport, LA 71130

MURPHY MUFFLER
Murphy Muffler Co., Inc.
9508 Rush
S. El Monte, CA 91733

NELSON
Nelson Division
1801 Highway 51/138
P.O. Box 428,
Stroughton, WI 53589

NELSON-BURGESS
Nelson-Burgess Ltd.,
Hinckley Leicestershire,
LE 10 2LN, England

O&R
O&R Engines, Inc.
3340 Emery Street,
Los Angeles, CA 90023

ONAN
Onan Division
1400 73rd North East
Minneapolis, MN 55432

PERFORMANCE INDUSTRIES GROUP
Via Vittorio Emanuele, 25
S.omobono, Bergamo, Italia 24038

PKM
Ralph Electric Plants, Inc.
836 Broadway
Chula Vista, CA 90210

POLARIS
Polaris Industries
301 5th Ave. SW
Roseau, MN 56751

POWELL
Powell Brothers
3180 Carlin Ave.
Lynwood, CA 90262

PRO-CIRCUIT
130 N. Sherman Unit A
Corona, CA 91720

PRO moto billett
1103 North Shamrock St.
Boise, ID 83713

PRO-tec
41376 Pear Street
Murieta, CA 92562

RIKER
Riker Manufacturing
4901 Stickney Ave.
Toledo, OH 43612

RUPP
Rupp Industries, Inc.
P.O. Box 1217
Mansfield, OH 44903

SKYWAY
Skyway Recreational Products
4451 Caterpillar Rd.,
Redding, CA 96001

SKYWAY-COBRA
Cobra Engineering Corp.
4760 E. Bryson St.
Anaheim, CA 92807

SOUNDMASTER
DeKoven Manufacturing Co.
1201 Michigan Blvd.
Racine, WI 53402

SPARK ARRESTER BRAND NAME/MANUFACTURER/ADDRESS

SPARESTER
Hoei Industries, Inc.
9-10, 2-Chrome, Nishikamata Ota-Ku,
Tokyo 144,JAPAN

STEMCO
Stemco Manufacturing Co.
Box 1989
Longview, TX 75601

STRADER
Little Giant Engineering Inc.
6919 Deering Ave.,
Canoga Park, CA 91303

SUMMIT INDUSTRIES- JARDINE
1275 N. Indian Hill Blvd.
Claremont, CA 91711

SUPERTRAPP
Supertrapp Industries,
Dreison International
3910 Seaport Blvd.
West Sacramento, CA 95691

SUZUKI,SUZUKI-KRIZMAN,
SUZUKI-SPARESTER
American Suzuki Motor Corp.
3251 E. Imperial Hwy.,
Brea, CA 92621-6722

TAGA CORP. AND JAPAN DESIGN
24747 Redlands Blvd
Suite F14
San Bernardino, CA 92408

TAYLOR,TECUMSEH
Tecumseh Products Co.
P.O. Box 700, 1604 Michigan Ave.
New Holstein, WI 53061-0700

TECK
Teck Industries Div.,
Central Ohio Products Co.
2733 Johnson Rd.
Columbus, OH 43219

TILLERY
Resources Conservation Equipment Co.
3776 Catalina Str.
Los Alamitos, CA 90720

TORO
The Toro Company
8111 Lyndale Ave.
S. Minneapolis, MN 55420

Torque
Torque Products,
Ocelot Engineering, Inc.
895 W. Mill Street
San Bernardino, CA 92410

USDA
USDA Forest Service
San Dimas Technology & Development Ctr.
444 E Bonita Ave
San Dimas, CA 91773

WACKER
Wacker Corp
3808 West Elm
Milwaukee, WI 53209

WAJAX-PACIFIC
Wajax-Pacific
P.O. Box 88540
Seattle, WA 98188

WALKER
Walker Manufacturing Co.
1201 Michigan Blvd.
Racine, WI 83402

WASHINGTON IRON WORKS
Washington Iron Works
1500 Sixth Avenue
Seattle, WA 98134

WHITE BROTHERS
24845 Corbit Place
Yorba Linda, CA 92887

SPARK ARRESTER BRAND NAME/MANUFACTURER/ADDRESS

WILD FIRE PACIFC, INC.
6250 South 196th
Kent, WA 98032-1167

WINTEC
Fun ‘n Fast, Inc.
18143 Napa Street
Northridge, CA 91324

XDUCER
Supertrapp Industries
Dreison International
3901 Seaport Blvd.
West Sacramento, CA 95691

YAMAHA, YAMAHA-KRIZMAN,
YAMAHA-SKYWAY
Yamaha Motor Co., USA
P.O. Box 6555
6555 Katella Avenue
Cypress, CA 90630-5101

YELLOW JACKET MFG., INC.
706 Cass St.
Griswold, IA 51535

YOSHIMURA RESEARCH AND DEVELOP-
MENT
4555 Carter Court
Chino, CA 91710

YUBA
Ford Motor Co., Tractor Operations
2500 E. Maple Road
Birmingham, MI 48008

2002 QUALIFIED AND RATED LIST—GENERAL PURPOSE SPARK ARRESTER

	MANUFACTURER AND MODEL	APPL POS	FLOW	PAGE	REMARKS
1	Acerbis 035 MFS-2	Horizontal	74	63	Retaining screws loosen easily
2	Acerbis 035 MFS-5	Horizontal	60	63	~
3	Acerbis 035 MFS-6	Horizontal	64	63	~
4	ACS D1-508-183-05	Horizontal	59	63	
5	Air-Maze 10-FA	Vertical	1,270	64	Horizontal test # 387C Flows above 1270 cfm-not acceptable
6	Air-Maze 146-FA	Horizontal	1,335	64	Flow at 0 psi back pressure. Unit not rated at 1 psi.
7	Air-Maze 4-FA	Vertical	625	64	Horizontal test #387C/Not recommended for flow above
8					300 cfm-screen type, subject to plugging.
9	Air-Maze C19035-10	Vertical	640	64	~
10	Air-Maze C19035-10	Horizontal	679	64	~
11	Air-Maze C19035-3	Horizontal	120	64	~
12	Air-Maze C19035-3	Vertical	140	64	~
13	Air-Maze C19035-4	Vertical	118	64	~
14	Air-Maze C19035-4	Horizontal	126	64	~
15	Air-Maze C19035-5	Horizontal	217	64	~
16	Air-Maze C19035-5	Vertical	220	64	~
17	Air-Maze C19035-6	Vertical	238	64	~
18	Air-Maze C19035-6	Horizontal	302	64	~
19	Air-Maze C19035-7	Vertical	333	64	~
20	Air-Maze C19035-8	Horizontal	332	64	~
21	Air-Maze C19035-8	Vertical	333	64	~
22	Air-Maze C19035-9	Vertical	640	64	~
23	Al Baker's XR's Only Competition Exhaust	Multiple	215	n/d	Screen type and disc type, 12 disc minimum
24	AN Krizman KS650-O	Horizontal	99	65	
25	Answer Products AP650M	Horizontal	156	65	Modified AP650 O & M
26	Answer, J&R AP-500-D	Horizontal	91	65	See Husqvarna-Krizman KS-500D
27	Answer, J&R AP-650	Horizontal	186	65	See J&R Krizman KS-650
28	Answer, J&R AP-650-0 (Angle)	Horizontal	71	65	Angled Body
29	Answer, J&R AP-650-4	Horizontal	60	66	Modified KS-650-A
30	Answer, J&R AP-650-A	Horizontal	63	65	See J&R Krizman KS-650A
31	Answer, J&R AP-650-C	Horizontal	63	65	Approved as J&R Krizman
32	Answer, J&R AP-650-C	Horizontal	63	65	Angled body w/insert; band clamp may be replaced with screws
33	Answer, J&R AP-650-C	Horizontal	97	n/d	With insert; Required on all AP-650 C
34	Answer, J&R AP-650-C (Angle)	Horizontal	83	n/d	Angled Body with insert

*n/d: no diagram; image temporarily unavailable

2002 QUALIFIED AND RATED LIST—GENERAL PURPOSE SPARK ARRESTER

	MANUFACTURER AND MODEL	APPL POS	FLOW	PAGE	REMARKS
35	Answer, J&R AP-650-C (Angle)	Horizontal	63	65	
36	Answer, J&R AP-650-D	Horizontal	67	66	Straight muffler, modified AP-650-O
37	Answer, J&R AP-650-D	Horizontal	67	66	AP-650-0 in a polygon shell
38	Answer, J&R AP-650-M	Horizontal	156	66	Straight muffler, modified AP-650-O
39	Answer, J&R AP-650-M (Angle)	Horizontal	131	66	Angled muffler, modified AP-650-O
40	Answer, J&R AP-650-O	Horizontal	74	65	See J&R Krizman KS-650-0
41	Answer, J&R AP-650-O	Horizontal	63	65	See Answer AP-650-C, KS-650C in an oval muffler.
42	Answer, J&R SA-Pro-2	Horizontal	74	65	Same as J&R 650-0 Krizman may have an outlet stinger
43					angled down.
44	AP Parts 83931893	Horizontal	273	66	See Donaldson FCM06-0037
45	AP Parts 83931893	Vertical	296	66	See Donaldson FCM06-0037
46	AP Parts 83931908	Horizontal	427	66	See Donaldson FCM06-5030
47	AP Parts 83931908	Vertical	436	66	See Donaldson FCM06-5030
48	AP Parts 83931910	Horizontal	597	66	See Donaldson FCM07-0068
49	AP Parts 83931910	Vertical	644	66	See Donaldson FCM07-0068
50	AP Parts 83931921	Horizontal	842	66	See Donaldson FCM07-0069
51	AP Parts 83931921	Vertical	881	66	See Donaldson FCM07-0069
52	AP Parts 83931933	Horizontal	1,177	66	See Donaldson FCM08-0024
53	AP Parts 83931933	Vertical	1,200	66	See Donaldson FCM08-0024
54	AP Parts 83933880	Horizontal	1,630	66	See Donaldson FCM09-0091
55	AP Parts 83933880	Vertical	1,670	66	See Donaldson FCM09-0091
56	AP Parts 83933892	Horizontal	2,480	66	See Donaldson FCM10-0016
57	AP Parts 83933892	Vertical	2,660	66	See Donaldson FCM10-0016
58	Arctic Cat HC18321-145	Multiple	28	n/d	Screen Type
59	BBR Motorsports 340-SA	Multiple	226	66	Screen type used on Honda XR 600 or Suzuki DRZ400 or
60					smaller motorcycles.
61	Berkeley F70-01MC	Horizontal	65	67	Primer-arrester/Main body of arrester vertical but not
62					inverted.
63	Berkeley F70-02MC	Horizontal	144	67	Primer-arrester/Main body of arrester vertical but not
64					inverted.
65	Big Gun WB-2001	Multiple	191	67	For 4 stroke 650 cc (41 HP) or smaller engine.
66					See White Brothers #2001.
67	Bombardier 1980	Horizontal	62	67	22 mm resonator
68	Bombardier 1980	Horizontal	66	67	16 mm resonator

*n/d: no diagram; image temporarily unavailable

2002 QUALIFIED AND RATED LIST—GENERAL PURPOSE SPARK ARRESTER

	MANUFACTURER AND MODEL	APPL POS	FLOW	PAGE	REMARKS
69	Bombardier 1980	Horizontal	66	67	28 mm resonator
70	Bombardier 707 600 066	Multiple	186	68	
71	Bombardier CA-952	Horizontal	100	68	30 mm resonator
72	Bombardier CA-952	Horizontal	66	68	26 mm resonator
73	Bombardier CA-952-1	Horizontal	72	68	~
74	Bombardier-Krizman CA-950	Horizontal	186	67	~
75	Bombardier-Krizman CA-953	Horizontal	114	68	30 mm resonator
76	Bombardier-Krizman KS-250	Horizontal	17	68	~
77	Briggs & Stratton 391911	Multiple	25	68	Screen; 4-cycle, 4 hp or smaller
78	Briggs & Stratton 391912	Multiple	25	68	Screen; 4-cycle, 4 hp or smaller
79	Briggs & Stratton 391913	Multiple	50	69	Screen; 4-cycle, 8 hp or smaller
80	Briggs & Stratton 391915	Horizontal	69	69	See Nelson T-14106
81	Briggs & Stratton 392154	Multiple	81	69	Screen; 4-cycle,16 hp or smaller
82	Briggs & Stratton 392154A	Multiple	99	69	Screen; 4-cycle, 16 hp or smaller, replacement for
83					B&S 391254
84	Briggs & Stratton 396800	Multiple	25	69	Screen; 4-cycle,4 hp or smaller/Outlet deflector is not
85					permanently attached. (See 391911 or 391912)
86	Briggs & Stratton 494486	Multiple	29	70	Screen; 4-cycle, 5.5 hp or less
87	Briggs & Stratton 802502	Multiple	41	70	Screen; 4-cycle, 4 hp or smaller
88	Burgess-Manning SAT-4	Horizontal	790	70	~
89	Burgess-Manning SAT-4	Vertical	795	70	~
90	Burgess-Manning SDMC-4	Horizontal	965	70	~
91	Burgess-Manning SDMC-4	Vertical	1,069	70	~
92	Burgess-Manning SDMC-LP-4	Horizontal	1,070	n/d	~
93	Burgess-Manning SDMC-LP-4	Vertical	1,332	n/d	~
94	Cal Tube 12853	Multiple	74	71	Screen; 4-cycle 14.1hp or smaller
95	Caterpillar 3B5498	Vertical	380	71	Replaced 2F62229
96	Caterpillar 3B7942	Horizontal	597	n/d	See Donaldson FCM07-0068
97	Caterpillar 3B7942	Vertical	640	n/d	See Donaldson FCM07-0068
98	Caterpillar 3B7964	Vertical	680	71	~
99	Caterpillar 8N7074-1	Horizontal	498	71	See Donaldson FMM 12-0303
100	CEDCO Primer-Arrester No. 1	Horizontal	65	71	Primer-arrester. Main body of arrester vertical but
101					not inverted.
102	CEDCO Primer-Arrester No. 2	Horizontal	144	71	Primer-arrester. Main body of arrester vertical but not inverted.

*n/d: no diagram; image temporarily unavailable

2002 QUALIFIED AND RATED LIST—GENERAL PURPOSE SPARK ARRESTER

	MANUFACTURER AND MODEL	APPL POS	FLOW	PAGE	REMARKS
103	Clark 6547049	Horizontal	180	72	~
104	Clark 6551409	Vertical	205	72	~
105	Clark 6552340	Vertical	209	72	~
106	Clark CAC-2000	Horizontal	1,584	72	~
107	Cone 10-D	Vertical	295	72	~
108	Cone 1100	Vertical	310	72	Pulverizer type spark arrester
109	Cone 12-D	Vertical	432	72	~
110	Cone 1500	Vertical	350	n/d	~
111	Cone 390	Vertical	275	n/d	~
112	Cone 8-D	Vertical	182	72	~
113	Coop 400A	Horizontal	53	73	~
114	Coop 500A	Horizontal	78	n/d	~
115	Coop 500A-for LT 125	Horizontal	90	73	~
116	Coop 500B	Horizontal	103	73	~
117	Cycle Gear #1	Multiple	225	74	Screen; 4-cycle, 35 HP
118	Davis D-L260	Horizontal	140	74	~
119	Discojet; See SUPERTRAPP	~	~		See SUPERTRAPP
120	DMC2-K	Multiple	187	75	~
121	Domestic 17510-87232	Inverted	32	75	~
122	Donaldson 142-8811	Vertical Inlet	177.2	79	~
123	Donaldson 142-8845	Vertical Inlet	177	79	see also 142-8811
124	Donaldson 172-3507	Horizontal	215.3	79	~
125	Donaldson 181590A1	Vertical	699	79	~
126	Donaldson 191-2614	Vertical	177	80	~
127	Donaldson 192-2614	Vertical	177	80	~
128	Donaldson 197297A1	Vertical	532	80	~
129	Donaldson 252996A1	Body Horiz./	1,110.5	n/d	Inlet modified for horizontal mounting.
130		Outlet Vertical			~
131	Donaldson 254334A1	Horizontal	557	n/d	~
132	Donaldson 280811A1	Horizontal	394.7	80	~
133	Donaldson 299455A3	Vertical	292.9	n/d	~
134	Donaldson 373393A1	Horizontal	282	80	~
135	Donaldson 403438A1	Horizontal	853	80	~
136	Donaldson A184241	Vertical	259	75	~

*n/d: no diagram; image temporarily unavailable

2002 QUALIFIED AND RATED LIST—GENERAL PURPOSE SPARK ARRESTER

	MANUFACTURER AND MODEL	APPL POS	FLOW	PAGE	REMARKS
137	Donaldson FCM04-5123	Horizontal	131	76	~
138	Donaldson FCM04-5123	Vertical	146	76	~
139	Donaldson FCM04-5214	Horizontal	131	76	~
140	Donaldson FCM04-5214	Vertical	146	76	See Donaldson FCM04-5123
141	Donaldson FCM04-5220	Horizontal	131	76	See Donaldson FCM04-5123
142	Donaldson FCM04-5220	Vertical	146	76	See Donaldson FCM04-5123
143	Donaldson FCM06-0037	Horizontal	273	76	~
144	Donaldson FCM06-0037	Vertical	296	76	~
145	Donaldson FCM06-0038	Vertical	120	76	~
146	Donaldson FCM06-0038	Horizontal	126	76	~
147	Donaldson FCM06-5030	Horizontal	427	76	~
148	Donaldson FCM06-5030	Vertical	436	76	~
149	Donaldson FCM07-0068	Horizontal	597	76	~
150	Donaldson FCM07-0068	Vertical	644	76	~
151	Donaldson FCM07-0069	Horizontal	842	76	~
152	Donaldson FCM07-0069	Vertical	881	76	Flow amended from 1000 to 881 cfm 3/67
153	Donaldson FCM07-0118	Horizontal	597	77	~
154	Donaldson FCM07-0118	Vertical	644	77	Modified FCM07-0068
155	Donaldson FCM07-0122	Horizontal	597	n/d	Modified FCM07-0068
156	Donaldson FCM07-0122	Vertical	644	n/d	Modified FCM07-0068
157	Donaldson FCM07-0126	Horizontal	597	n/d	Model class FCM07-0068
158	Donaldson FCM07-0126	Vertical	644	n/d	Model class FCM07-0068
159	Donaldson FCM07-0139	Horizontal	597	n/d	Model class FCM07-0068
160	Donaldson FCM07-0139	Vertical	644	n/d	Model class FCM07-0068
161	Donaldson FCM07-0249-1	Vertical	638	n/d	Modified FCM07-0068
162	Donaldson FCM07-0304	Horizontal	731	76	~
163	Donaldson FCM07-0304	Vertical	821	76	~
164	Donaldson FCM07-0305	Vertical	1023	76	~
165	Donaldson FCM08-0024	Horizontal	1,177	77	~
166	Donaldson FCM08-0024	Vertical	1,200	77	~
167	Donaldson FCM09-0091	Horizontal	1,630	77	~
168	Donaldson FCM09-0091	Vertical	1,670	77	~
169	Donaldson FCM09-1009	Horizontal	1,630	n/d	See Donaldson FCM09-0091
170	Donaldson FCM09-1009	Vertical	1,670	n/d	See Donaldson FCM09-0091

*n/d: no diagram; image temporarily unavailable

2002 QUALIFIED AND RATED LIST—GENERAL PURPOSE SPARK ARRESTER

	MANUFACTURER AND MODEL	APPL POS	FLOW	PAGE	REMARKS
171	Donaldson FCM10-0016	Horizontal	2,480	77	~
172	Donaldson FCM10-0016	Vertical	2,660	77	~
173	Donaldson FMM03-2515	Vertical	27	77	~
174	Donaldson FMM05-0073	Vertical	66	77	~
175	Donaldson FMM050132	Vertical	146	77	~
176	Donaldson FMM06-0175	Vertical	207	77	~
177	Donaldson FMM065106	Vertical	213	78	~
178	Donaldson FMM09-0510	Horizontal	510	78	~
179	Donaldson FMM09-0638	Vertical	221	78	~
180	Donaldson FMM090843	Vertical	1423	78	~
181	Donaldson FMM12-0303	Horizontal	498	78	See Caterpillar 8N7074-1
182	Donaldson M050235	Horizontal	227.8	n/d	~
183	Donaldson M050238	Vertical	192	n/d	~
184	Donaldson M050242	Vertical	192	78	~
185	Donaldson M050244	Horizontal	227.8	n/d	~
186	Donaldson M050249	Horizontal	190	n/d	~
187	Donaldson M-07-0285	Vertical	512	79	~
188	Donaldson M070378	Vertical	292.9	79	~
189	Donaldson M090955	Horizontal	212.2	n/d	~
190	Donaldson SAU01-5068	Horizontal	126	76	See Donaldson FCM06-0038
191	Donaldson SAU01-5068	Vertical	120	76	See Donaldson FCM06-0038
192	Donaldson SAU02-0170	Horizontal	273	76	See Donaldson FCM06-0037
193	Donaldson SAU02-0170	Vertical	296	76	See Donaldson FCM06-0037
194	Donaldson SAU02-5113	Horizontal	427	76	See Donaldson FCM06-5030
195	Donaldson SAU02-5113	Vertical	436	76	See Donaldson FCM06-5030
196	Donaldson SAU03-0196	Horizontal	597	n/d	See Donaldson FCM07-0068
197	Donaldson SAU03-0196	Vertical	644	n/d	See Donaldson FCM07-0068
198	Donaldson SAU03-5126	Horizontal	842	76	See Donaldson FCM07-0069
199	Donaldson SAU03-5126	Vertical	881	76	See Donaldson FCM07-0069
200	Donaldson SAU04-0369	Horizontal	1,177	77	See Donaldson FCM08-0024
201	Donaldson SAU04-0369	Vertical	1,200	77	See Donaldson FCM08-0024
202	Donaldson SAU05-0366	Horizontal	1,630	77	See Donaldson FCM09-0091
203	Donaldson SAU05-0366	Vertical	1,670	77	See Donaldson FCM09-0091
204	Donaldson SAU06-0467	Horizontal	2,480	77	See Donaldson FCM10-0016

*n/d: no diagram; image temporarily unavailable

2002 QUALIFIED AND RATED LIST—GENERAL PURPOSE SPARK ARRESTER

	MANUFACTURER AND MODEL	APPL POS	FLOW	PAGE	REMARKS
205	Donaldson SAU06-0467	Vertical	2,660	77	See Donaldson FCM10-0016
206	Eagle Carriage & Machine	Vertical	97	n/d	
207	Echo 11620	Multiple	42	81	Screen; 2-cycle, 4.1 hp or smaller
208	EES 0053371	Multiple	24	81	Screen, 2-cycle, 2 hp
209	EES 16009	Multiple	110	81	Screen; 4-cycle, 25 hp or smaller
210	EES 56378	Multiple	24	n/d	
211	EES 89011-9	Multiple	20	81	Screen; 4-cycle, 3 hp or smaller
212	EES 92675	Horizontal	41	81	Screen type, 4-cycle, 35 hp or smaller
213	EES 92675A	Horizontal	41	81	Screen type, 4-cycle, 35 hp or smaller
214	Farr 20B	Vertical	435	n/d	Not qualified above 435 cfm
215	Farr 30B	Vertical	605	n/d	~
216	Farr 40B	Vertical	1,060	n/d	~
217	Farr 50B	Vertical	1,730	n/d	~
218	Farr Aspirator B16647-1	Vertical	625	82	~
219	Farr Aspirator B17345	Vertical	560	82	~
220	Farr Aspirator B18854	Vertical	615	82	~
221	Farr Aspirator C15626	Vertical	221	n/d	~
222	Farr Aspirator C16085	Vertical	221	82	~
223	Farr Aspirator C22001	Vertical	270	82	~
224	FMF/Tru-Tec TDS-1	Horizontal	123	83	~
225	FMF/Tru-Tec TDS-2	Horizontal	123	83	~
226	FMF ISDE Model 1000	Horizontal	186	83	~
227	FMF Racing S2000	Multiple	177.5	84	~
228	FMF Racing TC4-C400	Horizontal	95	84	~
229	FMF Racing TDS-3	Horizontal	123	84	~
230	FMF S3000	Multiple	299	83	Used on Yamaha YZ400F, Suzuki DR400Z, Honda XR650,
231					Honda XR600, Honda XR400
232	Forester 12 x 330	Vertical	1,350	85	4 inch inlet
233	Fuji DY 41	Multiple	63	85	Screen; 4-cycle, 8.5 hp or smaller
234	Fuji EH 17	Multiple	29	n/d	Screen, 4 Cycle, 6 HP
235	Fuji EH 25	Horizontal	41	n/d	Screen; 4-cycle, 8.5 hp or smaller
236	Fuji EH 25	Multiple	41	n/d	Screen, 4 Cycle, 8.5 HP
237	Fuji EH 34	Horizontal	51	85	Screen, 4-cycle, 11.0 hp or smaller
238	Fuji EH 43	Multiple	1,057	86	Screen; 4-cycle, 13 hp or smaller

*n/d: no diagram; image temporarily unavailable

2002 QUALIFIED AND RATED LIST—GENERAL PURPOSE SPARK ARRESTER

	MANUFACTURER AND MODEL	APPL POS	FLOW	PAGE	REMARKS
239	Fuji EY 20	Multiple	30	85	Screen; 4-cycle, 5 hp or smaller
240	Fuji EY 20	Horizontal	29	85	Screen; 4-cycle, 6.0 hp or smaller
241	Fuji EY 20-STD	Multiple	31	85	Screen; 4-cycle, 5 hp or smaller
242	Fuji EY 20V	Multiple	27	86	Screen; 4-cycle, 3.5 hp or smaller
243	Fuji EY 28	Multiple	41	n/d	Screen; 4-cycle, 5.5 hp or smaller
244	Fuji EY 35	Horizontal	58	86	Screen; 4-cycle, 10 hp or smaller
245	Fuji EY 40W	Horizontal	58	86	Screen; 4-cycle, 10 hp or smaller
246	Fuji RGO 051	Multiple	12	86	Screen; 4-cycle, 1.2 hp or smaller
247	Fuji RGO 120	Horizontal	22	86	Screen; 4-cycle, 3.3 hp or smaller
248	Generac 30699	Inverted	47	87	See Nelson T-11068C
249	Generac 31145	Inverted	24	87	See Nelson T-11159
250	Generac 33232	Horizontal	43	87	See Nelson T-11606
251	Generac 37924	Horizontal	50	87	NMC T-13304 approved as NMC T-9458
252	Generac 37936	Inverted	21	87	See Nelson T-12760R
253	Generac 38560	Inverted	33	87	See Nelson T-13265
254	Generac 39081	Inverted	18	87	See Nelson T-13572
255	Generac 39247	Horizontal	50	87	NMC T-13304 approved as NMC T-9458
256	Generac 43951	Inverted	68	87	See Nelson T-14315
257	Generac 43952	Horizontal	74	87	See Nelson T-14316
258	Generac 43953	Inverted	25	87	See Nelson T-14321
259	Generac 72082	Multiple	22	87	Screen; 4-cycle, 3 hp or smaller
260	Generac 72083	Multiple	32	87	Screen; 4-cycle, 5 hp or smaller
261	Generac 72084	Multiple	48	n/d	Screen; 4-cycle, 8 hp or smaller
262	Generac 72279	Multiple	48	88	Screen; 4-cycle, 8 hp or smaller
263	Generac 72281	Multiple	22	87	Screen; 4-cycle, 3 hp or smaller
264	Generac 75788	Multiple	22	88	Screen; 4-cycle, 3 hp or smaller
265	Generac 83083	Multiple	30	88	Screen; 4-cycle, 6 hp or smaller
266	Generac 83083	Multiple	54	88	Screen type; 4-cycle, 13 hp or smaller
267	Generac 89680	Multiple	36	88	Screen type; 4-cycle, 7.8 hp or smaller
268	Generac A7433	Multiple	63	87	~
269	Generac C4289	Multiple	62	87	~
270	Generac C4423	Multiple	62	87	~
271	Generac C5602	Horizontal	30	n/d	~
272	Generac C6580	Multiple	33	n/d	~

*n/d: no diagram; image temporarily unavailable

2002 QUALIFIED AND RATED LIST—GENERAL PURPOSE SPARK ARRESTER

	MANUFACTURER AND MODEL	APPL POS	FLOW	PAGE	REMARKS
273	Generac OD5133	Multiple	166	n/d	Screen Type, 992 cc, 30 HP
274	Generac Portable Products SA001	Horizontal	12	n/d	~
275	Gill 3C	Vertical	85	89	~
276	Gill 3C (Mod. by USDAFS)	Vertical	103	89	~
277	Gill 3C IP	Horizontal	85	89	~
278	Gill 4C IP	Horizontal	79	89	~
279	Gill 5-C-20A	Inverted	185	89	~
280	Gill 5-C-20A	Vertical &			
281		Horizontal	240	89	~
282	Gill 5-C-20B	Vertical &			
283		Horizontal	257	89	~
284	Gill 5-C-23B	Vertical	255	89	~
285	Gill 5-C-23B	Horizontal	355	89	~
286	Gill 5-C-26B	Vertical	315	90	Discontinued
287	Gill 5-CV-20	Vertical	268	90	~
288	Gill 5-CV-23	Vertical	300	90	~
289	Gill 5-CV-24	Vertical	300	90	~
290	Gill 6-C-2030	Vertical &			
291		Horizontal	527	90	12 inch inlet
292	Gill 6-C-24	Horizontal	601	90	12 inch inlet
293	Gill 6-C-24	Vertical	615	90	12 inch inlet
294	Gill 6-C-24	Inverted	680	90	12 inch inlet
295	Gill 6-C-24	Vertical	540	90	Discontinued, 9 inch inlet
296	Gill 6-C-26	Horizontal	628	n/d	~
297	Gill 6-C-26	Vertical	655	n/d	~
298	Gill 6-C-30	Vertical &			
299		Horizontal	625	90	~
300	Gill 6-C-30	Inverted	665	90	~
301	Gill 6-C-34	Vertical	660	90	~
302	Gill 6-C-34	Horizontal	685	90	~
303	Gill 6-C-34	Inverted	808	90	~
304	Gill 6-CV-24	Vertical	720	90	~
305	Gill 6-CV-26	Vertical	650	91	~
306	Gill 6-CV-30	Vertical	600	91	~

*n/d: no diagram; image temporarily unavailable

2002 QUALIFIED AND RATED LIST—GENERAL PURPOSE SPARK ARRESTER

	MANUFACTURER AND MODEL	APPL POS	FLOW	PAGE	REMARKS
307	Gill 6-CV-34	Vertical	625	91	~
308	Gill 8-C-40	Hor & Inv	1,170	n/d	~
309	Gill 8-CV-34	Vertical	800	n/d	~
310	Gill 8-CV-40	Vertical	1,285	91	~
311	Gill 8-CV-50	Vertical	1,405	91	~
312	Gill 8-CV-60	Vertical	1,466	91	~
313	Gill GSF-200	Vertical	355	91	~
314	Gill GSF-300	Vertical	675	91	Discontinued
315	Gill GSF-400	Vertical	1,050	92	Discontinued
316	Gill GSH-200	Horizontal	340	92	~
317	Gill GSH-300	Horizontal	730	92	Discontinued
318	Gill GSO-300	Vertical	1,030	92	Discontinued
319	Gilson 36742	Multiple	81	93	Screen; 4-cycle, 16 hp or smaller
320	Gorman-Rupp 46211-018	Multiple	84	93	Screen; 2-cycle, 10 hp or smaller
321	Hale 108-0230-02	Multiple	80	93	Screen; 4-cycle, 16 hp or smaller
322	Hale 108-0230-06	Multiple	80	93	Screen; 4-cycle, 16 hp or smaller. Is a modified 108-0230-02
323					for use on one cylinder of an engine. Elbow added/inlet.
324	Hapco 12AC12LP	Vertical	7,000	94	May be used on a round or oval stack
325	Hapco 1AA	Vertical	96	94	~
326	Hapco 1AA S.A.M. 13-18	Vertical	94	94	~
327	Hapco 1AAXH	Horizontal	76	94	~
328	Hapco 2AA	Vertical	167	94	~
329	Hapco 2AA S.A.M. 24-112	Vertical	110	94	~
330	Hapco 2AAH	Horizontal	112	94	~
331	Hapco 3AA	Vertical	205	95	~
332	Hapco 3AA S.A.M. 36-2	Vertical	174	95	~
333	Hapco 3AAXH	Horizontal	258	95	Not qualified above 258 cfm
334	Hapco 3H	Horizontal	200	95	Discontinued
335	Hapco 4AA	Vertical	395	95	Discontinued
336	Hapco 4AA (Step Design Top)	Vertical	485	n/d	~
337	Hapco 4AA S.A.M. 48-3	Vertical	317	95	~
338	Hapco 4AAH	Horizontal	417	95	~
339	Hapco 5AA	Vertical	705	95	~
340	Hapco 5AA (Altered 5A)	Vertical	680	95	~

*n/d: no diagram; image temporarily unavailable

2002 QUALIFIED AND RATED LIST—GENERAL PURPOSE SPARK ARRESTER

	MANUFACTURER AND MODEL	APPL POS	FLOW	PAGE	REMARKS
341	Hapco 5AA (Step Design Top)	Vertical	660	n/d	~
342	Hapco 5AA S.A.M. 59-3	Vertical	466	96	~
343	Hapco 5AAH	Horizontal	620	96	~
344	Hapco 5AAH S.A.M. 59-3	Horizontal	527	96	~
345	Hapco 6A	Vertical	900	96	Discontinued
346	Hapco 6AA	Vertical	717	96	4 inch outlet
347	Hapco 6AA S.A.M. 69-4	Vertical	678	96	~
348	Hapco 6AAH	Horizontal	848	96	~
349	Hapco 6AB	Vertical	1,168	96	5 inch outlet
350	Hapco 6H	Vertical	900	96	Discontinued
351	Hapco 7A	Vertical	1,410	97	Discontinued
352	Hapco 7AB	Vertical	1,555	97	~
353	Hapco 7AC	Vertical	1,210	97	Modified 7AB
354	Hapco 7AC1	Vertical	1,801	97	~
355	Hapco 7AC1	Horizontal	1,944	97	~
357	Hapco 7H	Vertical	1,410	97	Discontinued
358	Hapco 8AB	Vertical	2,930	97	~
359	Hapco SAM-712	Vertical	1,555	97	7AB w/muffler section added
360	Hapco SASR-36H-3AAXH	Horizontal	172	97	3AAXH w/muffler section added
361	Hapco SASR-48	Vertical	200	98	~
362	Hapco SASR-48H	Horizontal	252	98	~
363	Hapco SASR-559	Vertical	880	98	~
364	Hapco SASR-59	Vertical	393	98	Inlet may be offset 2 inches
365	Hapco SASR-69H	Horizontal	454	98	6AAH w/muffler section added
366	Harley-Davidson 65234-75P	Horizontal	24	99	~
367	Harley-Davidson 65241-75P	Horizontal	24	99	~
368	Harley-Davidson 65463-75P	Horizontal	24	99	~
369	Harley-Davidson-Krizman H.D.-1	Horizontal	24	n/d	~
370	Harley-Davidson-Krizman H.D.-2	Horizontal	24	n/d	~
371	Harley-Davidson-Krizman H.D.-3	Horizontal	24	n/d	~
372	Harley-Davidson-Krizman KS-400	Horizontal	49	n/d	~
373	Hodaka Ace 90D	Horizontal	26	100	Not qualified above 26 cfm
374	Hodaka-Krizman ACE 100	Horizontal	24	100	~
375	Honda 1063	Horizontal	12	101	~

*n/d: no diagram; image temporarily unavailable

2002 QUALIFIED AND RATED LIST—GENERAL PURPOSE SPARK ARRESTER

	MANUFACTURER AND MODEL	APPL POS	FLOW	PAGE	REMARKS
376	Honda 113	Horizontal	6	100	~
377	Honda 175	Horizontal	18	101	~
378	Honda 200	Horizontal	14	101	~
379	Honda 405	Horizontal	21	101	~
380	Honda 405A	Horizontal	21	101	~
381	Honda 408	Horizontal	32	101	~
382	Honda 503	Horizontal	47	101	~
383	Honda 72	Horizontal	25	100	Not qualified above 25 cfm
384	Honda E-300	Horizontal	10	102	Not qualified above 10 cfm
385	Honda E-400	Horizontal	25	102	~
386	Honda E-600	Horizontal	14	102	~
387	Honda HM GCF A1	Horizontal	25	102	Screen, 4-cycle, 4.72 hp
388	Honda HM HN1 A1	Multiple	117	102	
389	Honda HM KCE A1	Horizontal	74	103	Screen type, 4-cycle, 22.4 hp or smaller
390	Honda HM KCY A1	Multiple	116	103	~
391	Honda HM KCY A2	Multiple	125	103	Screen, 4-cycle, 34.6 hp
392	Honda HM-KV6-A1	Horizontal	51	103	Modified Honda Krizman 508
393	Honda HM-MY6-A1	Horizontal	55	n/d	~
394	Honda Nelson 23066	Horizontal	64	n/d	~
395	Honda Nelson 23930	Horizontal	65	n/d	Modified Honda Nelson 23066
396	Honda Nelson 24075	Horizontal	52	n/d	~
397	Honda S-350	Multiple	22	103	Screen; 4-cycle, 3.5 hp or smaller
398	Honda S-351	Multiple	22	104	Screen; 4-cycle, 3.2 hp or smaller
399	Honda S-352	Multiple	62	104	Screen; 4-cycle, 10 hp or smaller
400	Honda S-353	Multiple	65	104	Screen; 4-cycle, 11 hp or smaller
401	Honda S-354	Multiple	30	104	Screen; 4-cycle, 5.5 hp or smaller
402	Honda S-355	Multiple	9	105	Screen; 4-cycle, 1.3 hp or smaller
403	Honda S-356	Multiple	30	105	Screen; 4-cycle, 5 hp or smaller
404	Honda S-356A	Multiple	30	105	Screen; 4-cycle, 5 hp or smaller
405	Honda S-357	Multiple	62	105	Screen; 4-cycle, 11 hp or smaller
406	Honda S-358	Multiple	14	106	Screen; 4-cycle, 2.2 hp or smaller
407	Honda S-358	Multiple	15	106	Screen; 4-cycle, 2.2 hp or smaller
408	Honda S-359	Multiple	25	107	Screen; 4-cycle, 5.5 hp or smaller
409	Honda S-359	Multiple	30	107	Screen; 4-cycle, 10 hp or smaller

*n/d: no diagram; image temporarily unavailable

2002 QUALIFIED AND RATED LIST—GENERAL PURPOSE SPARK ARRESTER

	MANUFACTURER AND MODEL	APPL POS	FLOW	PAGE	REMARKS
410	Honda S-360	Multiple	62	107	Screen; 4-cycle, 12 hp or smaller
411	Honda S-361	Multiple	54	107	Screen; 4-cycle, 14 hp or smaller
412	Honda S-361	Multiple	96	107	Screen; 4-cycle, 18 hp or smaller
413	Honda S-361A	Multiple	54	107	Screen; 4-cycle, 13 hp or smaller
414	Honda S-361A	Multiple	59	107	Screen; 4 cycle, 13 hp (new Muffler)
415	Honda S-362	Multiple	22	107	Screen; 4-cycle, 5 hp or smaller
416	Honda S-362	Multiple	25	107	Screen; 4-cycle, 5.5 hp or smaller
417	Honda S-363	Multiple	22	108	Screen; 4-cycle, 5 hp or smaller
418	Honda S-363	Multiple	25	108	Screen; 4-cycle, 5.5 hp or smaller
419	Honda S-364	Multiple	36	108	Screen; 4-cycle, 8 hp or smaller
420	Honda S-364	Multiple	41	108	Screen; 4-cycle, 9 hp or smaller
421	Honda S-365	Multiple	51	108	Screen; 4-cycle, 11 hp or smaller
422	Honda S-365	Multiple	59	108	Screen; 4-cycle, 13 hp (increased hp)
423	Honda S-365-A	Multiple	59	108	Screen; 4-cycle, 13 hp or smaller
424	Honda S-366	Multiple	51	109	Screen; 4-cycle, 11 hp or smaller
425	Honda S-366-A	Multiple	51	109	Screen; 4-cycle, 11 hp or smaller
426	Honda S-366-A	Multiple	59	109	Screen; 4-cycle, 13 hp or smaller
427	Honda S-366-B	Multiple	110	109	Screen in each exhaust port; 4cly, 22 hp
428	Honda S-367	Multiple	13	110	Screen; 2-cycle, 0.9 hp or smaller
429	Honda S-368	Multiple	62	110	Screen; 4-cycle, 9 hp or smaller
430	Honda S-415	Multiple	30	110	Screen type
431	Honda S-417	Multiple	24	110	Screen, 4-cycle, 4.1 hp
432	Honda S-418	Multiple	15	111	~
433	Honda S-418	Multiple	15	111	~
434	Honda-Krizman 103	Horizontal	18	112	~
435	Honda-Krizman 104	Horizontal	27	112	Not qualified above 27 cfm
436	Honda-Krizman 105	Horizontal	27	112	~
437	Honda-Krizman 106	Horizontal	12	112	~
438	Honda-Krizman 107	Horizontal	27	112	~
439	Honda-Krizman 108	Horizontal	16	112	~
440	Honda-Krizman 109	Horizontal	42	113	~
441	Honda-Krizman 111	Horizontal	27	113	~
442	Honda-Krizman 112	Horizontal	18	113	~
443	Honda-Krizman 115	Horizontal	19	113	~

*n/d: no diagram; image temporarily unavailable

2002 QUALIFIED AND RATED LIST—GENERAL PURPOSE SPARK ARRESTER

	MANUFACTURER AND MODEL	APPL POS	FLOW	PAGE	REMARKS
444	Honda-Krizman 116	Horizontal	15	114	~
445	Honda-Krizman 203	Horizontal	27	114	~
446	Honda-Krizman 204	Horizontal	27	114	~
447	Honda-Krizman 205	Horizontal	27	114	~
448	Honda-Krizman 206	Horizontal	27	114	~
449	Honda-Krizman 207	Horizontal	20	114	~
450	Honda-Krizman 209	Horizontal	27	114	~
451	Honda-Krizman 210	Horizontal	35	115	~
452	Honda-Krizman 300	Horizontal	27	115	~
453	Honda-Krizman 301	Horizontal	22	115	~
454	Honda-Krizman 302	Horizontal	27	n/d	~
455	Honda-Krizman 303	Horizontal	31	115	~
456	Honda-Krizman 304	Horizontal	46	115	~
457	Honda-Krizman 305	Horizontal	33	116	~
458	Honda-Krizman 306	Horizontal	38	116	~
459	Honda-Krizman 400	Horizontal	42	116	~
460	Honda-Krizman 401	Horizontal	42	116	~
461	Honda-Krizman 402	Horizontal	33	116	~
462	Honda-Krizman 404	Horizontal	42	116	~
463	Honda-Krizman 406	Horizontal	48	117	~
464	Honda-Krizman 407	Horizontal	80	117	~
465	Honda-Krizman 409	Horizontal	69	117	~
466	Honda-Krizman 409-A	Horizontal	71	117	Modified 409
467	Honda-Krizman 410	Horizontal	70	117	~
468	Honda-Krizman 411	Horizontal	86	117	~
469	Honda-Krizman 412	Horizontal	87	118	~
470	Honda-Krizman 413	Horixontal	66	118	~
471	Honda-Krizman 500	Horizontal	42	118	With or without heat shield
472	Honda-Krizman 501	Horizontal	78	118	~
473	Honda-Krizman 502	Horizontal	36	118	~
474	Honda-Krizman 504	Horizontal	85	118	~
475	Honda-Krizman 505	Horizontal	46	119	~
476	Honda-Krizman 506	Horizontal	111	119	~
470	Honda-Krizman 507	Horizontal	58	119	~

*n/d: no diagram; image temporarily unavailable

2002 QUALIFIED AND RATED LIST—GENERAL PURPOSE SPARK ARRESTER

	MANUFACTURER AND MODEL	APPL POS	FLOW	PAGE	REMARKS
471	Honda-Krizman 508	Horizontal	97	119	508 in a muffler shell
472	Honda-Krizman 508	Horizontal	97	119	With curved outlet
473	Honda-Krizman 508	Horizontal	102	119	~
474	Honda-Krizman 508	Horizontal	60	119	With diffuser
475	Honda-Krizman 508	Horizontal	153	119	Diffuser fixing screws must be in place
476	Honda-Krizman 508	Horizontal	79	119	508 installed in a new muffler
477	Honda-Krizman 509	Horizontal	53	119	~
478	Honda-Krizman 600	Horizontal	26	119	~
479	Honda-Krizman 601	Horizontal	48	129	~
480	Honda-Krizman 700	Horizontal	52	120	~
481	Honda-Krizman 701	Horizontal	25	120	With diffuser
482	Honda-Krizman 701	Horizontal	281	120	Diffuser fixing screws must be in place
483	Honda-Nelson 26296	Horizontal		121	
484	Hooker 26281	Multiple	230	121	Screen; 2-cycle, 44 hp or smaller
485	Hooker 26282	Multiple	192	121	Screen; 2-cycle, 30 hp or smaller
486	Hooker 26283	Multiple	114	121	Screen; 2-cycle, 15.6 hp or smaller
487	Horstman-Krizman HE	Horizontal	27	122	Types A through E provide various inlet dimensions and shapes.
488	Husqvarna F15-1041	Horizontal	94	122	~
489	Husqvarna-Krizman KS-500D	Horizontal	91	122	~
490	Hutchins Freflo No. 1	Horizontal	135	123	~
491	IHC 1275835C1	Vertical	405	n/d	See Nelson 19853
492	IHC 561217C92	Vertical	485	202	~
493	IHC 563507C91	Vertical	380	205	See Nelson T-14005
494	IHC 677817R91	Vertical	176	195	See Nelson T-10374
495	IHC 70769C1	Vertical	305	200	See Nelson T-12818
496	IHC 829176C91	Inverted	178	n/d	See Nelson T-14009
497	IHC 829640C91	Inverted	213	213	See Nelson T-13994
498	J&R Answer- SEE Answer	~	~		~
499	J&R Krizman KS-350	Horizontal	58	123	~
500	J&R Krizman KS-500-A	Horizontal	104	123	~
501	J&R Krizman KS-500-C	Horizontal	86	123	~
502	J&R Krizman KS-650	Horizontal	186	123	~
503	J&R Krizman KS-650-0	Horizontal	74	123	~
504	J&R Krizman KS-650-A	Horizontal	63	124	~

*n/d: no diagram; image temporarily unavailable

2002 QUALIFIED AND RATED LIST—GENERAL PURPOSE SPARK ARRESTER

	MANUFACTURER AND MODEL	APPL POS	FLOW	PAGE	REMARKS
505	J&R Krizman KS-650-C	Horizontal	63	124	KS-650A in an oval muffler
506	J&R Krizman KS-650-V	Vertical	180	124	~
507	J&R Krizman KS-800	Horizontal	122	124	~
508	J.G. Minter & Sons M2000	Multiple	44	125	~
509	John Deere AH-75693	Horizontal	213	125	~
510	John Deere AH-75694	Horizontal	348	125	~
511	John Deere AH-75695	Horizontal	394	125	~
512	John Deere AH-80388	Vertical	382	125	~
513	John Deere AH-84965	Horizontal	505	125	~
514	John Deere AH-87289	Horizontal	324	125	~
515	John Deere AT-32701	Vertical	148	125	~
516	John Deere AT-33686	Horizontal	148	125	~
517	K.C.F.D. 1	Horizontal	65	n/d	See CEDCO Primer-Arrester No. 1
518	Kawasaki 18077-2110	Multiple	22	125	~
519	Kawasaki 3951	Horizontal	32	126	~
520	Kawasaki 3951	Multiple	20	126	Screen; 4-cycle, 3.2 hp or smaller
521	Kawasaki 3952	Horizontal	32	126	Screen; 4-cycle, 7.5 hp or smaller
522	Kawasaki 3952-A	Multiple	20	126	Screen; 4-cycle, 7.5 hp or smaller
523	Kawasaki 3964	Multiple	46	126	Screen; 4-cycle, 7.5 hp or smaller
524	Kawasaki 3965	Multiple	46	126	~
525	Kawasaki 3966	Multiple	46	126	~
526	Kawasaki DX 200	Horizontal	32	126	~
527	Kawasaki DX 250D	Horizontal	79	126	Angled muffler; arrester horizontal
528	Kawasaki FA 130D	Multiple	20	127	Screen; 4-cycle, 2.6 hp or smaller
529	Kawasaki FA 210D	Multiple	30	127	Screen; 4-cycle, 4.5 hp or smaller
530	Kawasaki FA 76D	Multiple	12	126	Screen; 4-cycle, 1.4 hp or smaller
531	Kawasaki FE 290D	Multiple	43	127	Screen; 4-cycle, 9 hp or smaller
532	Kawasaki FE170D	Multiple	29	n/d	Screen type
533	Kawasaki FG 200D	Multiple	49	127	Screen; 4-cycle, 6.8 hp or smaller
534	Kawasaki FG 300D	Multiple	49	127	Screen; 4-cycle, 6.8 hp or smaller
535	Kawasaki KD 080N2	Horizontal	21	127	~
536	Kawasaki KDX200H	Horizontal	62	128	~
537	Kawasaki KF-150	Multiple	88	128	Screen; 4-cycle, 14 hp or smaller
538	Kawasaki KG-4000	Multiple	51	128	Screen; 4-cycle, 8.2 hp or smaller

*n/d: no diagram; image temporarily unavailable

2002 QUALIFIED AND RATED LIST—GENERAL PURPOSE SPARK ARRESTER

	MANUFACTURER AND MODEL	APPL POS	FLOW	PAGE	REMARKS
539	Kawasaki KG-5000	Multiple	60	128	Screen; 4-cycle, 10 hp or smaller
540	Kawasaki KG-550	Horizontal	22	128	~
541	Kawasaki KHI LF 400	Horizontal	38	129	Removable outlet tube; 2 cleanout plugs
542	Kawasaki KHI LX 650	Horizontal	19	129	~
543	Kawasaki KHI LX 650C	Horizontal	62	129	~
544	Kawasaki KHI-KL250	Horizontal	42	128	~
545	Kawasaki KL250G	10° Horizontal	46	129	~
546	Kawasaki KLX-250D	Horizontal	17	129	~
547	Kawasaki X171	Multiple	12	129	Screen; 4-cycle, 1.7 hp or smaller
548	Kawasaki X171A	Multiple	12	130	Screen; 4-cycle, 1.7 hp or smaller
549	Kawasaki-Krizman DX-200	Horizontal	78	n/d	~
550	Kawasaki-Krizman DX-250	Horizontal	73	130	~
551	Kawasaki-Krizman KD-400	Horizontal	42	131	~
552	Kawasaki-Krizman KG-250	Horizontal	18	131	~
553	Kawasaki-Krizman KG-250A	Horizontal	23	131	~
554	Kawasaki-Krizman KG-250C	Horizontal	91	131	~
555	Kawasaki-Krizman KHI KE-250B	Horizontal	45	131	~
556	Kawasaki-Krizman KHI-KL6	Horizontal	70	n/d	~
557	Kawasaki-Krizman KS-250	Horizontal	27	131	See Suzuki-Krizman KS-250
558	Kawasaki-Krizman KS-350 KHI-DX080A	Horizontal	46	131	~
559	Kawasaki-Krizman KS-350 KHI-DX080C	Horizontal	34	132	~
560	Kawasaki-Krizman KS-350 KHI-DX080C1	Horizontal	23	132	~
561	Kawasaki-Krizman KS-500 KDX 175	Horizontal	49	132	~
562	Kawasaki-Krizman KS-500 KHI KL65	Horizontal	60	132	~
563	Kawasaki-Krizman KS-500 KHI-DX200A	Horizontal	64	132	~
564	Kawasaki-Krizman KS-500 KHI-DX200C	Horizontal	61	132	~
565	Kawasaki-Krizman KS-500 KHI-KSF250	Horizontal	38	132	~
566	Kawasaki-Krizman KS-500 KHI-LF110	Horizontal	27	133	~
567	Kawasaki-Krizman KS-500 KHI-LF220	Horizontal	44	133	~
568	Kawasaki-Krizman KS-500 KHI-LF300C	Horizontal	44	133	~
569	Kawasaki-Krizman KS-500 KHI-LT110A	Horizontal	27	133	~
570	Kawasaki-Krizman KS-500 KHI-LT160	Horizontal	27	133	See KHI LT110A
571	Kawasaki-Krizman KS-500 KHI-LT200A	Horizontal	48	n/d	See DX200A
572	Kawasaki-Krizman KS-500 KHI-LT250A	Horizontal	50	133	~

*n/d: no diagram; image temporarily unavailable

2002 QUALIFIED AND RATED LIST—GENERAL PURPOSE SPARK ARRESTER

	MANUFACTURER AND MODEL	APPL POS	FLOW	PAGE	REMARKS
573	Kawasaki-Krizman KS-500 KHI-XT250	Horizontal	70	133	~
574	Kawasaki-Krizman KS-500 KHI-XT250B2	Horizontal	65	133	~
575	Kawasaki-Krizman YS-80	Horizontal	24	133	~
576	Kawasaki-KrizmanKS-500 KHI-KL600	Horizontal	28	132	~
577	Keen Perceptions Industries AA06-800-00 YXL	Multiple	50	n/d	Uses Double Screen
578	Kerker-Krizman KS-650-K	Horizontal	187	134	~
579	Kittell 1010 HT	Vertical	500	136	~
580	Kittell 3510-SA 1-1/4	Horizontal	60	136	~
581	Kittell S 1-1/2A	Vertical	146	134	~
582	Kittell S 2-1/2A	Vertical	370	134	~
583	Kittell S-2A	Vertical	150	134	~
584	Kittell S-3	Vertical	415	134	~
585	Kittell S-3A	Vertical	468	135	~
586	Kittell S-4	Vertical	935	135	~
587	Kittell S-4A	Vertical	1,008	135	~
588	Kittell S-5	Vertical	1,100	135	~
589	Kittell S-5A	Vertical	1,150	135	Not qualified above 1,150 cfm
590	Kittell S-T-1-1/2	Vertical	136	n/d	~
591	Kittell S-T-2	Vertical	211	135	~
592	Kittell S-T-2-1/2	Vertical	406	135	~
593	Kittell S-T-3	Vertical	497	135	~
594	Kittell S-T-3-1/2	Vertical	616	135	~
595	Kittell S-T-4	Vertical	960	136	~
596	Kittell S-T-5	Vertical	1,312	136	~
597	Kohler 228173	Inverted	27	n/d	See Nelson 20788
598	Kohler 228218	Multiple	30	136	Screen; 4-cycle, 4 hp or smaller
599	Kohler 239724	Horizontal	43	136	~
600	Kohler 278189	Horizontal	40	137	Modified Kohler 278223
601	Kohler 278218	Horizontal	40	137	~
602	Kohler 278223	Inverted	40	137	~
603	Kohler 278224	Inverted	44	137	~
604	Kohler 278232	Horizontal	40	137	Modified Kohler 278223
605	Kohler 278402	Horizontal	44	136	Modified Kohler 278224; Body/arrester Horizontal
606	Kohler 278403	Horizontal	44	136	Modified Kohler 278224; Body/arrester Horizontal

*n/d: no diagram; image temporarily unavailable

2002 QUALIFIED AND RATED LIST—GENERAL PURPOSE SPARK ARRESTER

	MANUFACTURER AND MODEL	APPL POS	FLOW	PAGE	REMARKS
607	Kohler 278416	Horizontal	40	136	Modified Kohler 278224; Body/arrester Horizontal
608	Krizman 11-5H.34B	Horizontal	21	138	Not qualified above 21 cfm Models that lack the
609					letter “B” are not qualified
610	Krizman KS-650-A	Horizontal	63	138	See J&R Krizman KS-650A
611	Krizman T-H100 or T-H100M	Horizontal	22	138	~
612	Krizman V-H 11	Horizontal	186	138	~
613	Krizman V-H-1	Horizontal	92	138	~
614	Krizman-Maico KS-500/250.28505.01	Horizontal	~	n/d	~
615	KSI-WIS-Krizman KS-650-K	Horizontal	69	n/d	Modified Krizman KS-650-0
616	KTM K-300	Horizontal	65	138	~
617	KTM K-620	Horizontal	83	138	See KTM K-300
618	Kubota 8501A	Horizontal	83	139	~
619	Kubota 8502C	Multiple	20	139	Screen; 4-cycle, 3.4 hp or smaller
620	Kubota 8503C	Multiple	21	139	Screen; 4-cycle, 5.2 hp or smaller
621	Kubota 8504C	Multiple	32	139	Screen; 4-cycle, 7.4 hp or smaller
622	Kubota 8505B	Multiple	43	139	Screen; 4-cycle, 4.0 hp or smaller
623	Kubota 8906A	Multiple	30	139	Screen; 4-cycle, 7.87 hp or smaller
624	Kubota 8907A	Multiple	59	140	Screen; 4-cycle, 6.08 hp or smaller
625	Kubota 8908A	Multiple	37	140	Screen; 4-cycle, 8.9 hp or smaller
626	Kubota 8909A	Multiple	49	140	Screen; 4-cycle, 6.6 hp or smaller
627	Kubota 8910A	Multiple	41	n/d	Screen; 4-cycle, 1.15 hp or smaller
628	Kubota 9001B	Multiple	13	n/d	Screen; 4-cycle, 8.9 hp or smaller
629	Magnum Krizman KS650-M	Horizontal	90	n/d	~
630	Magnum Racing KS-800M-2	Horizontal	354	n/d	~
631	Magnum-Krizman KS-650-A	Horizontal	60	n/d	See J&R Krizman 650A
632	Maremont 4605	Horizontal	1,630	n/d	~
633	Maremont 4305	Horizontal	63	n/d	~
634	Maremont 4305	Vertical	273	n/d	~
635	Maremont 4306	Horizontal	296	n/d	~
636	Maremont 4306	Vertical	436	n/d	~
637	Maremont 4307	Horizontal	597	n/d	~
638	Maremont 4307	Vertical	644	n/d	~
639	Maremont 4308	Horizontal	842	n/d	~
640	Maremont 4308	Vertical	881	n/d	~

*n/d: no diagram; image temporarily unavailable

2002 QUALIFIED AND RATED LIST—GENERAL PURPOSE SPARK ARRESTER

	MANUFACTURER AND MODEL	APPL POS	FLOW	PAGE	REMARKS
641	Maremont 4604	Horizontal	1,177	n/d	~
642	Maremont 4604	Vertical	1,200	n/d	~
643	Maremont 4605	Vertical	1,670	n/d	~
644	Maxim 2 MSA1	Horizontal	218	142	~
645	McCulloch MPP 1500E	Multiple	21	142	Screen; 4-cycle, 2.7 hp or smaller
646	McCulloch MPP 2300E	Multiple	30	142	Screen; 4-cycle, 5.5 hp or smaller
647	McCulloch MPP 3500E	Multiple	42	142	Screen; 4-cycle, 5.5 hp or smaller
648	McCulloch MPP 600E/800E	Multiple	12	142	Screen; 4-cycle, 1.4 hp or smaller
649	Murphy Muffler MM3S 2.5	Multiple	240	143	Screen; 2-cycle, 29.4 hp or smaller
650	Nelson 14110	Vertical	435	143	~
651	Nelson 14113	Vertical	182	143	Body Horizontal
652	Nelson 14217	Horizontal	186	143	~
653	Nelson 14390	Vertical	111	143	~
654	Nelson 14572	Horizontal	167	144	~
655	Nelson 15064A	Vertical	244	144	~
656	Nelson 15514	Inverted	615	144	Two inlets; One outlet
657	Nelson 15567	Inverted	35	144	~
658	Nelson 15730	Horizontal	35	144	Modified T-14321
659	Nelson 15731	Horizontal	42	144	~
660	Nelson 15818	Vertical	112	145	~
661	Nelson 15870	Inverted	99	145	Modified T-14123
662	Nelson 15876	Vertical	348	145	~
663	Nelson 15893	Inverted	42	145	See Onan 155-1520
664	Nelson 15934	Horizontal	95	145	Body Horizontal
665	Nelson 15935	Horizontal	71	145	Two inlets; One outlet. Body Horizontal
666	Nelson 15982	Horizontal	63	146	Body Horizontal
667	Nelson 16001	Vertical	750	146	~
668	Nelson 16006	Horizontal	112	146	~
669	Nelson 16011	Horizontal	50	146	~
670	Nelson 16025	Vertical	196	146	Body Horizontal
671	Nelson 16068	Horizontal	325	146	~
672	Nelson 16152	Horizontal	148	147	Two inlets; One outlet. Body Horizontal
673	Nelson 16170	Vertical	588	147	Two inlets; One outlet. Body Horizontal
674	Nelson 16297	Horizontal	71	147	Body Horizontal

*n/d: no diagram; image temporarily unavailable

2002 QUALIFIED AND RATED LIST—GENERAL PURPOSE SPARK ARRESTER

	MANUFACTURER AND MODEL	APPL POS	FLOW	PAGE	REMARKS
675	Nelson 16300	Horizontal	81	147	Body Horizontal
676	Nelson 16301	Horizontal	59	147	Body Horizontal
677	Nelson 16302	Horizontal	150	147	~
678	Nelson 16304	Horizontal	62	148	~
679	Nelson 16361	Inverted	43	148	~
680	Nelson 16362	Inverted	46	148	~
681	Nelson 16460	Inverted	61	148	~
682	Nelson 16504	Vertical	640	148	~
683	Nelson 16506A	Vertical	258	148	~
684	Nelson 16507A	Vertical	440	148	~
685	Nelson 16538	Vertical	282	149	~
686	Nelson 16547	Vertical	194	149	Body Horizontal
687	Nelson 16572	Horizontal	108	149	Two inlets; One outlet
688	Nelson 16619	Inverted	105	149	Body Horizontal
689	Nelson 16628	Horizontal	105	149	Two inlets; 36 outlet holes/Body Horizontal
690	Nelson 16667	Inverted	35	149	Body Horizontal
691	Nelson 16752	Vertical	75	150	Body Horizontal
692	Nelson 16825	Horizontal	79	150	Body Horizontal
693	Nelson 16828	Horizontal	87	150	Body Horizontal
694	Nelson 16868	Horizontal	206	150	~
695	Nelson 16888	Vertical	140	150	Body Horizontal
696	Nelson 16909	Inverted	243	150	~
697	Nelson 16932	Horizontal	160	151	Body Horizontal
698	Nelson 16956	Horizontal	108	151	Body Horizontal
699	Nelson 16986	Vertical	102	151	2 vertical inlets; 1 outlet/Body Horizontal
700	Nelson 16988	Horizontal	116	151	Body Horizontal
701	Nelson 16989	Horizontal	54	151	Not qualified above 54 cfm
702	Nelson 16990	Vertical	100	151	Body Horizontal
703	Nelson 16990A	Vertical	100	151	Same as 16990 except for outlet rotational angle length.
704					Body Horizontal
705	Nelson 17005	Vertical	558	152	Body Horizontal
706	Nelson 17043	Horizontal	68	152	Body Horizontal
707	Nelson 17088	Horizontal	57	152	Body Horizontal
708	Nelson 17112	Inverted	31	152	Body Horizontal

*n/d: no diagram; image temporarily unavailable

2002 QUALIFIED AND RATED LIST—GENERAL PURPOSE SPARK ARRESTER

	MANUFACTURER AND MODEL	APPL POS	FLOW	PAGE	REMARKS
709	Nelson 17123	Vertical	192	152	Body Horizontal
710	Nelson 17185	Inverted	170	152	Body Horizontal
711	Nelson 17254	Horizontal	386	152	Body Horizontal
712	Nelson 17318	Multiple	81	152	Adapter for Nelson 35347 screen assembly
713	Nelson 17334	Horizontal	122	153	~
714	Nelson 17371	Vertical	131	153	Two inlets; One outlet
715	Nelson 17410	Horizontal	95	153	Body Horizontal. Inlet may be smaller
716	Nelson 17470	Horizontal	65	153	Body Horizontal
717	Nelson 17480	Horizontal	420	153	~
718	Nelson 17533	Horizontal	69	153	~
719	Nelson 17622	Horizontal	89	154	Two inlets; One outlet. Body Horizontal
720	Nelson 17622-C	Horizontal	89	154	Modified Nelson 17622
721	Nelson 17657	Vertical	226	154	~
722	Nelson 17674	Inverted	150	154	Body Horizontal
723	Nelson 17695	Vertical	143	154	Body Horizontal
724	Nelson 17701	Horizontal	1,044	154	Two inlets; One outlet. Body Horizontal
725	Nelson 17746	Vertical	107	154	Body Horizontal
726	Nelson 17747	Horizontal	89	155	Body Horizontal
727	Nelson 17749	Horizontal	97	155	Body Horizontal
728	Nelson 17750	Horizontal	141	155	Body Horizontal
729	Nelson 17765	Vertical	81	155	Body Horizontal
730	Nelson 17898	Horizontal	46	155	~
731	Nelson 17899	Horizontal	754	155	Two inlets, One outlet. Body Horizontal
732	Nelson 17973	Vertical	357	156	~
733	Nelson 17974	Vertical	454	156	~
734	Nelson 17998	Vertical	78	156	Body Horizontal
735	Nelson 18012	Horizontal	94	n/d	See 17410 for drawing & photo/Body Horizontal
736	Nelson 18018	Vertical	455	156	May have side or bottom clean out plug
737	Nelson 18031	Inverted	110	156	Body Horizontal
738	Nelson 18090	Horizontal	700	156	Two inlets; One outlet. Body Horizontal
739	Nelson 18289	Inverted	75	15	Body Horizontal
740	Nelson 18433	Vertical	165	157	~
741	Nelson 18493	Horizontal	94	n/d	See Nelson 17410 for drawing & photo
742	Nelson 18528	Horizontal	74	157	Body Horizontal

*n/d: no diagram; image temporarily unavailable

2002 QUALIFIED AND RATED LIST—GENERAL PURPOSE SPARK ARRESTER

	MANUFACTURER AND MODEL	APPL POS	FLOW	PAGE	REMARKS
743	Nelson 18528A	Horizontal	70	157	Body Horizontal
744	Nelson 18613	Vertical	196	157	Body Horizontal
745	Nelson 18631	Vertical	83	157	Body Horizontal
746	Nelson 18642	Horizontal	576	157	Outlet length may vary. Body Horizontal
747	Nelson 18731	Horizontal	90	157	Two inlets; One outlet. Body Horizontal
748	Nelson 18753	Multiple	81	158	Adapter for Nelson 35347 screen assembly
749	Nelson 18798	Vertical	77	158	~
750	Nelson 18875	Horizontal	77	158	~
751	Nelson 18885	Vertical	50	158	Body Horizontal
752	Nelson 19005	Vertical	213	158	~
753	Nelson 19051	Vertical	225	158	Approved as T-14222
754	Nelson 19052	Vertical	225	158	Approved as T-14222
755	Nelson 19053	Vertical	225	158	Approved as T-14222
756	Nelson 19062	Horizontal	576	158	Approved as T-18642
757	Nelson 19068	Vertical	133	159	~
758	Nelson 19125	Vertical	350	159	~
759	Nelson 19126	Vertical	238	159	~
760	Nelson 19139	Vertical	93	159	Two inlets; One outlet
761	Nelson 19269	Vertical	225	159	Approved as 19053
762	Nelson 19273	Vertical	300	159	Approved as T-14219
763	Nelson 19341	Horizontal	193	160	Body Horizontal
764	Nelson 19382	Vertical	124	160	Body Horizontal
765	Nelson 19383	Vertical	225	160	Approved as 19052, See Nelson T-14222
766	Nelson 19453	Inverted	505	160	~
767	Nelson 19578	Horizontal	198	160	~
768	Nelson 19705	Vertical	213	160	Body Horizontal
769	Nelson 19773	Vertical	243	161	~
770	Nelson 19820	Horizontal	36	161	Also identified as ONAN 155-2048
771	Nelson 19822	Horizontal	38	161	Also identified as ONAN 155-2047
772	Nelson 19825	Horizontal	18	161	Body vertical
773	Nelson 19826	Horizontal	28	161	Body vertical
774	Nelson 19830	Vertical	345	161	Not qualified above 345 cfm
775	Nelson 19853	Vertical	405	162	Also identified as IHC1275825C, Body Horizontal
776	Nelson 19941	Horizontal	94	162	Two inlets; One outlet. Body Horizontal

*n/d: no diagram; image temporarily unavailable

2002 QUALIFIED AND RATED LIST—GENERAL PURPOSE SPARK ARRESTER

	MANUFACTURER AND MODEL	APPL POS	FLOW	PAGE	REMARKS
777	Nelson 19973	Horizontal	45	162	Body Horizontal
778	Nelson 19975	Horizontal	95	162	Two inlets; One outlet
779	Nelson 19976	Horizontal	125	162	Two inlets; One outlet. Body Horizontal
780	Nelson 19994	Vertical	94	162	Two inlets; One outlet
781	Nelson 20069	Horizontal	470	163	Body Horizontal
782	Nelson 20072	Vertical	392	163	Body Horizontal
783	Nelson 20147	Horizontal	78	163	Body Horizontal
784	Nelson 20343	Horizontal	46	163	Same as 17898 except two cleanout plugs
785	Nelson 20490	Horizontal	23	163	Approved as Wacker WM80-58406
786	Nelson 20513	Horizontal	66	163	Also identified as ONAN 155-2098
787	Nelson 20519	Vertical	460	163	Body Horizontal
788	Nelson 20539	Horizontal	207	164	Body Horizontal
789	Nelson 20578	Multiple	30	164	Screen; 4-cycle, 4 hp or smaller
790	Nelson 20578B	Multiple	30	n/d	Screen; 4-cycle, 4 hp or smaller
791	Nelson 20608	Vertical	160	164	Body Horizontal
792	Nelson 20665	Horizontal	36	161	Approved as 19820
793	Nelson 20666	Horizontal	38	161	Approved as 19822
794	Nelson 20687	Horizontal	33	164	Not qualified above 32.5 cfm Body Horiz
795	Nelson 20710	Vertical	252	165	~
796	Nelson 20710	Horizontal	268	165	~
797	Nelson 20788	Inverted	27	165	See Kohler 228173
798	Nelson 20892A	Horizontal	48	161	Same as 19822 except for inlet and outlet rotational angle
799					length/Body Horizontal
800	Nelson 20892B	Horizontal	48	161	Star plug closure cleanout
801	Nelson 20952	Horizontal	111	165	Unit equipped with catalytic converter/Body Horizontal
802	Nelson 20953	Vertical	166	165	Body Horizontal
803	Nelson 20954	Horizontal	257	165	Body Horizontal
804	Nelson 20965	Horizontal	108	166	Distance between inlet and outlet maybe 10.2 or 12 inches.
805					Body Horizontal
806	Nelson 20990	Horizontal	64	166	Body Horizontal
807	Nelson 20990B	Horizontal	64	166	Modified Nelson 20990
808	Nelson 21079	Horizontal	40	n/d	Modified Kohler 278223, Body Horizontal
809	Nelson 21140	Horizontal	267	166	Body Horizontal
810	Nelson 21161	Inverted	154	166	Body Horizontal

*n/d: no diagram; image temporarily unavailable

2002 QUALIFIED AND RATED LIST—GENERAL PURPOSE SPARK ARRESTER

	MANUFACTURER AND MODEL	APPL POS	FLOW	PAGE	REMARKS
811	Nelson 21278	Inverted	40	n/d	See Kohler 278223, Body Horizontal
812	Nelson 21279	Horizontal	49	166	Also identified as ONAN 155-2065
813	Nelson 21315	Horizontal	900	n/d	Body and outlet vertical
814	Nelson 21341	Inverted	106	166	~
815	Nelson 21422	Horizontal	40	n/d	See Kohler 278218, Body Horizontal
816	Nelson 21423	Inverted	44	n/d	See Kohler 278224, Body Horizontal
817	Nelson 21423B	Horizontal	44	n/d	See Kohler 278224:Body of arrester Horizontal
818	Nelson 21517	Vertical	245	n/d	~
819	Nelson 21549	Horizontal	57	n/d	~
820	Nelson 21616	Vertical	107	n/d	Body Horizontal
821	Nelson 21645	Horizontal	40	n/d	Modified Kohler 278223, Body Horizontal
822	Nelson 21709	Horizontal	82	n/d	~
823	Nelson 21721	Horizontal	36	167	~
824	Nelson 21758	Horizontal	571	167	~
825	Nelson 21800	Horizontal	128	167	Horizontal inlet & body; Vertical outlet
826	Nelson 21800A	Horizontal	128	167	Modified Nelson 21800. Body Horizontal
827	Nelson 21800C	Horizontal	128	167	Modified Nelson 21800. Body Horizontal
828	Nelson 21863	Horizontal	255	167	Inlet & outlet Horizontal; Body vertical
829	Nelson 21884	Vertical	178	167	Body Horizontal
830	Nelson 21928	Horizontal	82	167	Body Horizontal
831	Nelson 21950	Vertical	188	168	Body Horizontal
832	Nelson 21950B	Vertical	188	168	Modified Nelson 21950
833	Nelson 22157	Inverted	46	168	Modified Nelson 16362. Body Horizontal
834	Nelson 22171B	Horizontal	54	168	See Onan 155-2416
835	Nelson 22255	Vertical	250	168	Outlet vertical, Body Horizontal
836	Nelson 22389	Horizontal	67	168	Body Horizontal
837	Nelson 22416	Vertical	160	164	Modified Nelson 20608
838	Nelson 22506	Vertical	62	169	Body Horizontal
839	Nelson 22506A	Vertical	62	169	Body Horizontal
840	Nelson 22627	Vertical	111	169	Body Horizontal
841	Nelson 22671	Horizontal	84	169	Modified Nelson 22672
842	Nelson 22672	Horizontal	84	169	Horizontal inlet, body & outlet
843	Nelson 22737	Horizontal	44	169	See Kohler 278224; Body of arrester Horizontal
844	Nelson 22755	Horizontal	43	169	See Kohler 239724

*n/d: no diagram; image temporarily unavailable

2002 QUALIFIED AND RATED LIST—GENERAL PURPOSE SPARK ARRESTER

	MANUFACTURER AND MODEL	APPL POS	FLOW	PAGE	REMARKS
845	Nelson 22777	Horizontal	40	169	See Kohler 278223; Body of arrester Horizontal
846	Nelson 22801A	Horizontal	54	169	Modified Nelson 22171-B
847	Nelson 22807A	Vertical	405	169	~
848	Nelson 22823	Horizontal	71	170	~
849	Nelson 22836	Horizontal	36	n/d	Modified Nelson 21721
850	Nelson 22904	Inverted	36	170	Modified Nelson 19820
851	Nelson 22917	Horizontal	55	170	~
852	Nelson 22992	Vertical	183	170	Body and outlet Horizontal
853	Nelson 22992A	Vertica	205	170	Vertical inlet, horizontal body
854	Nelson 23069	Horizontal	28	170	Modified Nelson 19826
855	Nelson 23094	Vertical	124	160	Modified Nelson 19382, Body/Arrester Horizontal
856	Nelson 23096	Vertical	206	170	~
857	Nelson 23137	Vertical	64	171	Body Horizontal, outlet down
858	Nelson 23162	Inverted	106	171	Modified N-21341 diff. support bracket
859	Nelson 23259A	Multiple	30	171	Screen; 4-cycle, 4 hp or smaller, Onan 155-2514
860	Nelson 23483	Horizontal	31	n/d	Modified Nelson 21721
861	Nelson 23511A	Vertical	87	171	Body horizontal, inlet inverted
862	Nelson 23516A	Multiple	30	n/d	Screen; 4-cycle, 4hp or smaller; see Nelson 20578
863	Nelson 23643	Vertical	112	171	Vertical, body horizontal
864	Nelson 23697	Vertical	127	171	Body Horizontal
865	Nelson 23718	Horizontal	64	172	Modified Nelson 20990
866	Nelson 23726	Horizontal	85	n/d	Two horizontal inlets, one outlet
867	Nelson 23727	Vertical	92	n/d	Modified Nelson 38195-A
868	Nelson 23746	Vertical	152	172	~
869	Nelson 23843	Horizontal	32	172	~
870	Nelson 23852	45° from inv	148	172	Cleanout plug 45 deg. from outlet
871	Nelson 23860	Horizontal	33	172	~
872	Nelson 23893	Horizontal	228	172	Body Inverted
873	Nelson 24035	Vertical	159	173	~
874	Nelson 24083	Vertical	223	173	~
875	Nelson 24108A	Multiple	30	n/d	Screen; 4-cycle, 4.0 hp or smaller
876	Nelson 24148	Horizontal	1,027	173	~
877	Nelson 24180	Horizontal	281	174	~
878	Nelson 24304	Vertical	131	174	~

*n/d: no diagram; image temporarily unavailable

2002 QUALIFIED AND RATED LIST—GENERAL PURPOSE SPARK ARRESTER

	MANUFACTURER AND MODEL	APPL POS	FLOW	PAGE	REMARKS
879	Nelson 24379	Vertical	168	174	Qualified with or without the catalytic converter can in place
880	Nelson 24459	Vertical	895	174	~
881	Nelson 24707	Vertical	177	174	~
882	Nelson 24710	Vertical	159	174	Body horizontal
883	Nelson 24711	Vertical	131	175	Body horizontal
884	Nelson 24745	Horizontal	121	175	~
885	Nelson 24752	Vertical	168	175	Body horizontal, qualified with or without the catalytic converter can in place.
886					
887	Nelson 24756N	Horizontal	49	175	~
888	Nelson 24800	Vertical	117	175	~
889	Nelson 24839	Vertical	242.4	175	~
890	Nelson 24842	Vertical	280	176	Body horizontal
891	Nelson 24866-B	Inverted	25	176	Body horizontal
892	Nelson 24931	Horizontal	92	176	~
893	Nelson 24953	Vertical	69	176	~
894	Nelson 25007	Horizontal	52	176	~
895	Nelson 25012	Vertical	135	176	~
896	Nelson 25026	Vertical	231	177	~
897	Nelson 25133	Vertical	894	177	~
898	Nelson 25191	Inverted	38	177	~
899	Nelson 25237	Horizontal	71	177	~
900	Nelson 25239-A	Horizontal	118	177	~
901	Nelson 25602A	Horizontal	36	177	~
902	Nelson 25640	Vertical	43	178	~
903	Nelson 25766	Multiple	48	178	Screen; 4-cycle, 8 hp or smaller
904	Nelson 25771	Horizontal	160	178	Inlet 49° off vertical
905	Nelson 25868N	Horizontal	46.6	178	~
906	Nelson 25986	Horizontal	83.5	178	
907	Nelson 26054A	Horizontal	47.7	n/d	~
908	Nelson 26147	Horizontal	113	178	~
909	Nelson 26201A	Horizontal	105.2	179	~
910	Nelson 26252	Vertical	234	n/d	~
911	Nelson 26281	Horizontal	82.7	n/d	~
912	Nelson 26294	Horizontal	79.8	179	~

*n/d: no diagram; image temporarily unavailable

2002 QUALIFIED AND RATED LIST—GENERAL PURPOSE SPARK ARRESTER

	MANUFACTURER AND MODEL	APPL POS	FLOW	PAGE	REMARKS
913	Nelson 26296	Horizontal	74.5	179	~
914	Nelson 26359	Horizontal	101	179	~
915	Nelson 26438	Horizontal	66.3	179	~
916	Nelson 26454	Horizontal	88	179	~
917	Nelson 26465	Horizontal	177.2	180	~
918	Nelson 26503	Horizontal	46	180	~
919	Nelson 26617	Horizontal	13	180	~
920	Nelson 26710	Horizontal	66	n/d	~
921	Nelson 26710N	Horizontal	77.3	n/d	~
922	Nelson 26749	Horizontal	69	180	~
923	Nelson 26875	Horizontal	435	180	~
924	Nelson 26876	Horizontal	1,056	180	~
925	Nelson 26897	Horizontal	63.2	181	See Onan 155-3151
926	Nelson 27021	Horizontal	71	181	Modified external bracket
927	Nelson 27137	Horizontal	32	181	~
928	Nelson 27173	Horizontal	234.4	181	~
929	Nelson 27174	Horizontal	67	181	~
930	Nelson 27196A	Horizontal	63.4	181	~
931	Nelson 27222	Horizontal	73	182	~
932	Nelson 27258	Horizontal	72	n/d	~
933	Nelson 27404A	Horizontal	484	182	~
934	Nelson 27453	Vertical inlet,			
935		horizontal body	258	182	~
936	Nelson 27453A	Vertical inlet,			
937		horizontal body	234	182	~
938	Nelson 27475	Horizontal	217.5	182	~
939	Nelson 27522	Horizontal	89	182	~
940	Nelson 27543A	Horizontal	262	182	~
941	Nelson 27692	Vertical inlet,			
942		horizontal body	254	183	~
943	Nelson 27780	Horizontal	72	183	~
944	Nelson 27890	Horizontal	67	183	~
945	Nelson 27901	Horizontal	102.8	183	~
946	Nelson 27906	Vertical	166	183	~

*n/d: no diagram; image temporarily unavailable

2002 QUALIFIED AND RATED LIST—GENERAL PURPOSE SPARK ARRESTER

	MANUFACTURER AND MODEL	APPL POS	FLOW	PAGE	REMARKS
947	Nelson 28057N	Horizontal	737.3	183	~
948	Nelson 28061N	Horizontal	560	184	~
949	Nelson 28070N	Horizontal	608	184	~
950	Nelson 28151	Horizontal	75	184	~
951	Nelson 28186	Horizontal	130	184	~
952	Nelson 28416	Multiple	30	184	~
953	Nelson 28440	Horizontal	114	n/d	~
954	Nelson 28457	Vertical	212.8	184	~
955	Nelson 28472	Horizontal	82	185	~
956	Nelson 28478A	~	~	185	~
957	Nelson 28479A	~	~	185	~
958	Nelson 28619	Horizontal	68.9	185	~
959	Nelson 28664	Horizontal	25.4	n/d	~
960	Nelson 29222	Horizontal	75	185	~
961	Nelson 29304	Horizontal	71	n/d	See Nelson 27021
962	Nelson 30134	Vertical	298	185	~
963	Nelson 30670	Vertical	352	185	~
964	Nelson 35347	Multiple	81	186	Screen; 4-cycle, 23 hp for use on Nelson 16184, 16348,
965				186	17605, 17814, 18672 and 21146 mufflers.
966	Nelson 38195	Vertical	104	186	Outlet horizontal. Body horizontal
967	Nelson 38196	Horizontal	111	186	2 inlets, body horizontal, outlet inverted
968	Nelson 49013	Multiple	118	186	Screen; 4-cycle, 20 hp or smaller
969	Nelson 49017	Multiple	48	186	Screen; 4-cycle, 8hp 19.44 cu. in. or smaller
970	Nelson 49019	Multiple	48	186	Screen; 4-cycle, 8hp 19.44 cu. in. or smaller
971	Nelson 49020	Multiple	54	187	Screen; 4-cycle, 10hp or smaller
972	Nelson 49021	Multiple	67	187	Screen; 4-cycle, 12.5 hp or smaller
973	Nelson 49022	Multiple	89	187	Screen; 4-cycle, 18hp or smaller
974	Nelson 49022 G	Multiple	95	187	Reverse screen cone
975	Nelson 49024	Multiple	118	187	Screen; 4-cycle, 20 hp or smaller
976	Nelson 49025	Multiple	222	187	Screen; 4-cycle, 35 hp or smaller
977	Nelson 49026	Multiple	222	188	Screen, 4-cycle, 35 hp or smaller
978	Nelson 49110	Horizontal	50	188	Approved as T-9458
979	Nelson 49110	Vertical	75	188	Approved as T-9458
980	Nelson 49114	Vertical	105	188	Approved as T-14123

*n/d: no diagram; image temporarily unavailable

2002 QUALIFIED AND RATED LIST—GENERAL PURPOSE SPARK ARRESTER

	MANUFACTURER AND MODEL	APPL POS	FLOW	PAGE	REMARKS
981	Nelson 49114	Horizontal	99	188	~
982	Nelson 49115	Horizontal	123	188	~
983	Nelson 49115	Vertical	24	188	~
984	Nelson 49115C	Vertical &			
985		Horizontal	124	188	49115 with 1 inch pipe inlet, curved outlet
986	Nelson 49119	Horizontal	237	188	~
987	Nelson 49119	Vertical	240	188	~
988	Nelson 49120	Vertical	255	188	~
989	Nelson 49120-F	Vertical	255	188	Inlet may vary 2 inch I.D. to 2 ˇ inch I.D.
990	Nelson 49120-F	Horizontal	260	188	Outlet may vary 2 inch O.D. to 2 ˇ inch I.D.
991					See Nelson U-49120
992	Nelson 49124	Vertical	302	189	~
993	Nelson 49125	Vertical	344	189	~
994	Nelson 49125	Horizontal	347	189	~
995	Nelson 49130	Horizontal	655	189	~
996	Nelson 49130	Vertical	663	189	~
997	Nelson 49135	Vertical	830	189	~
998	Nelson 49135	Horizontal	950	189	~
999	Nelson 49140	Vertical	760	189	~
1000	Nelson 49140	Horizontal	920	189	~
1001	Nelson 49150	Vertical	1,275	189	~
1002	Nelson 49150	Horizontal	1,275	190	~
1003	Nelson 49150U	Horizontal	1,275	190	See also Nelson 49150
1004	Nelson 49150U	Vertical	1,275	190	See also Nelson 49150
1005	Nelson 49160	Horizontal	2,020	190	~
1006	Nelson 49160	Vertical	2,040	190	~
1007	Nelson 613313	Multiple	60	190	Screen; 4-cycle, 12.5 hp or smaller
1008	Nelson 614338	Multiple	87	190	Screen, 4-cycle, 20 hp
1009	Nelson NM 28533	Horizontal	325	190	~
1010	Nelson NM28878	Horizontal	48.4	190	~
1011	Nelson NM49028	Multiple	185	n/d	~
1012	Nelson NM49028	Multiple	200	n/d	~
1013	Nelson NM615351	Multiple	125	191	~
1014	Nelson Q614338	Multiple	101	191	~

*n/d: no diagram; image temporarily unavailable

2002 QUALIFIED AND RATED LIST—GENERAL PURPOSE SPARK ARRESTER

	MANUFACTURER AND MODEL	APPL POS	FLOW	PAGE	REMARKS
1015	Nelson T-10093	Horizontal	20	194	Not qualified above 20 cfm
1016	Nelson T-10115	Vertical	227	194	~
1017	Nelson T-10115	Horizontal	232	194	~
1018	Nelson T-10126	Vertical	122	194	~
1019	Nelson T-10213	Horizontal	213	194	Body Horizontal
1020	Nelson T-10214	Horizontal	348	195	Body Horizontal
1021	Nelson T-10215	Horizontal	394	195	Body Horizontal
1022	Nelson T-10244	Horizontal	520	195	~
1023	Nelson T-10291	Horizontal	33	195	~
1024	Nelson T-10374	Vertical	176	195	Body Horizontal
1025	Nelson T-10409	Horizontal	21	195	~
1026	Nelson T-10705	Horizontal	24	196	~
1027	Nelson T-10792	Horizontal	67	196	Body Horizontal
1028	Nelson T-10860	Horizontal	100	196	~
1029	Nelson T-10895	Horizontal	18	196	~
1030	Nelson T-10897	Vertical	112	196	Body Horizontal
1031	Nelson T-10898	Horizontal	20	196	~
1032	Nelson T-10956	Inverted	808	197	~
1033	Nelson T-10968	Vertical	148	n/d	Body Horizontal
1034	Nelson T-11068C	Inverted	47	197	Body Horizontal
1035	Nelson T-11145	Vertical	382	197	~
1036	Nelson T-11159	Inverted	24	197	~
1037	Nelson T-11336	Horizontal	239	197	Body Horizontal
1038	Nelson T-11337	Vertical	308	197	Body Horizontal
1039	Nelson T-11424	Inverted	63	197	Body Horizontal
1040	Nelson T-11601C	Horizontal	26	198	~
1041	Nelson T-11606	Horizontal	43	198	See Generac 33232
1042	Nelson T-11668	Vertical	164	198	~
1043	Nelson T-11708	Vertical	31	198	P/N NMC-T-11892, Body horizontal
1044	Nelson T-11730H	Horizontal	13	198	~
1045	Nelson T-11842	Inverted	808	198	Same as T-10956
1045	Nelson T-11915	Horizontal	30	199	Body vertical
1047	Nelson T-11927	Horizontal	324	199	~
1048	Nelson T-11976	Vertical	125	199	~

*n/d: no diagram; image temporarily unavailable

2002 QUALIFIED AND RATED LIST—GENERAL PURPOSE SPARK ARRESTER

	MANUFACTURER AND MODEL	APPL POS	FLOW	PAGE	REMARKS
1049	Nelson T-12499	Horizontal	505	199	Body Horizontal
1050	Nelson T-12502	Vertical	227	199	Approved as T-10115
1051	Nelson T-12502	Horizontal	232	199	Approved as T-10115
1052	Nelson T-12760B	Inverted	21	199	Body Horizontal
1053	Nelson T-12761	Inverted	38	200	Body Horizontal
1054	Nelson T-12818	Vertical	305	200	~
1055	Nelson T-12825F	Inverted	28	200	Centerline or offset outlet tube, one or two, clean out plugs.
1056					Body Horizontal
1057	Nelson T-12863	Horizontal	92	200	~
1058	Nelson T-13109	Horizontal	210	200	~
1059	Nelson T-13265	Inverted	23	200	~
1060	Nelson T-13300	Horizontal	11	201	~
1061	Nelson T-13304	Horizontal	50	201	Approved as T-9458
1062	Nelson T-13376	Horizontal	50	201	Approved as T-9458
1063	Nelson T-13473	Horizontal	180	201	Body Horizontal
1064	Nelson T-13502	Horizontal	640	201	Two horizontal inlets. Body Horizontal
1065	Nelson T-13529	Horizontal	69	201	~
1066	Nelson T-13559	Horizontal	17	202	Body Horizontal
1067	Nelson T-13572	Inverted	18	202	Body Horizontal
1068	Nelson T-13651	Vertical	485	202	~
1069	Nelson T-13716	Vertical	425	202	Body Horizontal
1070	Nelson T-13846	Vertical	176	202	Body Horizontal
1071	Nelson T-13919	Vertical	216	202	Body Horizontal
1072	Nelson T-13933	Inverted	93	203	Body Horizontal
1073	Nelson T-13934	Vertical	206	203	~
1074	Nelson T-13935	Vertical	219	203	New Holland No.285187, Body Horizontal
1075	Nelson T-13940	Inverted	125	203	Body Horizontal
1076	Nelson T-13944	Horizontal	33	203	Approved as T-10291
1077	Nelson T-13977	Vertical	205	203	~
1078	Nelson T-13978	Vertical	166	204	~
1079	Nelson T-13979	Vertical	166	204	~
1080	Nelson T-13994	Inverted	213	204	Body Horizontal
1081	Nelson T-13995	Vertical	382	204	~
1082	Nelson T-13995	Horizontal	388	204	~

*n/d: no diagram; image temporarily unavailable

2002 QUALIFIED AND RATED LIST—GENERAL PURPOSE SPARK ARRESTER

	MANUFACTURER AND MODEL	APPL POS	FLOW	PAGE	REMARKS
1083	Nelson T-13999	Inverted	30	204	Body Horizontal
1084	Nelson T-14000	Inverted	42	204	Two inlets. Body Horizontal
1085	Nelson T-14002	Horizontal	11	205	Body vertical
1086	Nelson T-14005	Vertical	380	205	~
1087	Nelson T-14066	Vertical	204	205	Approved as T-9213
1088	Nelson T-14066	Horizontal	208	205	Approved as T-9213
1089	Nelson T-14090	Horizontal	59	205	Body Horizontal
1090	Nelson T-14099	Inverted	178	205	Body Horizontal
1091	Nelson T-14105	Horizontal	169	205	~
1092	Nelson T-14106	Horizontal	69	206	Approved as T-1352
1093	Nelson T-14110B	Vertical	421	206	~
1094	Nelson T-14116	Horizontal	51	206	Body Horizontal
1095	Nelson T-14123	Horizontal	99	206	Body Horizontal
1096	Nelson T-14125	Inverted	50	206	Body Horizontal
1097	Nelson T-14214	Horizontal	153	n/d	~
1098	Nelson T-14217	Horizontal	183	206	~
1099	Nelson T-14219	Vertical	300	207	~
1100	Nelson T-14220	Vertical	683	207	Two inlets; one outlet
1101	Nelson T-14222	Vertical	225	207	~
1102	Nelson T-14223	Horizontal	150	207	~
1103	Nelson T-14223	Vertical	160	207	~
1104	Nelson T-14224	Vertical	170	207	~
1105	Nelson T-14315	Inverted	68	207	Body Horizontal
1106	Nelson T-14316	Horizontal	74	207	Body Horizontal
1107	Nelson T-14321	Inverted	25	208	Body Horizontal
1108	Nelson T-14327	Vertical	505	n/d	Approved as T-12499
1109	Nelson T-14334	Horizontal	543	208	Body Vertical
1110	Nelson T-14334	Vertical	561	208	With eductor tube, Body Horizontal
1111	Nelson T-14382	Horizontal	520	208	Approved as T-10244
1112	Nelson T-14390	Vertical	111	208	~
1113	Nelson T-14402	Horizontal	147	n/d	~
1114	Nelson T-14403	Horizontal	155	208	~
1115	Nelson T-14406	Horizontal	69	208	Approved as T-13529
1116	Nelson T-14415	Vertical	205	209	Body Horizontal

*n/d: no diagram; image temporarily unavailable

2002 QUALIFIED AND RATED LIST—GENERAL PURPOSE SPARK ARRESTER

	MANUFACTURER AND MODEL	APPL POS	FLOW	PAGE	REMARKS
1117	Nelson T-14425	Horizontal	99	209	Approved as T-14123
1118	Nelson T-14529	Vertical	275	209	~
1119	Nelson T-14630	Horizontal	240	209	Body Horizontal
1120	Nelson T-14631	Vertical	315	209	Body Horizontal
1121	Nelson T-14671	Horizontal	147	209	~
1122	Nelson T-14688	Horizontal	75	210	Body Vertical
1123	Nelson T-14754	Horizontal	261	210	~
1124	Nelson T-14816	Horizontal	210	210	~
1125	Nelson T-14853	Inverted	69	210	See ONAN 155-1485
1126	Nelson T-14907	Vertical	209	210	Body Horizontal
1127	Nelson T-15077	Inverted	47	210	~
1128	Nelson T-15078	Horizontal	48	211	Body Horizontal
1129	Nelson T-15079	Horizontal	57	211	Body Horizontal
1130	Nelson T-15080	Horizontal	67	211	Body Horizontal
1131	Nelson T-15215	Horizontal	136	211	~
1132	Nelson T-15341	Horizontal	92	211	Two inlets; One outlet. Body Horizontal
1133	Nelson T-15611	Horizontal	65	211	Body Horizontal
1134	Nelson T-15688	Horizontal	513	212	Body Vertical
1135	Nelson T-15689	Horizontal	618	212	Body Vertical
1136	Nelson T-6277	Vertical	154	191	~
1137	Nelson T-7033	Vertical	250	191	~
1138	Nelson T-7359	Vertical	245	191	~
1139	Nelson T-7515	Vertical	335	191	~
1140	Nelson T-8680	Vertical	262	191	~
1141	Nelson T-8714	Horizontal	417	191	~
1142	Nelson T-8714	Vertical	429	191	~
1143	Nelson T-9098	Horizontal	141	192	Not qualified above 141 cfm
1144	Nelson T-9099	Horizontal	194	192	~
1145	Nelson T-9099	Vertical	196	192	~
1146	Nelson T-9213	Vertical	204	192	~
1147	Nelson T-9213	Horizontal	208	192	~
1148	Nelson T-9219	Vertical	164	192	Body Horizontal
1149	Nelson T-9220	Vertical	170	192	Body Horizontal
1150	Nelson T-9304	Vertical	438	192	~

*n/d: no diagram; image temporarily unavailable

2002 QUALIFIED AND RATED LIST—GENERAL PURPOSE SPARK ARRESTER

	MANUFACTURER AND MODEL	APPL POS	FLOW	PAGE	REMARKS
1151	Nelson T-9356	Vertical	450	193	~
1152	Nelson T-9356	Horizontal	474	193	~
1153	Nelson T-9370	Vertical	198	193	~
1154	Nelson T-9457	Horizontal	50	193	~
1155	Nelson T-9458	Horizontal	50	193	~
1156	Nelson T-9460	Horizontal	37	193	~
1157	Nelson T-9489	Inverted	76	193	~
1158	Nelson T-9605	Vertical	146	193	See John Deere AT-33686
1159	Nelson T-9605	Horizontal	148	193	See John Deere AT-33686
1160	Nelson T-9932	Horizontal	415	194	~
1161	Nelson T-9932	Vertical	426	194	~
1162	Nelson T-9995	Vertical	31	194	Body Horizontal
1163	Nelson-Burgess 17AE07	Vertical	213	213	Also identified as 10420A
1164	Nelson-Burgess 17AE08	Vertical	227	213	Also identified as 10250A
1165	Nelson-Burgess 17AE10	Vertical	219	213	Also identified as 10255A
1166	Nelson-Burgess 17AE12	Vertical	226	213	Also identified as 10415A
1167	Nelson-Burgess 17AE14	Vertical	258	213	Also identified as 10421A
1168	Nelson-Burgess 20965	Horizontal	108	213	Distance between inlet and outlet maybe10.2 or 12 inches.
1169					Body Horizontal.
1170	Nelson-Burgess 39616	Horizontal	323	214	~
1171	O&R 76	Multiple	16	214	Screen; 2-cycle 1 hp or smaller
1172	Onan 0155-3110	Horizontal	46	217	~
1173	Onan 0155-3314	Multiple	30	184	See Nelson 28416
1174	Onan 155-1254	Horizontal	92	214	See Nelson T-12863
1175	Onan 155-1258	Inverted	28	214	See Nelson T-12825F
1176	Onan 155-1485	Inverted	69	215	See Nelson T-14853
1177	Onan 155-1520	Inverted	42	215	See Nelson 15893
1178	Onan 155-1698	Vertical	75	215	See Nelson 16752
1179	Onan 155-2047	Horizontal	38	215	See Nelson 19822
1180	Onan 155-2048	Horizontal	36	215	See Nelson 19820
1181	Onan 155-2065	Horizontal	49	215	See Nelson 21279
1182	Onan 155-2085	Horizontal	36	161	See Nelson 20665
1183	Onan 155-2086	Horizontal	38	161	See Nelson 20666
1184	Onan 155-2098	Horizontal	66	161	See Nelson 20513

*n/d: no diagram; image temporarily unavailable

2002 QUALIFIED AND RATED LIST—GENERAL PURPOSE SPARK ARRESTER

	MANUFACTURER AND MODEL	APPL POS	FLOW	PAGE	REMARKS
1185	Onan 155-2186	Multiple	30	216	Screen; 4-cycle, 4 hp or smaller; Nelson 20578
1186	Onan 155-2186	Multiple	30	216	Screen; 4-cycle, 4 hp or smaller
1187	Onan 155-2262	Horizontal	82	216	See Nelson 21709
1188	Onan 155-2416	Horizontal	54	216	~
1189	Onan 155-2514	Multiple	30	171	Screen; 4-cycle, 4hp or smaller; Nelson 23295A
1190	Onan 155-2783	Inverted	25	216	Body horizontal
1191	Onan 155-2885	Vertical	43	216	See Nelson 25640
1192	Onan 155-2951	Horizontal	71	217	See Nelson 25191
1193	Onan 155-3151	Horizontal	63.2	181	See Nelson 26897
1194	Pacific Pumper				SEE WAJAX-PACIFIC
1195	Performance Industries Group P.I.G. 1	Multiple		217	Screen type
1196	PKM II	Special purpose	38	n/d	For use on 7 hp, 4-cycle engine-driven generator only
1197	Polaris 1206702	Horizontal	44	n/d	Modified Polaris 1260588
1198	Polaris 1206741	Horizontal	75	n/d	See Polaris 1260535
1199	Polaris 1260510	Horizontal	41	218	~
1200	Polaris 1260520	Horizontal	65	218	~
1201	Polaris 1260535	Horizontal	75	218	~
1202	Polaris 1260535-5	Horizontal	75	218	Modified Polaris 1260535
1203	Polaris 1260544	Horizontal	75	218	Modified Polaris 1260535
1204	Polaris 1260576	Horizontal	75	218	Modified Polaris 1260535
1205	Polaris 1260588	Horizontal	44	218	~
1206	Polaris 1260616	Horizontal	44	n/d	Modified Polaris 1260588
1207	Polaris 1260629	Horizontal	61	218	~
1208	Polaris 1260702	Horizontal	44	218	Modified Polaris 1260588
1209	Polaris 1260715	Horizontal	55	218	~
1210	Polaris 1260741	Horizontal	75	218	See Polaris 1260535
1211	Polaris 1260742	Horizontal	61	219	See Polaris 1260629
1212	Polaris 1260745	Horizontal	85.9	219	~
1213	Polaris 1260807	Horizontal	55	219	~
1214	Polaris 1260843	Horizontal	55	219	~
1215	Polaris 1260869	Horizontal	73.5	219	~
1216	Polaris 1260884	Horizontal	100	219	~
1217	Polaris 1260891	Horizontal	73	220	~
1218	Polaris 1260894	Horizontal	73	220	See Polaris 1260891

*n/d: no diagram; image temporarily unavailable

2002 QUALIFIED AND RATED LIST—GENERAL PURPOSE SPARK ARRESTER

	MANUFACTURER AND MODEL	APPL POS	FLOW	PAGE	REMARKS
1219	Polaris 1260903	Horizontal	73.5	220	See Polaris 1260869
1220	Polaris 1260903	Horizontal	74	220	See Polaris 1260869
1221	Polaris 1260910	Horizontal	75	220	See Polaris 1260535
1222	Polaris 1260930	Horizontal	73.6	220	~
1223	Polaris 1260961	Horizontal	73	220	See also 1260977
1224	Polaris 1260968	Horizontal	73	221	~
1225	Polaris 1260977	Horizontal	73	221	~
1226	Polaris 1260989	Horizontal	55	221	See also 1260715
1227	Polaris 1261006	Horizontal	74	221	~
1228	Polaris 1261022	Horizontal	75	n/d	~
1229	Polaris 1261042	Horizontal	55	221	See Polaris 1260715
1230	Polaris 1261079	Horizontal	55	n/d	
1231	Polaris 1261223	Horizontal	55	n/d	See Polaris 1260715
1232	Powell No. F	Horizontal	27	222	~
1233	Pro-Circuit PC 2100	Multiple	298	n/d	~
1234	Pro-Circuit PC-0070-0	Horizontal	89.8	n/d	~
1235	Pro-Circuit PC-007-OS	Horizontal	90	222	~
1236	Pro-Circuit PC-007-R	Horizontal	89.8	223	~
1237	Pro-Circuit T-4	Multiple	226	n/d	Screen type
1238	Pro Moto Billet # T401	Multiple	198	n/d	Screen type, used on Honda CDF 450 R, Yamaha YZ426 F,
1239					YZ400F, YZ250F, KTM 520 MXC, KTM 520 SX
1240					or smaller motorcycles.
1241	Reliable M-07-0285	Vertical	512	223	~
1242	Riker SA-200	Vertical	208	224	~
1243	Riker SA-200	Horizontal	208	224	~
1244	Riker SA2009	Horizontal	273	n/d	See Donaldson FCM0600037
1245	Riker SA2009	Vertical	296	n/d	See Donaldson FCM0600037
1246	Riker SA2059	Horizontal	427	n/d	See Donaldson FCM065030
1247	Riker SA2059	Vertical	436	n/d	See Donaldson FCM065030
1248	Riker SA-250	Vertical	345	224	~
1249	Riker SA-250	Horizontal	369	224	~
1250	Riker SA-300	Vertical &			
1251		Horizontal	400	224	~
1252	Riker SA3009	Horizontal	597	n/d	See Donaldson FCM070068

*n/d: no diagram; image temporarily unavailable

2002 QUALIFIED AND RATED LIST—GENERAL PURPOSE SPARK ARRESTER

	MANUFACTURER AND MODEL	APPL POS	FLOW	PAGE	REMARKS
1253	Riker SA3009	Vertical	644	n/d	See Donaldson FCM070068
1254	Riker SA-350	Vertical	545	224	~
1255	Riker SA-350	Horizontal	587	224	~
1256	Riker SA-350-1	Vertical	381	224	Modified SA-350
1257	Riker SA3509	Horizontal	842	n/d	See Donaldson FCM070069
1258	Riker SA3509	Vertical	881	n/d	See Donaldson FCM070069
1259	Riker SA-353	Horizontal	517	224	~
1260	Riker SA-400	Vertical	585	224	~
1261	Riker SA4009	Horizontal	1,177	n/d	See Donaldson FCM080024
1262	Riker SA4009	Vertical	1,200	n/d	See Donaldson FCM080024
1263	Riker SA-400A	Horizontal	582	224	~
1264	Riker SA-400A	Vertical	600	224	~
1265	Riker SA-401	Vertical	680	224	~
1266	Riker SA-401	Horizontal	723	224	~
1267	Riker SA-408	Horizontal	860	225	~
1268	Riker SA-408	Vertical	900	225	~
1269	Riker SA-409	Horizontal	809	225	Modified SA-408
1270	Riker SA-500	Vertical	979	225	~
1271	Riker SA-500	Horizontal	989	225	~
1272	Riker SA5009	Horizontal	1,630	n/d	See Donaldson FCM090091
1273	Riker SA5009	Vertical	1,670	n/d	See Donaldson FCM090091
1274	Riker SA6009	Horizontal	2,480	n/d	See Donaldson FCM100016
1275	Riker SA6009	Vertical	2,660	n/d	See Donaldson FCM100016
1276	Riker SA-6762	Vertical	550	225	Modified SA-408 in muffler shell.
1277	Rupp 32004	Horizontal	24	225	~
1278	Skyway 1000	Horizontal	40	226	~
1279	Skyway 2500	Horizontal	74	226	~
1280	Skyway 300 Series	Horizontal	107	226	~
1281	Skyway 510 Series 300	Horizontal	60	226	Body length may vary from 8.5 to 16.5 inches
1282	Skyway-Cobra 300	Horizontal	176	n/d	Modified Skyway-Cobra 300 add-on w/angled body
1283	Skyway-Cobra 300-1	Horizontal	161	226	Motorcycle
1284	Soundmaster 1578	Vertical	296	n/d	~
1285	Soundmaster 21578	Horizontal	273	n/d	~
1286	Soundmaster 21579	Vertical	436	n/d	~

*n/d: no diagram; image temporarily unavailable

2002 QUALIFIED AND RATED LIST—GENERAL PURPOSE SPARK ARRESTER

	MANUFACTURER AND MODEL	APPL POS	FLOW	PAGE	REMARKS
1287	Soundmaster 21579	Horizontal	427	n/d	~
1288	Soundmaster 21580	Horizontal	597	n/d	~
1289	Soundmaster 21580	Vertical	644	n/d	~
1290	Soundmaster 21581	Vertical	881	n/d	~
1291	Soundmaster 21581	Horizontal	842	n/d	~
1292	Soundmaster 21582	Vertical	1,200	n/d	~
1293	Soundmaster 21582	Horizontal	1,177	n/d	~
1294	Soundmaster 21584	Vertical	1,670	n/d	~
1295	Soundmaster 21584	Horizontal	1,630	n/d	~
1296	Soundmaster 21585	Inverted	28	n/d	See Nelson 12825F
1297	Soundmaster 22005	Horizontal	2,020	n/d	~
1298	Soundmaster 22005	Vertical	2,040	n/d	~
1299	Soundmaster 35807	Horizontal	123	n/d	~
1300	Soundmaster 35807	Vertical	124	n/d	~
1301	Sparester 601	Horizontal	53	n/d	~
1302	Sparester 602	Inverted	47	227	~
1303	Sparester 801	Horizontal	97	227	~
1304	Sparester SA-100	Horizontal	147	227	~
1305	Sparester SA-120	Horizontal	233	227	~
1306	Sparester SA-140	Horizontal	285	227	~
1307	Sparester SA-160	Horizontal	350	227	~
1308	Sparester SA-190	Horizontal	541	228	~
1309	Sparester SA-240	Horizontal	669	228	~
1310	Sparester SA-280	Horizontal	995	228	~
1311	Sparky	Horizontal	176	228	~
1312	Stemco 262-1059	Horizontal	273	228	See Donaldson FCM06-0037
1313	Stemco 262-1059	Vertical	296	n/d	See Donaldson FCM06-0037
1314	Stemco 262-1060	Horizontal	427	n/d	See Donaldson FCM06-5030
1315	Stemco 262-1060	Vertical	436	n/d	See Donaldson FCM06-5030
1316	Stemco 262-1061	Horizontal	597	n/d	See Donaldson FCM07-0068
1317	Stemco 262-1061	Vertical	644	n/d	See Donaldson FCM07-0068
1318	Stemco 262-1062	Horizontal	842	n/d	See Donaldson FCM07-0069
1319	Stemco 262-1062	Vertical	881	n/d	See Donaldson FCM07-0069
1320	Stemco 262-1063	Horizontal	1,177	n/d	See Donaldson FCM08-0024

*n/d: no diagram; image temporarily unavailable

2002 QUALIFIED AND RATED LIST—GENERAL PURPOSE SPARK ARRESTER

	MANUFACTURER AND MODEL	APPL POS	FLOW	PAGE	REMARKS
1321	Stemco 262-1063	Vertical	1,200	n/d	See Donaldson FCM08-0024
1322	Stemco 262-1064	Horizontal	1,630	n/d	See Donaldson FCM09-0091
1323	Stemco 262-1064	Vertical	1,670	n/d	See Donaldson FCM09-0091
1324	Stemco 262-2020	Horizontal	260	n/d	See Nelson U-49120
1325	Stemco 262-2025	Horizontal	347	n/d	See Nelson U-49125
1326	Stemco 262-2030	Vertical	633	n/d	See Nelson U-49130
1327	Stemco 262-2035	Vertical	830	n/d	See Nelson 49135
1328	Stemco 262-2035	Horizontal	950	n/d	See Nelson 49135
1329	Stemco 262-2040	Horizontal	920	n/d	See Nelson 49140
1330	Stemco 262-2050	Horizontal	1,275	n/d	See Nelson 49150
1331	Stemco 262-2050	Vertical	1,275	n/d	See Nelson 49150
1332	Stemco 595M	Inverted	675	229	See Stemco 595M
1333	Strader 200	Horizontal	29	229	~
1334	Strader 400	Horizontal	46	229	Not qualified above 46 cu ft/min
1335	Summit Industries Jardine Performance	Multiple	141	229	~
1336	Supertrapp T-100	Multiple	243	230	~
1337	Supertrapp T-101	Multiple	170	230	~
1338	Supertrapp T-102	Multiple	64	230	~
1339	Supertrapp T-99	Multiple	31	230	~
1340	Suzuki HS-050	Multiple	36	n/d	Screen type
1341	Suzuki HS-050-1	Multiple	63	n/d	~
1342	Suzuki HS-1	Horizontal	5	231	~
1343	Suzuki HS-10	Multi	68	233	Screen; 4-cycle, 14 hp or less
1344	Suzuki HS-11	Multiple	15	n/d	~
1345	Suzuki HS-2	Multiple	13	231	Screen; 4-cycle, 1.6 hp or less
1346	Suzuki HS-250-1	Multiple	109	233	~
1347	Suzuki HS-3	Multiple	51	231	Screen; 4-cycle, 7.8 hp or less
1348	Suzuki HS-4	Multiple	22	231	Screen; 2-cycle, 1.8 hp or less
1349	Suzuki HS-400-1	Multiple	180	233	~
1350	Suzuki HS-410-1	Multiple	180	n/d	~
1351	Suzuki HS-5	Multiple	25	231	Screen; 4-cycle, 4.2 hp or less
1352	Suzuki HS-500-1	Multiple	175	233	~
1353	Suzuki HS-5A	Multiple	25	231	Screen; 4-cycle, 3.8 hp or smaller
1354	Suzuki HS-5AB	Multi	30	232	Screen, 4-cycle, 6.0 hp

*n/d: no diagram; image temporarily unavailable

2002 QUALIFIED AND RATED LIST—GENERAL PURPOSE SPARK ARRESTER

	MANUFACTURER AND MODEL	APPL POS	FLOW	PAGE	REMARKS
1355	Suzuki HS-6	Multiple	25	232	Screen; 4-cycle, 4.2 hp or less
1356	Suzuki HS-7	Multiple	41	232	Screen; 4-cycle, 9.0 hp or smaller
1357	Suzuki HS-7A	Multiple	41	232	Screen; 4-cycle, 9.0 hp or smaller
1358	Suzuki HS-7B	Multi	44	n/d	Screen, 4-cycle, 9.0 hp
1359	Suzuki HS-8	Multiple	22	232	Screen; 2-cycle, 1.8 hp hp or smaller
1360	Suzuki HS-9	Multi	68	232	Screen; 4-cycle, 14 hp or less
1361	Suzuki KS-450	Horizontal	82	233	~
1362	Suzuki KS-450-1	Horizontal	42	233	~
1363	Suzuki KS-450-2	Horizontal	83	234	~
1364	Suzuki KS-450-3	Horizontal	48	234	~
1365	Suzuki-Krizman K-15	Horizontal	20	234	~
1366	Suzuki-Krizman KS-250	Horizontal	27	234	Additional cross reference 345/419
1367	Suzuki-Krizman KS-250	Horizontal	26	234	For SE 1500 & SE 2500
1368	Suzuki-Krizman KS-250 (for Alt 50)	Horizontal	17	235	~
1369	Suzuki-Krizman KS-250 (for TM 75)	Horizontal	20	235	~
1370	Suzuki-Krizman KS-250 (for TS 80)	Horizontal	23	235	~
1371	Suzuki-Krizman KS-250M	Horizontal	25	235	TM 75&TC 100K Motorcycle cycle muffler
1372	Suzuki-Krizman KS-350-3	Horizontal	39	235	~
1373	Suzuki-Krizman KS-350-3	Horizontal	30	235	For LT 185
1374	Suzuki-Krizman KS-350-3	Horizontal	30	235	For LT 250
1375	Suzuki-Krizman KS-351	Horizontal	50	n/d	~
1376	Suzuki-Krizman KS-400	Horizontal	84	235	~
1377	Suzuki-Krizman KS-400 (for PE 250)	Horizontal	39	236	~
1378	Suzuki-Krizman KS-400-1	Horizontal	47	236	Modified KS-400
1379	Suzuki-Sparester 2-1	Horizontal	72.6	234	~
1380	Suzuki-Sparester 2-3	Horizontal	73	234	~
1381	Suzuki-Sparester 801	Horizontal	97	237	~
1382	Suzuki-Sparester 801 LT500R	Horizontal	73	237	~
1383	Suzuki-Sparester 801 X19AOX	Horizontal	97	237	Suzuki LT250RATV
1384	Suzuki-Sparester 801 X19BOX	Horizontal	53	237	~
1385	Suzuki-Sparester 801 X22AOX	Horizontal	97	237	On Suzuki LT120SATV, one clean out plug; On Suzuki
1386					LT230EATV, two clean out plugs.
1387	Suzuki-Sparester 801-X0523X	Horizontal	46	237	~
1388	Suzuki-Sparester-1	Horizontal	81	n/d	~

*n/d: no diagram; image temporarily unavailable

2002 QUALIFIED AND RATED LIST—GENERAL PURPOSE SPARK ARRESTER

	MANUFACTURER AND MODEL	APPL POS	FLOW	PAGE	REMARKS
1389	Suzuki-Sparester-1 DR-400	Horizontal	87	n/d	~
1390	Suzuki-Sparester-1 LT-80	Horizontal	25	n/d	~
1391	Suzuki-Sparester-1 PE-175	Horizontal	87	n/d	~
1392	Suzuki-Sparester-1 PE-250	Horizontal	87	n/d	~
1394	Suzuki-Sparester-1 PE-400	Horizontal	87	n/d	~
1395	Suzuki-Sparester-1 X02C0X	Horizontal	33	n/d	~
1396	Suzuki-Sparester-1-1	Horizontal	61	n/d	~
1397	Suzuki-Sparester-1-2	Horizontal	42	n/d	~
1398	Suzuki-Sparester-1-3	Horizontal	42	n/d	Enlarged inlet bell
1399	Suzuki-Sparester-2-1	Horizontal	72.6	n/d	~
1400	Suzuki-Sparester-2-3	Horizontal	69.1	n/d	~
1401	Suzuki-Sparester-801-1	Horizontal	61	n/d	~
1402	Suzuki-Sparester-850	Horizontal	57	n/d	~
1403	Suzuki-Sparester-850-1	Horizontal	49	n/d	~
1404	Taga Corporation & Japan Design	Horizontal	370	n/d	Muffler body must be labeled screen type
1405	Taylor 100	Multiple	26	238	Screen; 4-cycle, 4 hp or less
1406	Taylor 200	Multiple	46	238	Screen; 4-cycle, 8 hp or less
1407	Taylor 300	Multiple	46	238	Screen; 4-cycle, 7 hp or less
1408	Taylor 400	Multiple	26	238	Screen; 4-cycle, 4 hp or less
1409	Taylor 400A	Multiple	26	238	Screen; 4-cycle, 4 hp or less
1420	Taylor 750	Multiple	30	238	Screen; 4-cycle, 10 hp or less
1421	Taylor 750A	Multiple	46	239	Screen; 4-cycle, 8 hp or less
1422	Taylor 751	Multiple	61	239	Screen; 4-cycle, 10 hp or less
1423	Taylor 800	Multiple	64	239	Screen; 2-cycle, 5.5 hp or less
1424	Taylor 800	Multiple	46	239	Screen; 4-cycle, 8 hp or less
1425	Taylor 900	Multiple	57	239	Screen; 4-cycle, 10 hp or less
1426	Taylor 950	Multiple	50	239	Screen; 4-cycle, 10 hp or less
1427	Teck 1-6250- C	Vertical	259	240	~
1428	Teck SS-860-2	Horizontal	181	240	~
1429	Teck SS-860-2	Vertical	204	240	~
1430	Teck SS-860-25	Horizontal	205	240	~
1431	Teck SS-860-25	Vertical	208	240	~
1432	Teck SS-860-3	Vertical	238	240	~
1433	Teck SS-860-3	Horizontal	245	240	~

*n/d: no diagram; image temporarily unavailable

2002 QUALIFIED AND RATED LIST—GENERAL PURPOSE SPARK ARRESTER

	MANUFACTURER AND MODEL	APPL POS	FLOW	PAGE	REMARKS
1434	Teck SS-860-35	Horizontal	372	240	~
1435	Teck SS-860-35	Vertical	377	240	~
1436	Teck SS-860-4A	Horizontal	383	240	~
1437	Teck SS-860-4A	Vertical	386	240	~
1437	Teck SS-860-5	Vertical	532	240	~
1439	Tecumseh 35352	Multiple	70	241	Screen; 4-cycle, 12 hp or less
1440	Tecumseh 35352	Multiple	54	241	Screen; 4-cycle, 13 hp or smaller
1441	Tecumseh 36085	Multiple	31	241	Screen; 4-cycl, 5 hp or smaller
1442	Tecumseh 36411	Multiple	110	n/d	Screen; 4-cycle, 2.5 hp or smaller
1443	Tecumseh 390301A	Multiple	16	241	Screen; 2-cycle, 2 hp or smaller
1444	Tecumseh 390309	Multiple	42	241	Screen; 2-cycle, 4 hp or smaller
1445	Tecumseh 400B	Multiple	26	241	Screen; 4-cycle, 4 hp or less
1446	Tecumseh 751A	Multiple	26	241	Screen; 4-cycle, 5 hp or smaller
1447	Tillery T-134	Multiple	45	242	Screen; 2-cycle, 6.5 hp or less
1448	Tillery T-234	Multiple	26	242	Screen; 4-cycle, 4 hp or less
1449	Toro 36-4750	Multiple	19	242	Screen; 4-cycle, 2.27 hp or less
1450	Toro 56-6730	Multiple	21	242	Screen; 4-cycle, 3.7 hp or less
1451	Toro 81-0200	Multiple	31	242	Screen; 2-cycle, 3.5 hp or less
1452	Torque TQ 1000	Horizontal	24	243	~
1452	Torque TQ 2000	Horizontal	34	243	~
1454	Torque TQ 3000	Horizontal	43	243	~
1455	Torque TQ 3000A	Horizontal	42	243	~
1456	Torque TQ 3000B	Horizontal	46	243	~
1457	USDA FS-3	Vertical	530	244	Prototype
1458	USDA FS-3	Horizontal	614	244	Prototype
1459	USDA FS-3	Horizontal	622	24	Prototype
1460	USDA FS-4	Horizontal	164	244	Prototype
1461	Wacker WM80-58406	Horizontal	23	n/d	~
1462	Wajax-Pacific PB-1196	Horizontal	69	245	Primer-arrester
1463	Wajax-Pacific PC-1216	Horizontal	56	245	Primer-arrester
1464	Wajax-Pacific Pumper D-4479	Horizontal	57	245	Primer-arrester. Also called Pacific, Pumper or Wajax.
1465	Wajax-Pacific Pumper Model 2	Multiple	103	245	Screen; 2-cycle, 8.5 hp or less. Also called Pacific Pumper or Wajax.
1466					
1467	Walker 21578	Vertical	296	n/d	~

*n/d: no diagram; image temporarily unavailable

2002 QUALIFIED AND RATED LIST—GENERAL PURPOSE SPARK ARRESTER

	MANUFACTURER AND MODEL	APPL POS	FLOW	PAGE	REMARKS
1468	Walker 21578	Horizontal	273	n/d	~
1469	Walker 21579	Horizontal	427	n/d	~
1470	Walker 21579	Vertical	436	n/d	~
1471	Walker 21580	Horizontal	597	n/d	~
1472	Walker 21580	Vertical	644	n/d	~
1473	Walker 21581	Vertical	881	n/d	~
1474	Walker 21581	Horizontal	842	n/d	~
1475	Walker 21582	Vertical	1,200	n/d	~
1476	Walker 21582	Horizontal	1,177	n/d	~
1477	Walker 21584	Vertical	1,630	n/d	~
1478	Walker 21584	Horizontal	1,275	n/d	~
1479	Walker 21585	Inverted	28	n/d	See Nelson T-12825F
1480	Walker 22005	Horizontal	2,020	n/d	~
1481	Walker 22005	Vertical	2,040	n/d	~
1482	Walker 35807	Horizontal	123	n/d	~
1483	Walker 35807	Vertical	124	n/d	~
1484	Washington Iron Works No.3	Vertical	615	246	Discontinued
1485	White Brothers #2001	Multiple	191	n/d	~
1486	White Brothers E-Series #2000	Horizontal	300	n/d	Disc type, closed endcap disc must be in place
1487	Wildfire Pacific 00-12-300EP	Vertical	65.3	n/d	~
1488	Wildfire Pacific 00-12-300EP	Vertical	65	n/d	~
1489	Wintec 500	Horizontal	71	247	~
1490	Xducer See SUPERTRAPP	~	~		See SUPERTRAPP
1491	Xducer ll	Horizontal	155	n/d	Modified Xdusor X-100
1492	Xducer X-100	Horizontal	102	n/d	~
1493	Yamaha 238H	Horizontal	52	n/d	~
1494	Yamaha EG 122	Multiple	38	n/d	~
1495	Yamaha EG 123	Multiple	38	n/d	~
1496	Yamaha EG 124	Multiple	26	n/d	~
1497	Yamaha EG 100A	Horizontal	33	n/d	~
1498	Yamaha EG 100B	Horizontal	26	n/d	~
1499	Yamaha EG 102A	Horizontal	46	n/d	Not qualified for use above rated flow
1500	Yamaha EG 102B	Horizontal	45	n/d	Not qualified for use above rated flow
1501	Yamaha EG 103A	Vertical	27	n/d	~

*n/d: no diagram; image temporarily unavailable

2002 QUALIFIED AND RATED LIST—GENERAL PURPOSE SPARK ARRESTER

	MANUFACTURER AND MODEL	APPL POS	FLOW	PAGE	REMARKS
1502	Yamaha EG 103B	Vertical	27	n/d	~
1503	Yamaha EG 104A	Vertical	22	n/d	Not qualified for use above rated flow
1504	Yamaha EG 104B	Vertical	20	n/d	~
1505	Yamaha EG 105A	Inverted	19	n/d	Not qualified for use above rated flow
1506	Yamaha EG 106	Horizontal	13	248	~
1507	Yamaha EG 107	Horizontal	44	248	~
1508	Yamaha EG 108	Horizontal	29	248	~
1509	Yamaha EG 109	Horizontal	25	248	~
1510	Yamaha EG 110	Inverted	72	248	~
1511	Yamaha EG 111	Horizontal	15	248	~
1512	Yamaha EG 113	Multiple	26	249	Screen; 4-cycle, 5 hp or smaller
1513	Yamaha EG 114	Multiple	54	249	Screen; 4-cycle, 11 hp or smaller
1514	Yamaha EG 114	Multiple	54	249	Screen; 4-cycle, 11 hp or smaller
1515	Yamaha EG 116	Multiple	25	249	Screen; 4-cycle, 5 hp or smaller
1516	Yamaha EG 117 A	Multiple	37	249	Screen; 4-cycle, 6.6 hp or smaller
1517	Yamaha EG 118	Multiple	26	249	Screen type, 4-stroke, 4.5 hp or smaller
1518	Yamaha EG 119	Multiple	26	249	Screen type, 4-stroke, 4.5 hp or smaller
1519	Yamaha EG 120	Multiple	54	250	Screen type
1520	Yamaha EG 122	Multiple	38	n/d	~
1521	Yamaha EG 123	Multiple	38	n/d	~
1522	Yamaha EG 124	Multiple	26	n/d	~
1523	Yamaha LG 101	Multiple	60	250	Screen; 4-cycle, 12 hp or smaller
1524	Yamaha LG 102	Multiple	87	250	Screen; 4-cycle, 18 hp or smaller
1525	Yamaha YHM 167A	Horizontal	35	250	~
1526	Yamaha YHM 167B	Horizontal	31	250	~
1527	Yamaha YHM 167B	Horizontal	31	250	~
1528	Yamaha YHM 200	Horizontal	50	250	~
1529	Yamaha YHM 200A	Horizontal	49	250	~
1530	Yamaha YHM 200B	Horizontal	64	250	~
1531	Yamaha YHM 220	Horizontal	45	251	~
1532	Yamaha YHM 220A	Horizontal	44	251	~
1533	Yamaha YMH 220B	Horizontal	53	251	~
1534	Yamaha YMH 220C	Horizontal	57	251	~
1535	Yamaha YMH 238	Horizontal	64	251	~

*n/d: no diagram; image temporarily unavailable

2002 QUALIFIED AND RATED LIST—GENERAL PURPOSE SPARK ARRESTER

	MANUFACTURER AND MODEL	APPL POS	FLOW	PAGE	REMARKS
1536	Yamaha YMH 238A	Horizontal	63	251	~
1537	Yamaha YMH 238B	Horizontal	41	251	~
1538	Yamaha YMH 238C	Horizontal	41	251	~
1539	Yamaha YMH 238D	Horizontal	54	252	~
1540	Yamaha YMH 238E	Horizontal	72	252	~
1541	Yamaha YMH 238G	Horizontal	63	n/d	~
1542	Yamaha YMH 270	Horizontal	77	252	~
1543	Yamaha YMH 270A	Horizontal	100	n/d	~
1544	Yamaha YMH 270B	Horizontal	100	n/d	~
1545	Yamaha YMS 125	Multiple	62	n/d	Screen type
1546	Yamaha YMS 400	Multiple	150	n/d	Screen type
1547	Yamaha YMS 400A	Multiple	150	252	Screen type
1548	Yamaha YMS 50	Multiple	28	252	Screen; 2-cycle, 5.8 hp or smaller
1549	Yamaha YMS 50A	Multiple	27	252	Screen; 2-cycle, 5.8 hp or smaller
1550	Yamaha YMS660	Multiple	173	n/d	~
1551	Yamaha YMUS-01	Multiple	248	n/d	~
1552	Yamaha YS125	Multiple	62	n/d	~
1553	Yamaha-Krizman KS-250	Horizontal	24	253	~
1554	Yamaha-Krizman KS-250A	Horizontal	20	n/d	~
1555	Yamaha-Krizman KS-350	Horizontal	58	253	~
1556	Yamaha-Krizman KS-350A	Horizontal	54	n/d	~
1557	Yamaha-Krizman KS-350B	Horizontal	32	n/d	~
1558	Yamaha-Krizman KS-350C	Horizontal	23	n/d	~
1559	Yamaha-Krizman KS-375	Horizontal	79	n/d	Modified KS-400
1560	Yamaha-Krizman KS-375A	Horizontal	75	253	~
1561	Yamaha-Krizman KS-375B	Horizontal	55	253	~
1562	Yamaha-Krizman KS-375C	Horizontal	70	253	~
1563	Yamaha-Krizman KS-375D	Horizontal	71	253	~
1564	Yamaha-Krizman KS-375E	Horizontal	63	254	~
1565	Yamaha-Krizman KS-375F	Horizontal	54	254	~
1566	Yamaha-Krizman KS-375G	Horizontal	47	n/d	~
1567	Yamaha-Krizman YS-125	Horizontal	42	254	Discontinued
1568	Yamaha-Krizman YS-250	Horizontal	20	254	Discontinued
1569	Yamaha-Krizman YS-80	Horizontal	24	254	Discontinued

*n/d: no diagram; image temporarily unavailable

2002 QUALIFIED AND RATED LIST—GENERAL PURPOSE SPARK ARRESTER

	MANUFACTURER AND MODEL	APPL POS	FLOW	PAGE	REMARKS
1570	Yamaha-Krizman YSU-80	Horizontal	24	254	Discontinued
1571	Yamaha-Skyway Series 300 Mod 520	Horizontal	89	255	Not qualified for use above rated flow
1572	Yellow Jacket Mfg. Inc. 0412-157	Multiple	167	n/d	Used on 500 cc Suzuki
1573	Yoshimura YRD-1Q	Horizontal	176	256	Fiberglass packing must be in place for the full length of the perforated tube.
1574					
1575	Yoshimura YRD-2L	Horizontal	176	256	Fiberglass packing must be in place for the full
1576	Yuba 8000	Vertical	740	256	~
1577					
1578					
1579					
1580					
1581					
1582					
1583					
1584					
1585					
1586					
1587					
1588					
1589					
1590					
1591					
1592					
1593					
1594					
1595					
1596					
1597					
1598					
1599					
1600					
1601					
1602					
1603					

*n/d: no diagram; image temporarily unavailable

2002 QUALIFIED AND RATED LIST FOOTNOTES—GENERAL PURPOSE SPARK ARRESTER

* = Donaldson Company, Inc., Early models may carry a “-1” at the end of this number.

** = Super Trapp Industries, Units qualify regardless of the number of discs used. The assigned flow rates were obtained using 18 discs. Fewer discs will give a lower flow rate and more discs will give a higher flow rate. Nest discs so dimples interlock and tighten retainer bolt so discs are not loose. Frequent cleaning may be necessary to avoid plugging.

Note: Hapco models were formerly labeled Harco. Model designations may contain a dash followed by number(s) and letters. These signify the inlet size opening, application, and/or thread type. Moderate inlet size differences are acceptable from the dimensions indicated on the drawings for identification in the next section.

A DESCRIPTION OF THE TERMS USED IN THE GENERAL PURPOSE SPARK ARRESTER 2002 QUALIFIED AND RATED LIST FOLLOWS:

Manufacturer	Manufacturer of the spark arrester.
Model	Assigned approved arrester model number, not to be confused with the manufacturer's stock number.
Appl Pos	Only qualified position of application.
Flow	Rated flow of the arrester in cubic feet per minute (cfm).
Remarks	Additional information needed to identify the arrester.
Screen	Screen with openings of 0.023-inch or smaller, should be present if indicated.
Cycle	Number of engine stroke cyles; ie. four cycle engine.

CHART I EXHAUST FLOW IN CUBIC FEET PER MINUTE AT MAXIMUM RATINGS[1] FOR 4-CYCLE DIESEL ENGINES[2]

Engine Displacement		Revolutions Per Minute												
cubic cm.	cubic inches	800	1000	1200	1400	1600	1800	2000	2200	2400	2600	2800	3000	RPM[3] Differential
16	1	0	1	1	1	1	1	1	1	1	1	2	2	0
33	2	1	1	1	2	2	2	2	2	3	3	3	3	0
49	3	1	2	2	2	3	3	3	4	4	4	5	5	0
66	4	2	2	3	3	4	4	4	5	5	6	6	7	0
82	5	2	3	3	4	4	5	6	6	7	7	8	8	1
94	6	3	3	4	5	5	6	7	7	8	9	9	10	1
115	7	3	4	5	5	6	7	8	9	9	10	11	12	1
131	8	4	4	5	6	7	8	9	10	11	12	13	13	1
148	9	4	5	6	7	8	9	10	11	12	13	14	15	1
164	10	4	6	7	8	9	10	11	12	13	15	16	17	1
328	20	9	11	13	16	18	20	22	25	27	29	31	34	2
492	30	13	17	20	24	27	30	34	37	40	44	47	51	3
656	40	18	22	27	31	36	40	45	49	54	58	63	67	4
820	50	22	28	34	39	45	51	56	62	67	73	79	84	6
984	60	27	34	40	47	54	61	67	74	81	88	94	101	7
1,148	70	31	39	47	55	63	71	79	87	94	102	110	118	8
1,312	80	36	45	54	63	72	81	90	99	108	117	126	135	9
1,475	90	40	51	61	71	81	91	101	111	121	131	142	152	10
1,639	100	45	56	67	79	90	101	112	124	135	146	157	169	11
3,279	200	90	112	135	157	180	202	225	247	270	292	314	337	22
4,918	300	135	168	202	236	270	303	337	371	404	438	472	506	34
6,557	400	180	225	270	315	360	404	449	494	539	584	629	674	45
8,197	500	224	281	337	393	449	505	562	618	674	732	786	843	56
9,836	600	269	337	405	472	539	606	674	742	809	876	944	1,011	67
11,475	700	314	393	472	550	629	708	786	865	944	1,023	1,101	1,180	79
13,115	800	359	449	540	629	719	809	899	989	1,079	1,169	1,258	1,348	90
14,754	900	404	506	607	708	809	910	1,011	1,113	1,213	1,315	1,415	1,517	101
16,393	1,000	449	562	674	786	899	1,011	1,124	1,236	1,348	1,461	1,573	1,685	112

[1]Volumetric efficiency 80%; exhaust temperatures 900°F.

[2]For 2-cycle engines, multiply value by 2; for 2-cycle supercharged engines, multiply value by 3.25; for 4-cycle supercharged engines, multiply value by 1.25.

[3]The "RPM Differential" column gives the difference between RPM columns for interpolation purposes. Entries are to the nearest whole number.

General— All chart values are proportional, so a flow can be calculated for a 1000-cubic-inch engine by doubling the flow figure for an identical engine but with 500-cubic-inch displacement. The same rule applies to revolutions per minute. Therefore, a flow can be calculated for a 3000 maximum rpm engine by doubling the flow value of an identical engine but with 1500 maximum rpm.

This chart may also be used like an interest table. If the engine has a cubic inch displacement of 438 at 2600 revolutions per minute select readings from 400, 30, and 8 at 2600 rpm. The sum of these is the flow rate. When revolutions per minute fall between columns, ie., 1600 to 1800. 1800 to 2000, etc., take the next highest rpm column. To be more exact interpolate by using the "RPM Differential" value.

EXAMPLE: A 4-cycle diesel engine has a total displacement of 633 cubic inches. If its maximum rpm is 2600, what is the maximum exhaust flow?

Solution— 600 cu. in. displacement @ 2600 rpm=876; 30=44; and 3=4; Sum=924 cfm.

CHART II EXHAUST FLOW IN CUBIC FEET PER MINUTE AT MAXIMUM RATINGS[1] FOR 4-CYCLE GASOLINE OR PROPANE NATURALLY ASPIRATED ENGINES[2]

Engine Displacement		Revolutions Per Minute											
cubic cm.	cubic inches	1600	1800	2000	2200	2400	2600	2800	3000	3200	3400	3600	RPM[3] Differential
16	1	1	1	1	2	2	2	2	2	2	2	2	0
33	2	2	2	3	3	3	4	4	4	4	5	5	0
49	3	3	4	4	5	5	5	6	6	7	7	7	0
66	4	4	5	5	6	7	7	8	8	9	10	11	1
82	5	5	6	7	8	8	9	10	10	11	12	12	1
94	6	7	7	8	9	10	11	12	12	13	14	15	1
115	7	8	9	10	11	12	12	13	14	15	16	17	1
131	8	9	10	11	12	13	14	15	16	18	19	20	1
148	9	10	11	12	14	15	16	17	18	20	21	22	1
164	10	11	12	14	15	16	18	19	21	22	23	25	1
328	20	22	25	28	30	33	36	38	41	44	47	49	3
492	30	33	37	41	45	49	54	58	62	66	70	74	4
656	40	44	49	55	60	66	71	77	82	88	93	99	6
820	50	55	62	69	75	82	89	96	103	110	117	123	7
984	60	66	74	82	90	99	107	115	123	132	140	148	8
1,148	70	77	86	96	106	115	125	134	144	153	163	173	10
1,312	80	88	99	110	121	132	143	153	164	175	186	197	11
1,475	90	99	111	123	136	148	160	173	185	197	210	222	12
1,639	100	110	123	137	151	164	178	192	206	219	233	247	14
3,279	200	219	247	275	301	329	356	383	411	438	466	493	27
4,918	300	329	370	411	452	493	536	575	617	658	699	740	41
6,557	400	438	493	548	603	658	712	767	822	877	931	986	55
8,197	500	548	617	685	754	822	891	959	1,028	1,096	1,165	1,233	69
9,836	600	658	740	822	904	986	1,068	1,151	1,233	1,315	1,397	1,479	82
11,475	700	767	863	959	1,055	1,151	1,247	1,343	1,439	1,534	1,630	1,726	96
13,115	800	877	986	1,096	1,205	1,315	1,425	1,534	1,644	1,753	1,863	1,973	110
14,754	900	986	1,110	1,233	1,356	1,480	1,603	1,726	1,850	1,973	2,096	2,219	123
16,393	1,000	1,096	1,233	1,370	1,507	1,644	1,781	1,918	2,055	2,192	2,329	2,466	137

[1]Volumetric efficiency 80%; exhaust temperatures 1200°F.

[2]For 2-cycle engines, multiply value by 2 and for 4-cycle supercharged engines, multiply value by 1.25.

[3]The "RPM Differential" column gives the difference between RPM columns for interpolation purposes. Entries are to the nearest whole number.

General— All chart values are proportional, so a flow can be calculated for a 1000-cubic-inch engine by doubling the flow figure for an identical engine but with 500-cubic-inch displacement. The same rule applies to revolutions per minute. Therefore, a flow can be calculated for a 3600 maximum rpm engine by doubling the flow value of an identical engine but with 1800 maximum rpm.

This chart may also be used like an interest table. If the engine has a cubic inch displacement of 438 at 2600 revolutions per minute select readings from 400, 30, and 8 at 2600 rpm. The sum of these is the flow rate. When revolutions per minute fall between columns, ie., 1600 to 1800. 1800 to 2000, etc., take the next highest rpm column. To be more exact interpolate by using the "RPM Differential" value.

EXAMPLE: A 4-cycle gasoline engine has a total displacement of 133 cubic inches. If its maximum rpm is 3200, what is the maximum exhaust flow?

Solution— 100 cu. in. displacement @ 3200 rpm=219; 30=66; and 3=7; Sum=292 cfm.

CHART III EXHAUST FLOW IN CUBIC FEET PER MINUTE AT MAXIMUM RATINGS[1] FOR 4-CYCLE GASOLINE OR PROPANE NATURALLY ASPIRATED ENGINES[2] SUCH AS MOTORCYCLES, TRAIL BIKES, AND SMALL ENGINES ENGINE DISPLACEMENT IN CUBIC CENTIMETERS; RPM 3,400 TO 14,000 INCLUDED

Engine Displacement		Revolutions Per Minute											
cubic cm	cubic inches	3400	3600	3800	4000	5000	6000	7000	8000	9000	10000	12000	14000
1	.061	0	0	0	0	0	0	0	0	0	0	1	1
2	.122	0	0	0	0	0	1	1	1	1	1	1	1
3	.183	0	0	0	1	1	1	1	1	1	1	2	2
4	.244	1	1	1	1	1	1	1	1	2	2	2	2
5	.305	1	1	1	1	1	1	1	2	2	2	3	3
6	.366	1	1	1	1	1	2	2	2	2	3	3	4
7	.427	1	1	1	1	1	2	2	2	3	3	4	4
8	.488	1	1	1	1	2	2	2	3	3	3	4	5
9	.549	1	1	1	2	2	2	3	3	3	4	5	5
10	.610	1	2	2	2	2	3	3	3	4	4	5	6
16.1	1.00	2	2	3	3	3	4	5	5	6	7	8	9
20	1.22	3	3	3	3	4	5	6	7	8	8	10	12
30	1.83	4	5	5	5	6	8	9	10	11	13	15	18
40	2.44	6	6	6	7	8	10	12	13	15	17	20	23
50	3.05	7	8	8	8	11	13	15	17	19	21	25	30
60	3.66	9	9	10	10	13	15	18	20	23	25	30	35
70	4.27	10	11	11	12	15	18	20	24	26	29	35	41
80	4.88	11	12	13	13	17	20	23	27	30	34	40	47
90	5.49	13	14	14	15	19	23	26	30	34	38	45	53
100	6.10	14	15	16	17	21	25	29	33	38	42	50	59
163.9	10.00	23	25	26	27	34	41	48	54	61	68	82	95
200	12.20	29	30	32	33	42	50	59	67	75	84	101	117
300	18.31	43	45	48	50	63	75	89	100	113	126	151	176
400	24.41	57	61	64	67	84	101	117	134	150	168	201	234
500	30.51	71	76	80	84	105	126	146	167	188	210	251	293
600	36.61	86	91	96	100	126	151	176	201	225	252	302	351
700	42.71	100	106	112	117	147	176	205	234	263	294	352	410
800	48.82	114	121	128	134	168	201	234	267	301	336	402	469
900	54.92	128	136	144	150	189	226	264	301	339	378	453	527
1,000	61.02	143	151	161	167	210	251	293	334	376	420	503	596
1,639	100.00	232	247	261	272	342	410	477	545	612	685	820	955

[1]Volumetric efficiency 80%; exhaust temperatures 1200°F.

[2]For 2-cycle engines, multiply value by 2.

General. —All chart values are proportional, so a flow can be calculated for a 1000-cubic-inch engine by doubling the flow figure for an identical engine but with 500-cubic-inch displacement. The same rule applies to revolutions per minute. Therefore, a flow can be calculated for a 3000 maximum rpm engine by doubling the flow value of an identical engine but with 1500 maximum rpm.

The chart may also be used like an interest table. If a 2-cycle motorcycle has a cubic centimeter displacement of 125 at 7500 revolutions per minute, select readings from 100, 20, and 5 in the 8000 rpm column. The sum of these is the flow rate for a 4-cycle engine. When revoltions per minute fall between columns, ie., 7000 to 8000, etc., take the next highest column. To be more exact, interpolate. For the 2-cycle engine, multiply the chart value by two.

NOTES

GENERAL PURPOSE

AND

GENERAL PURPOSE

SCREEN-TYPE

SPARK ARRESTERS

Note: Please refer to the General Purpose Spark Arrester Qualification and Rating Table at the end of this section for a complete and accurate rating of a specific exhaust system model, since a diagram or lack of diagram doesn't necessarily mean pass or fail, respectively.

ACERBIS, ADVANCED CAR SPECIALTIES

ACERBIS

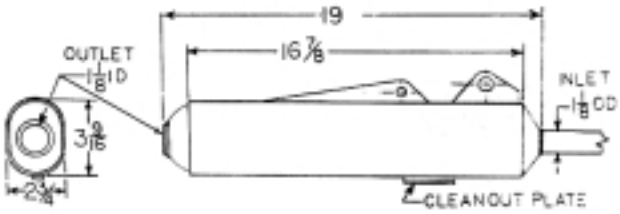

035 MFS-2

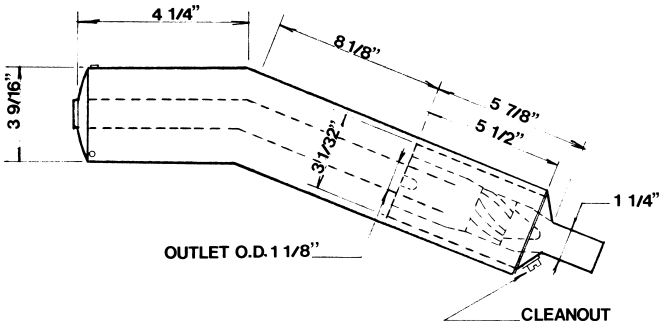

035 MFS-5

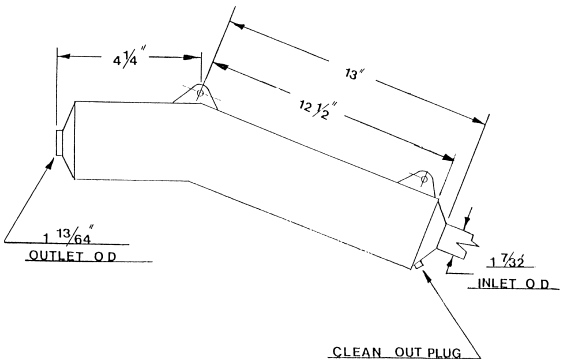

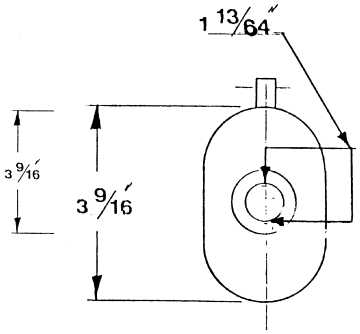

035 MFS-6

ADVANCED CAR SPECIALTIES

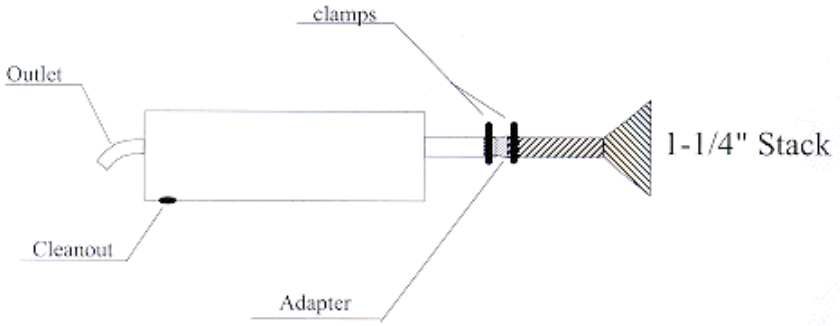

ACS–DI–508–183–05

AIR-MAZE

AIR-MAZE

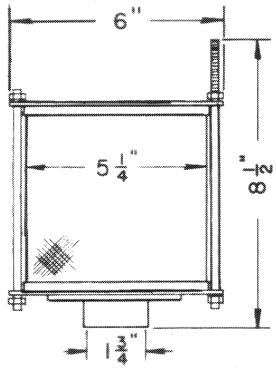

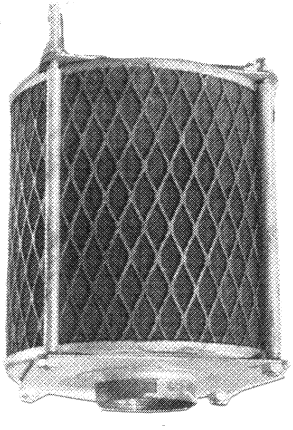

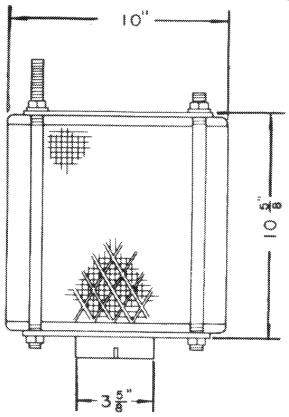

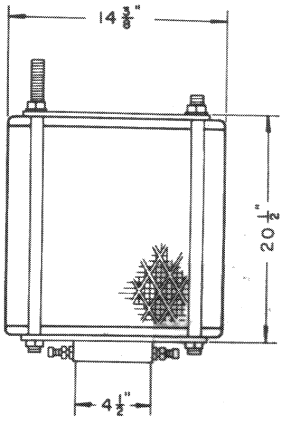

4-FA* **10-FA*** **10-FA*** **146-FA***

* The model designation indicates a minimum and maximum inlet size. Several inlet sizes are available.

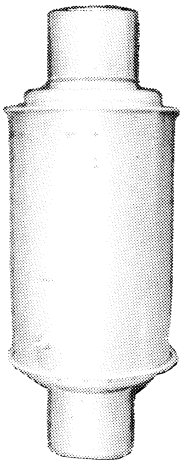

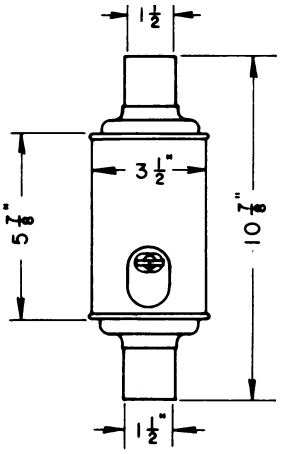

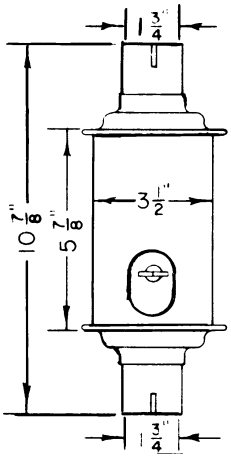

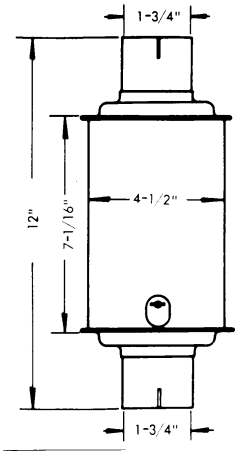

C19035 **C19035-3** **C19035-4** **C19035-5**

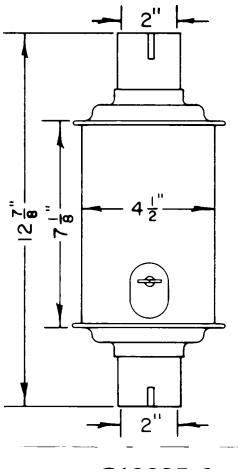

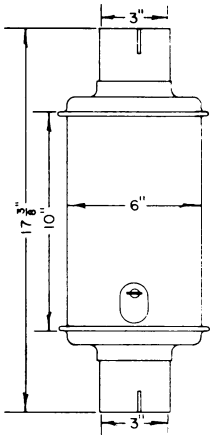

Model C19035-7 has 2-1/2" inlet and outlet dimensions identical.

Model C19035- has 3-1/2" inlet and outlet dimensions.

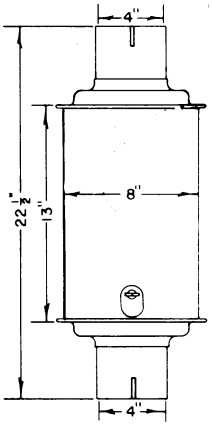

C19035-6 **C19035-7 & 8** **C19035-9 & 10**

AN KRIZMAN/ANSWER PRODUCTS/ANSWER, J&R

AN KRIZMAN

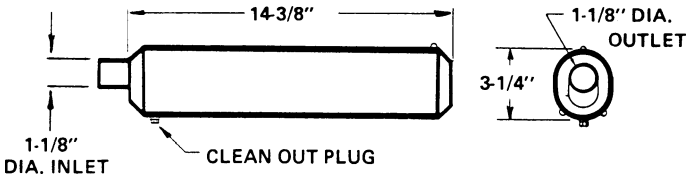

KS 650-O

ANSWER PRODUCTS

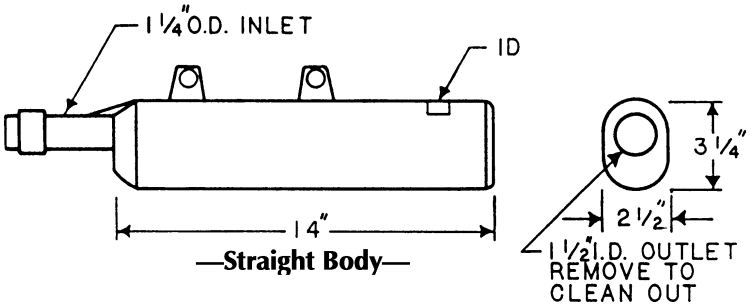

AP-650-M

ANSWER, J&R

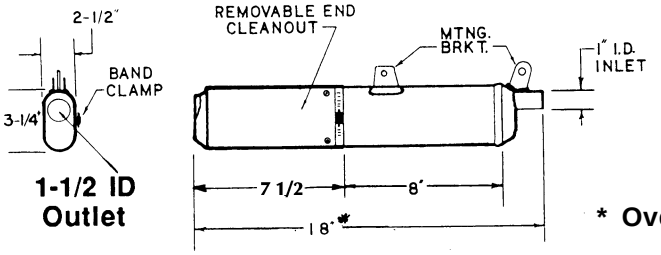

*** Overall length may vary.**

AP 650-C

For Answer, J&R; AP-500D See Husqvarna-Krizman KS-500D
For Answer, J&R; AP-650 See J&R Krizman KS-650
For Answer, J&R; AP-650A See J&R Krizman KS-650A
For Answer, J&R; AP-650C Approved as J&R Krizman KS-650C in an oval muffler
For Answer, J&R; AP-650-0 See J&R Krizman KS-650-0
For Answer, J&R; SA-PRO2 See J&R Krizman KS-650-0

NOTE: The removable end cleanout must be held in place by the band clamp. Welding the removable end cleanout in place is not permitted.

ANSWER, J&R/A.P. PARTS/BBR

ANSWER, J&R

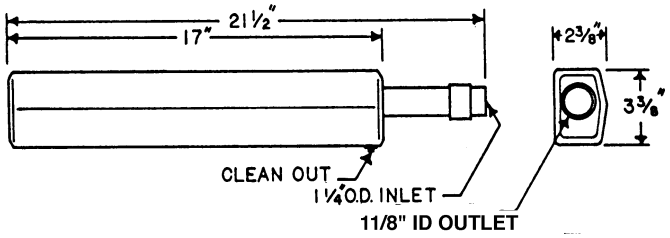

AP-650-D

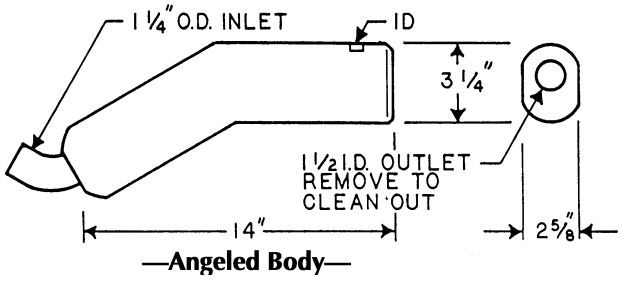

AP-650-M

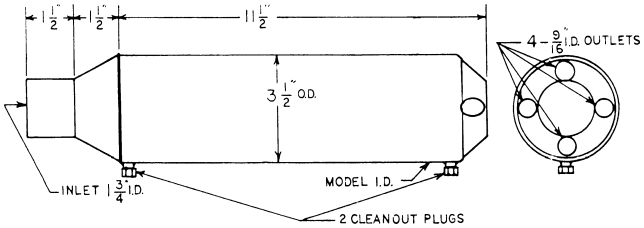

AP-650-4

A.P. PARTS X

For A.P. Parts	83931893	see Donaldson FCM06-0037
	83931908	see Donaldson FCM06-5030
	83931910	see Donaldson FCM07-0068
	83931921	see Donaldson FCM07-0069
	83931933	see Donaldson FCM08-0024
	83933880	see Donaldson FCM09-0091
	83933892	see Donaldson FCM10-0016

BBR MOTORSPORTS

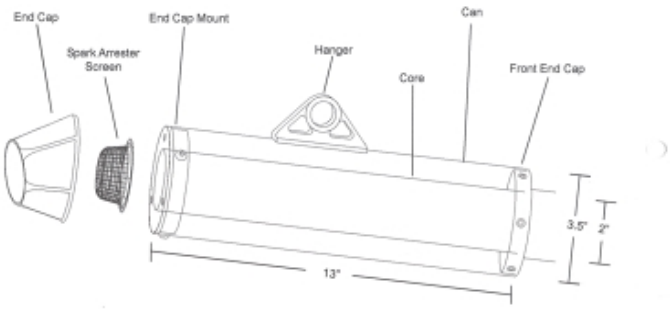

BBR-340-SA

BERKELY/BIG GUN/ BOMBARDIER/BOMBARDIER-KRIZMAN

BERKELEY

For Berkeley F70-01MC—see CEDCO No. 1
For Berkeley F70-02MC—see CEDCO No. 2

BIG GUN

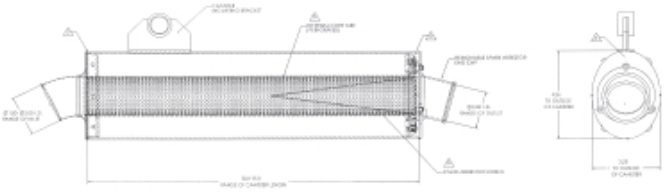

BG2001-BG2002—same as BigGun WB–2001

BOMBARDIER/BOMBARDIER KRIZMAN

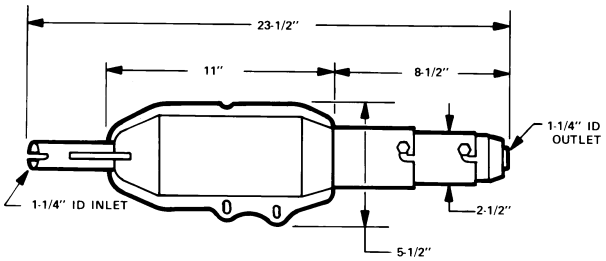

1980

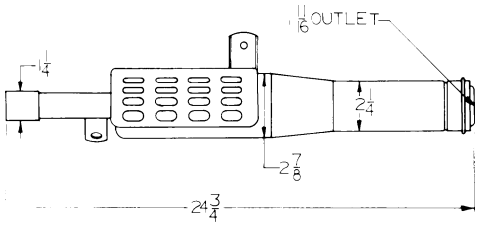

CA-950

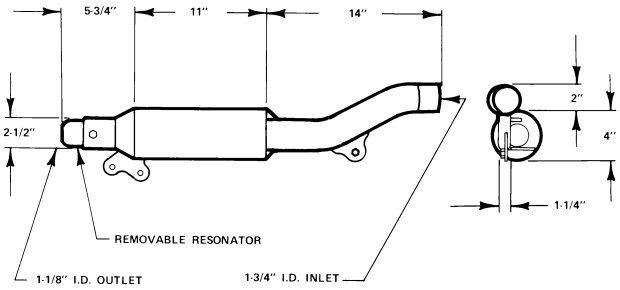

CA-952

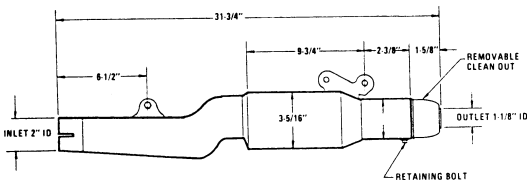

BOMBARDIER LIMITEE CA-952-1

BOMBARDIER-KRIZMAN/BRIGGS–STRATTON

BOMBARDIER-KRIZMAN *(continued)*

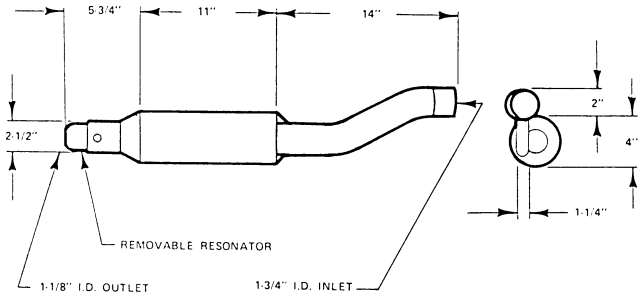

CA-953

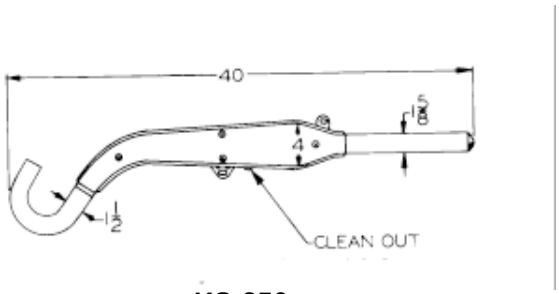

KS-250

B0707600066

No diagrams available for the following:
BOMBARDIER18300152
Refer to General Purpose Qualification Table at end of section for rating.

BRIGGS & STRATTON

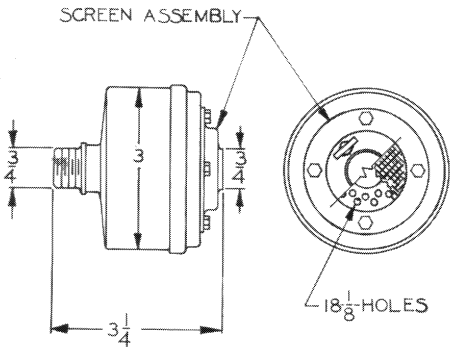

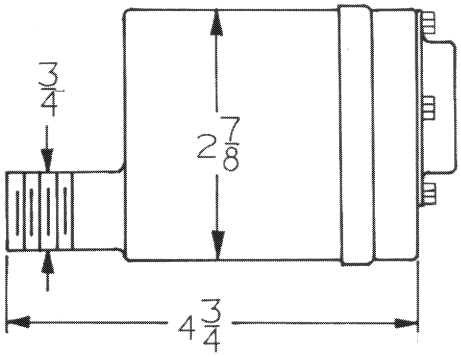

391911 or 391912

BRIGGS & STRATTON *(continued)*

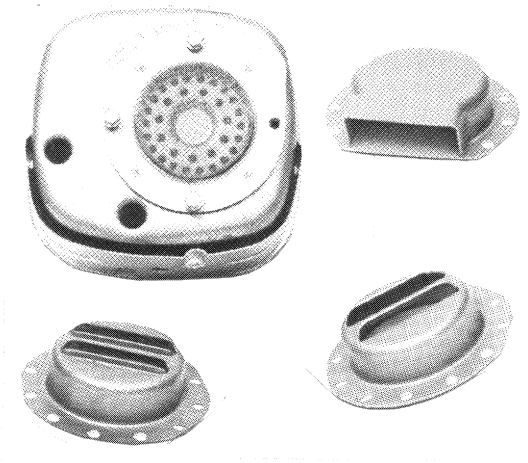

391913

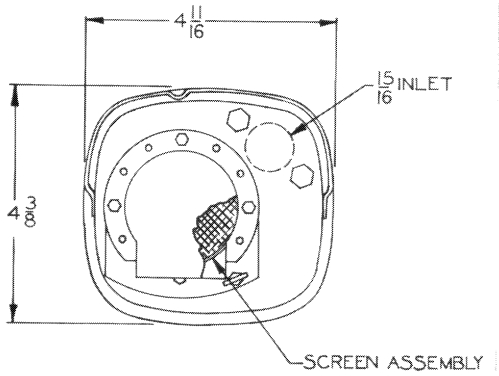

391913 or 393010

For Briggs & Stratton 391915 see Nelson T-14106

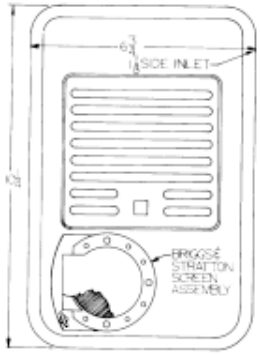

36742
Screen Assembly 392154

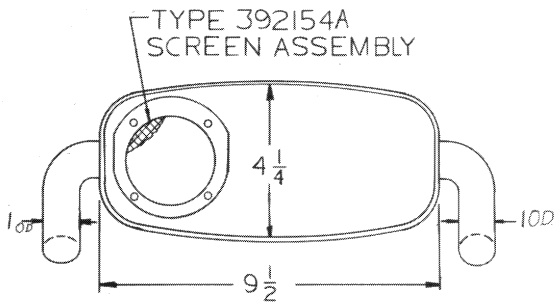

392154A

Spark arrester screen for use on Briggs & Stratton muffler numbers 392999 and 393281.

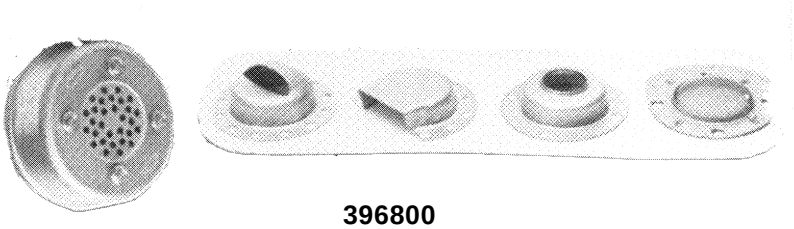

396800

Briggs & Stratton model 392154 screen assembly on 392989 muffler body—note screen assembly 392154 and 392154A are interchangable. See drawing 391911 or 391912 on page 68.

BRIGGS & STRATTON/BURGESS-MANNING

BRIGGS & STRATTON *(continued)*

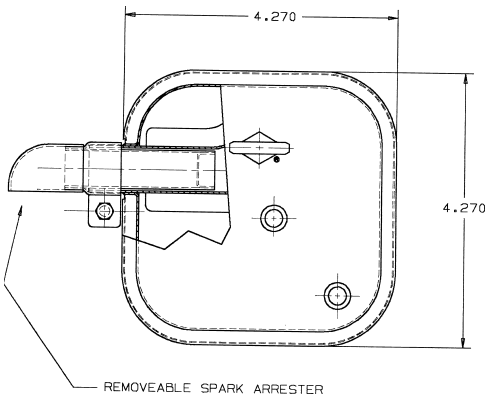

494486

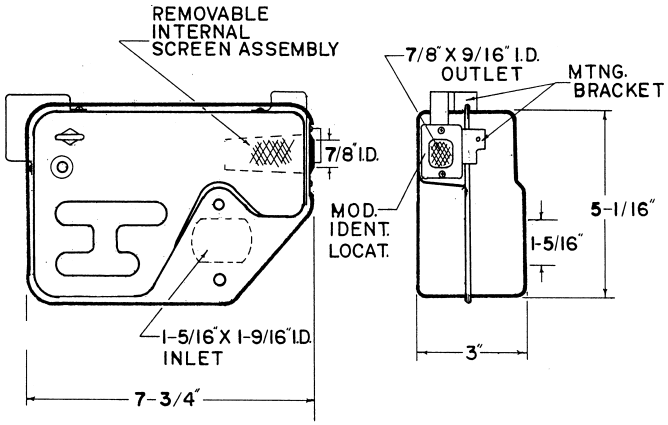

802502

BURGESS-MANNING

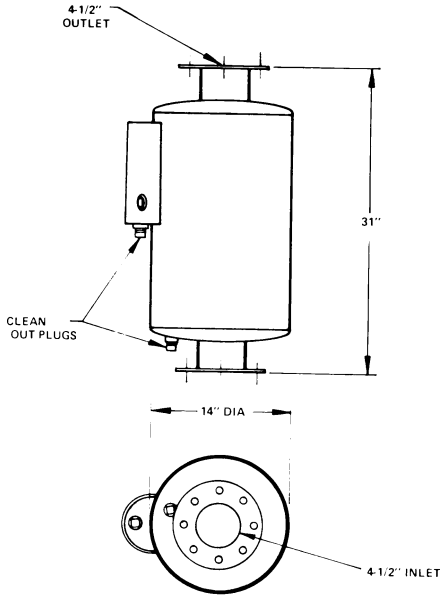

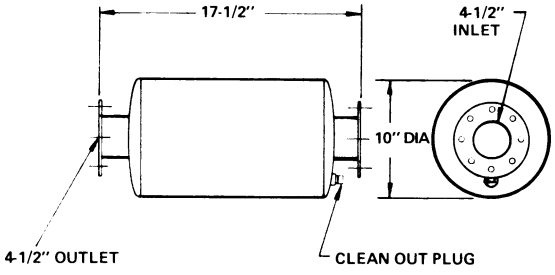

SAT-4

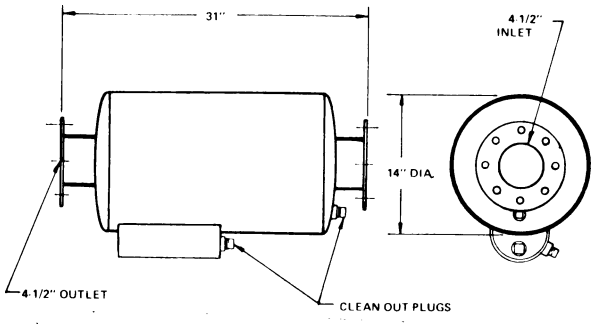

SDMC-4

CAL-TUBE/CATERPILLAR/CEDCO

CAL-TUBE

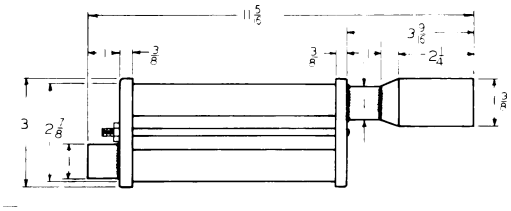

12853

CATERPILLAR

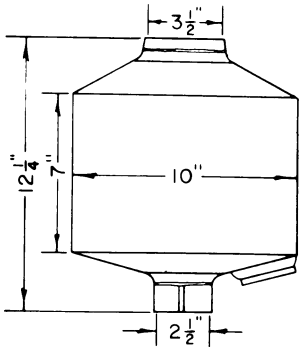

3B5498

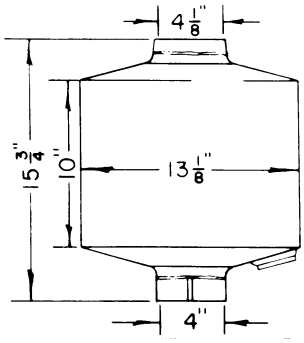

3B7964

For Caterpillar 3B7941**–See Donaldson** FCM07-0068
For Caterpillar 8N70741**–See Donaldson** FMM12-0303

CEDCO

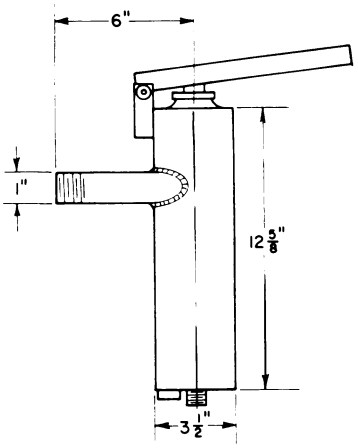

NO. 1

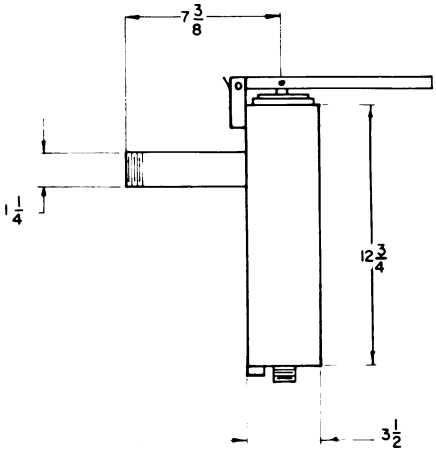

NO. 2

CLARK/CONE

CLARK

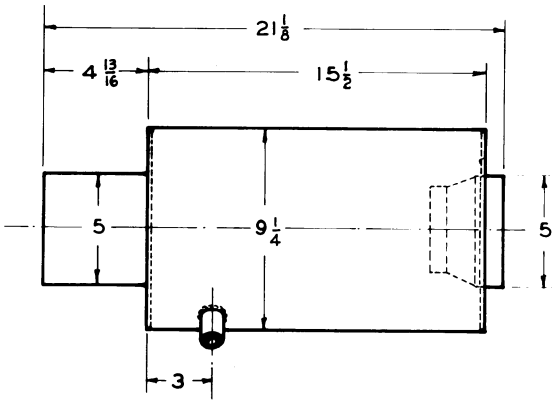

CAC 2000

Clark Equipment company—Melrose Division
For Clark 6547049—see Nelson T-13473
For Clark 6551409—see Nelson T-14415
For Clark 6552340—see Nelson T-14907

CONE

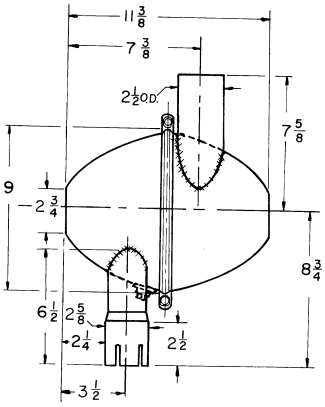

8-D

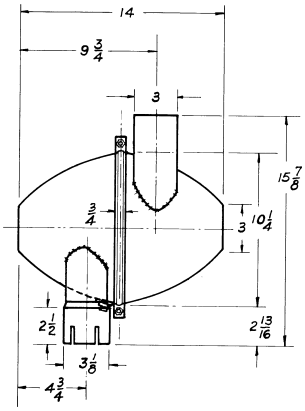

10-D

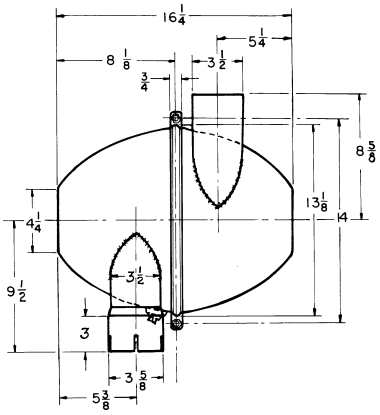

12-D

No diagrams available for the following:
CO1500
CO390
Refer to General Purpose Qualification Table at end of section for rating.

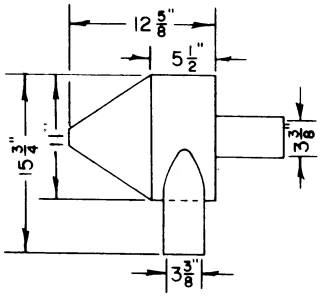

1100
Pulverization type spark arrester

390 and 1500 drawings not available

Known dimensions 390
Inlet pipe diam. 3"
Outlet pipe diam. 3"
Main body diam. 9"

Known dimensions 1500
Inlet pipe diam. 4"
Outlet pipe diam. 4"
Main body diam. 15"

COOP

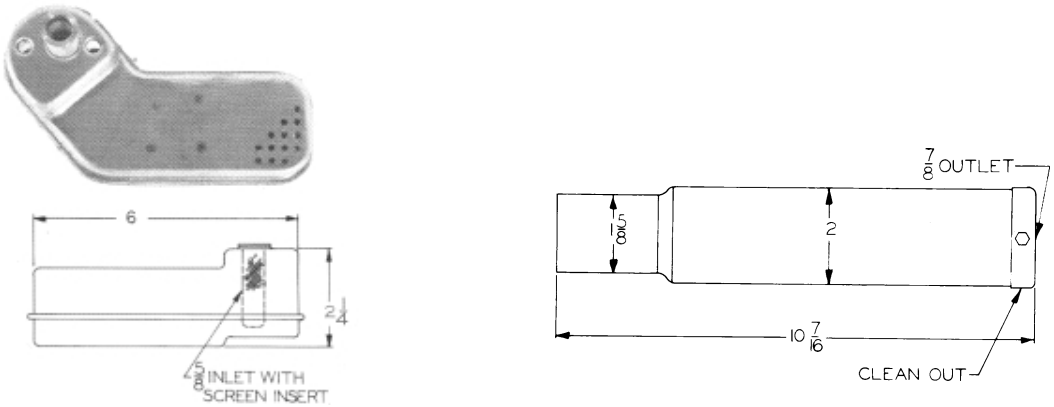

400A

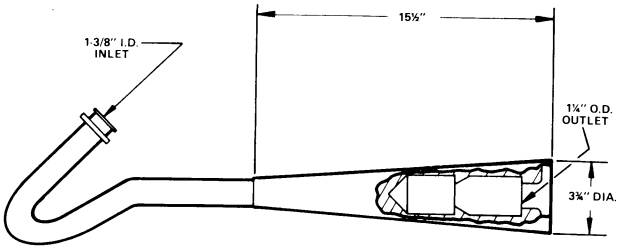

COOP 500A for LT 125

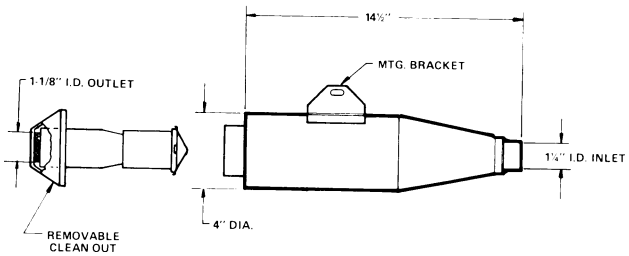

500B

CYCLE GEAR/DAVIS/DISCOJET

CYCLE GEAR

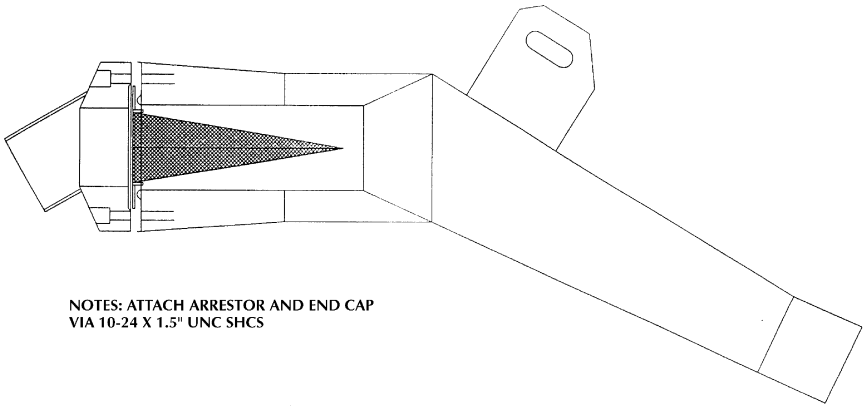

CYCLE GEAR #1

DAVIS

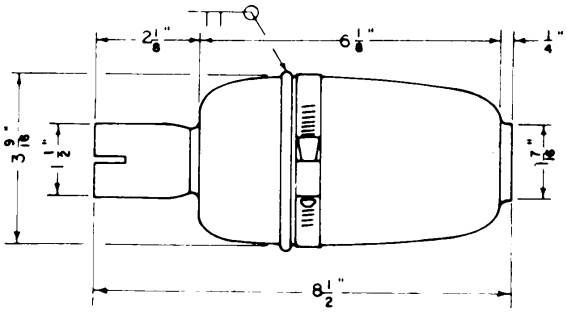

D-L 260

DISCOJET

No diagrams available:
Refer to General Purpose Qualification Table at end of section for rating.
See SuperTrapp

DMC/DOMESTIC/DONALDSON

DMC

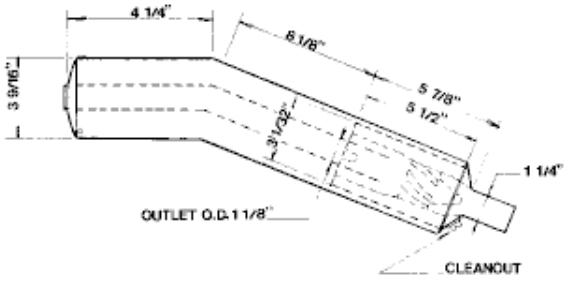

DMC2-K

No diagrams available for the following:
DMC-K
Refer to General Purpose Qualification Table at end of section for rating.

DOMESTIC

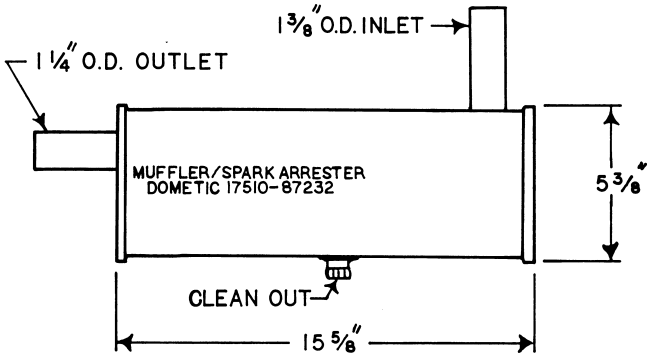

17510-87232

DONALDSON

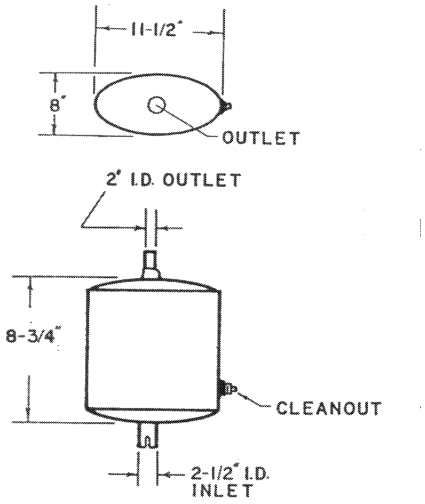

A184241

DONALDSON *(continued)*

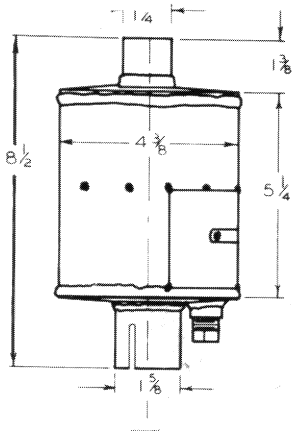

FCM04-5123

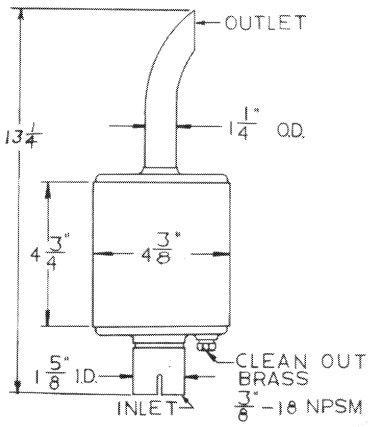

FCM04-5214

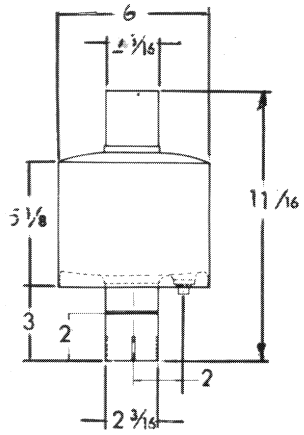

FCM06-0037

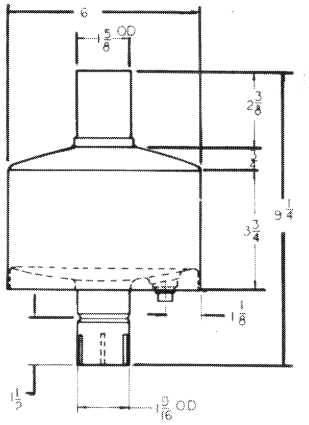

FCM06-0038

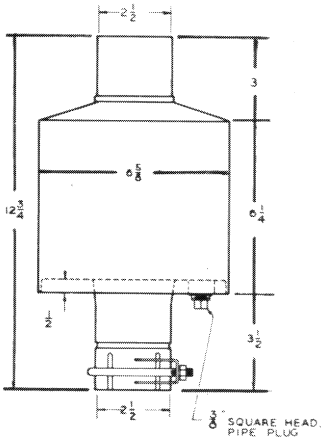

FCM06-5030

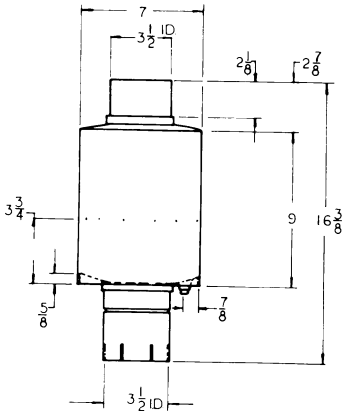

FCM07-0069

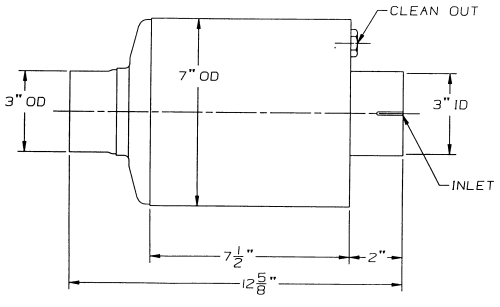

FCM07-0304

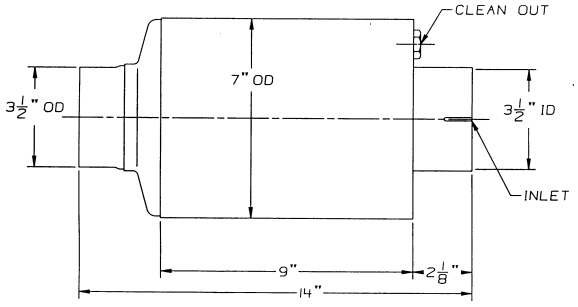

FCM07-0305

DONALDSON *(continued)*

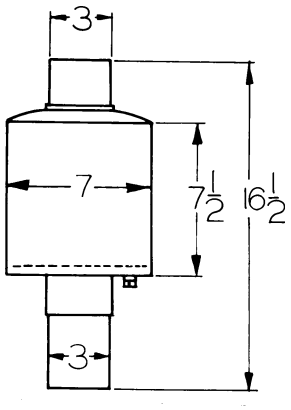

FCM07-0118

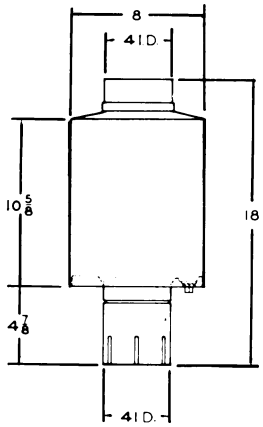

FCM08-0024

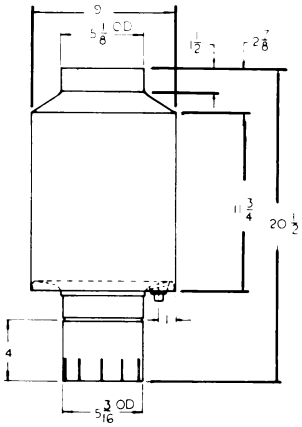

FCM09-0091

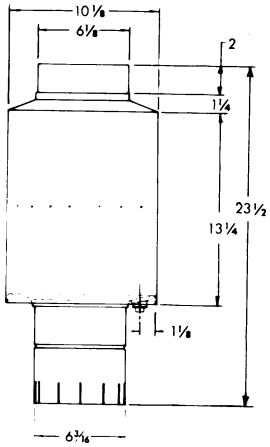

FCM10-0016

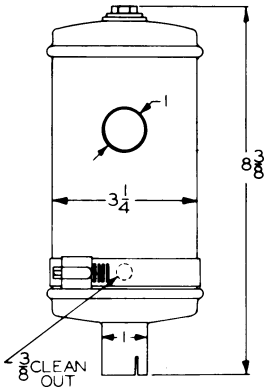

FMM03-2515

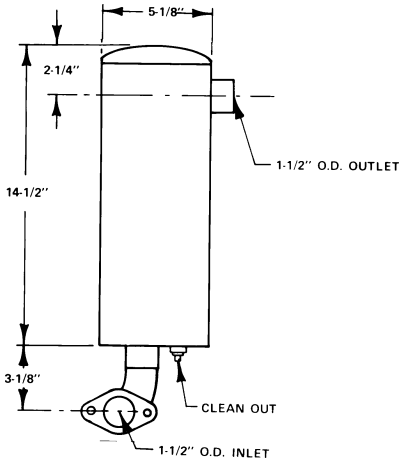

FMM05-0073

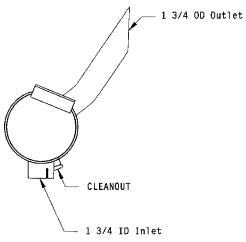

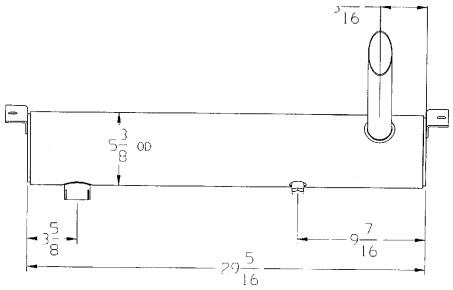

FMM05-0132

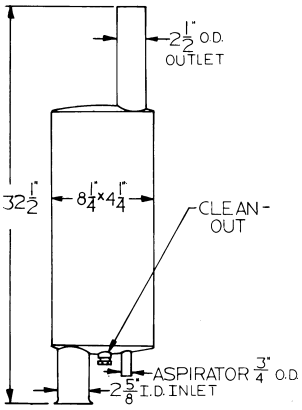

FMM06-0175

DONALDSON *(continued)*

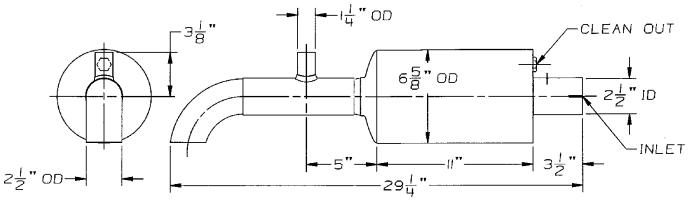

FMM06-5106

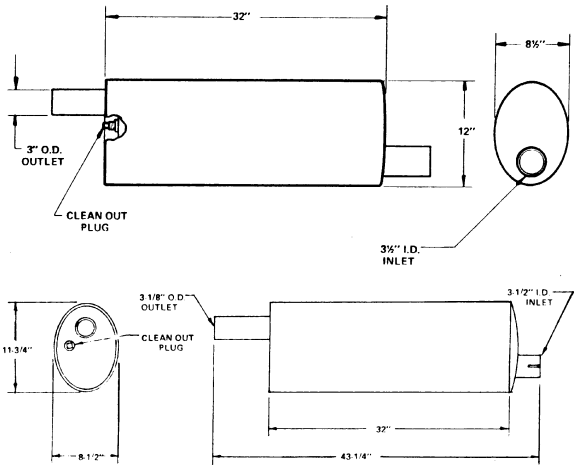

FMM09-0510

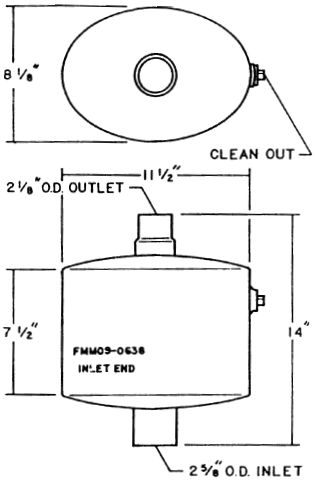

FMM09-0638

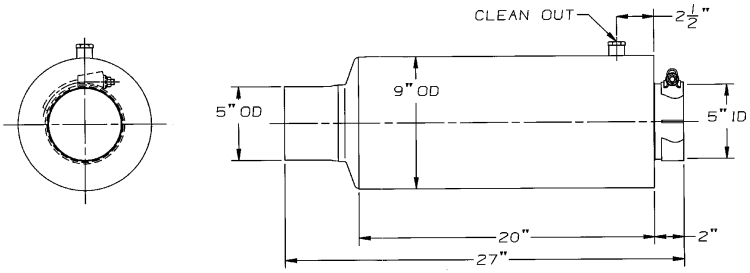

FMM09-0843

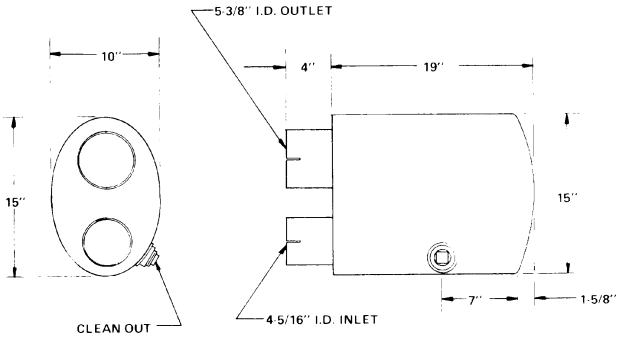

FMM12-0303
(CAT. 8N7074-1)

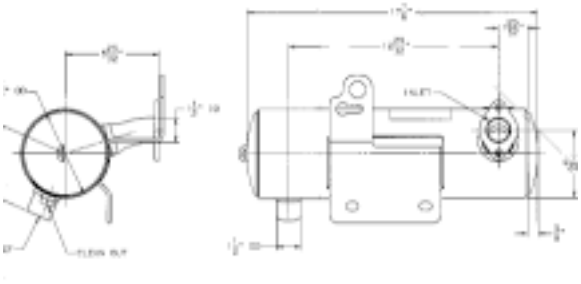

M050242

DONALDSON *(continued)*

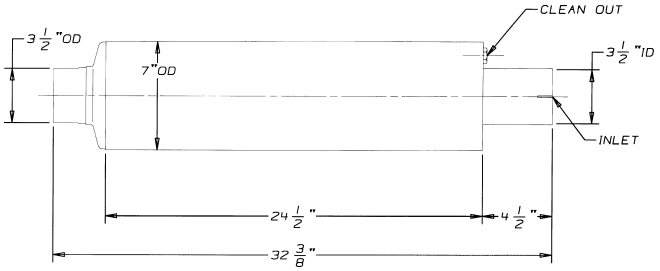

M-07-0285

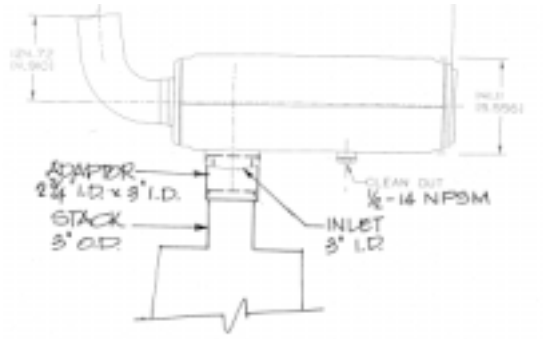

M070378

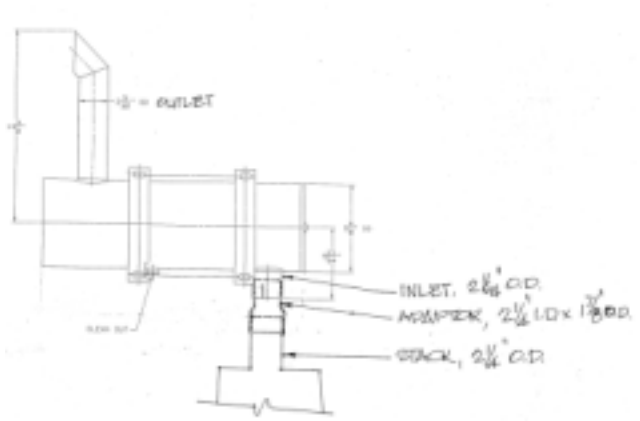

1428811

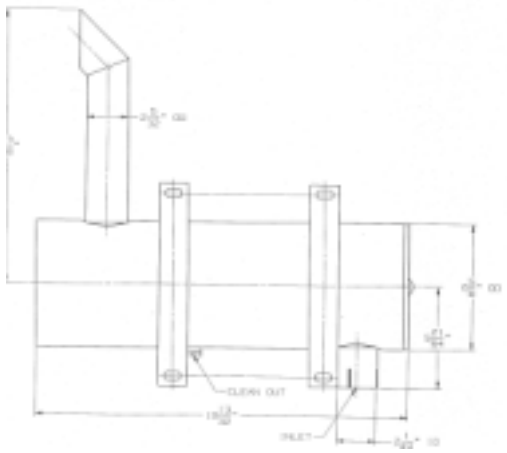

1428845

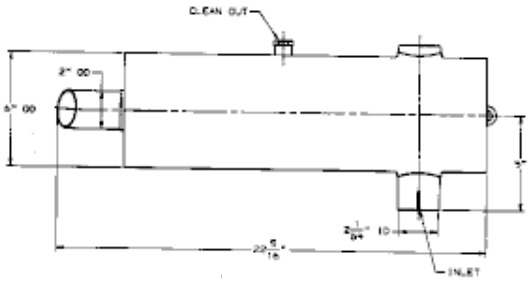

1723507

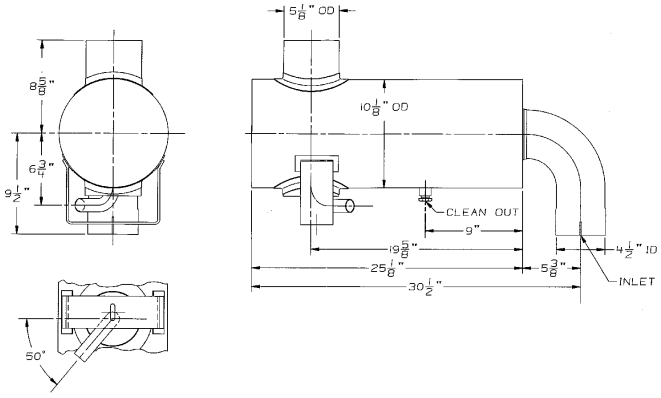

181590A1

DONALDSON *(continued)*

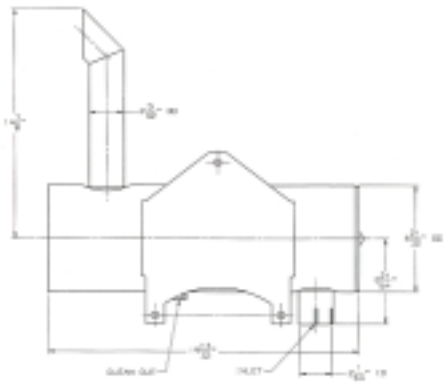

1922614

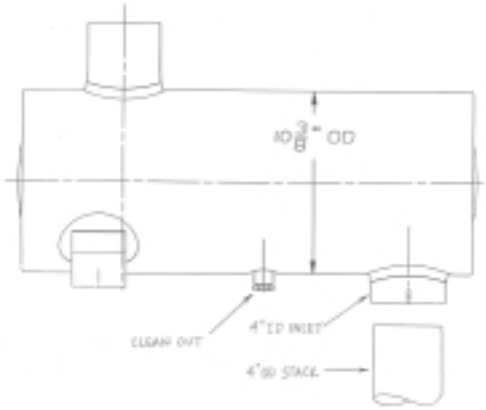

197297A1

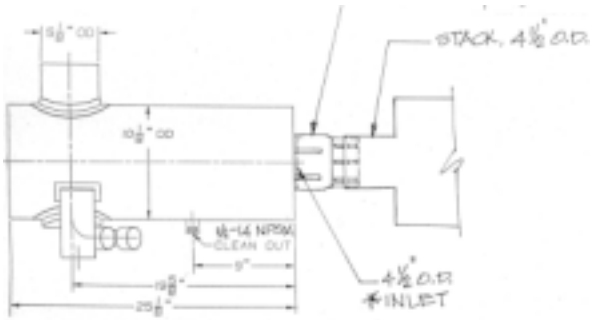

280811A1

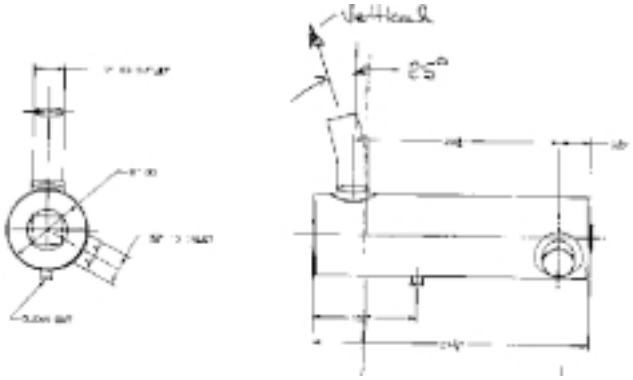

373393A1

403438A1

ECHO/EES

ECHO

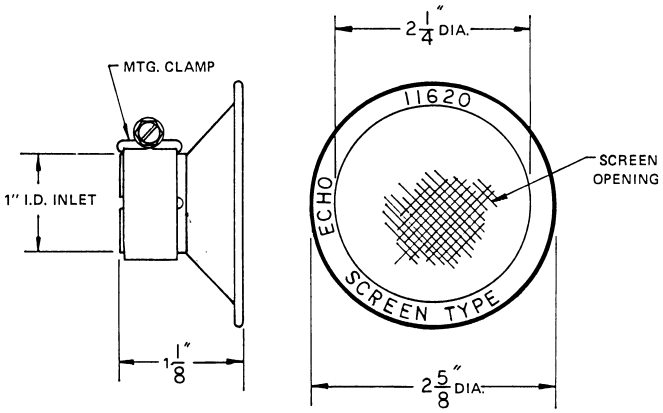

ECHO 11620

EES

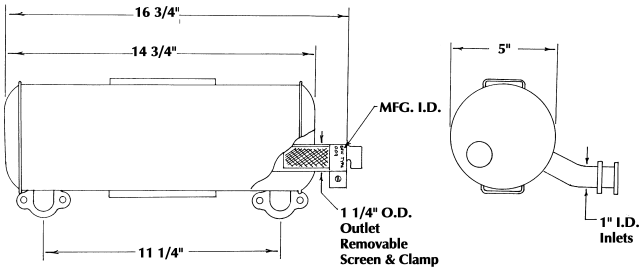

EES 16009

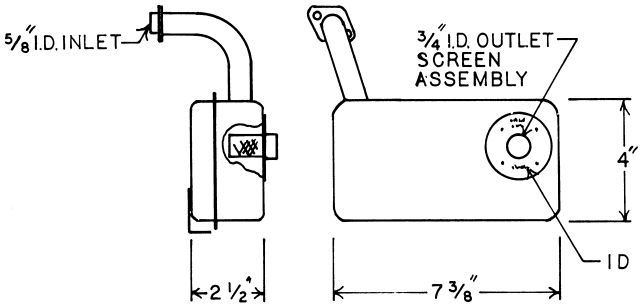

EES 89011-9

No diagrams available for the following:
EES 56378
Refer to General Purpose Qualification Table at end of section for rating.

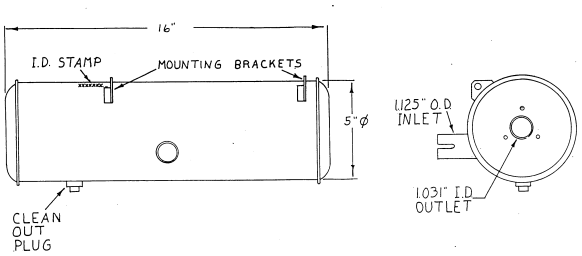

EES 92675

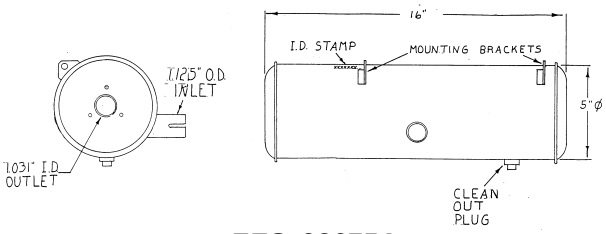

EES 92675A

FARR ASPIRATOR

FARR ASPIRATOR

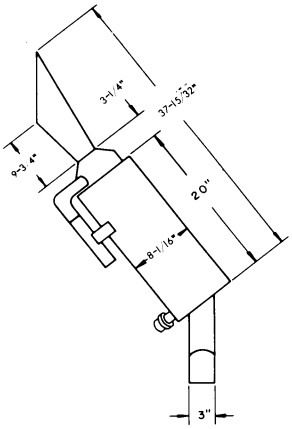

B16647-1

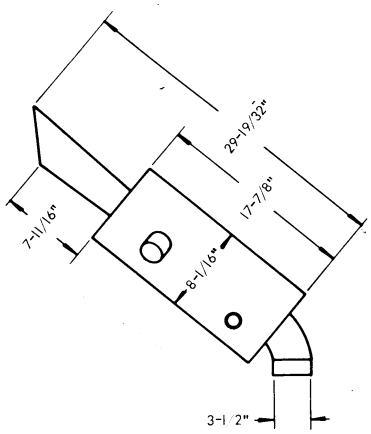

B17345

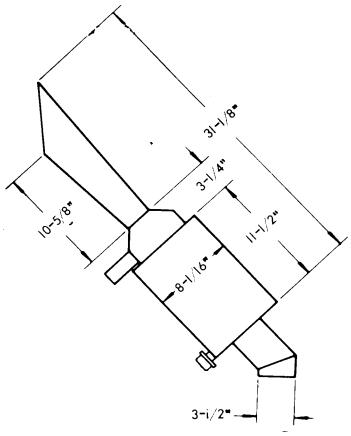

B18854

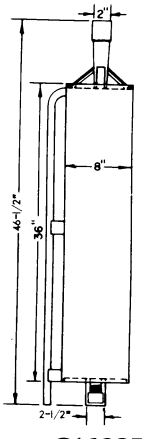

C16085

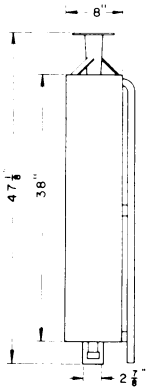

C22001

FMF

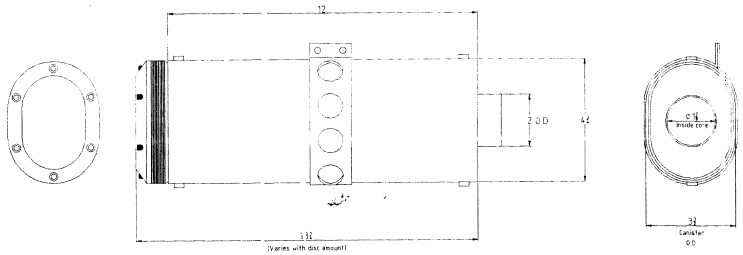

FMF ISDE Model 1000

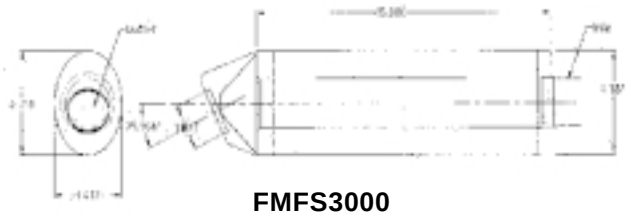

FMFS3000

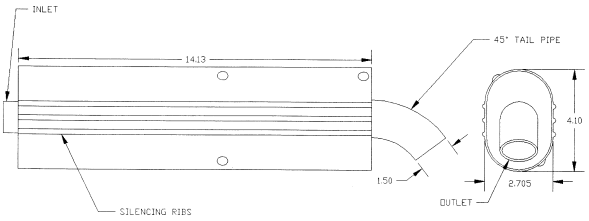

FMF True-Tec TDS 1

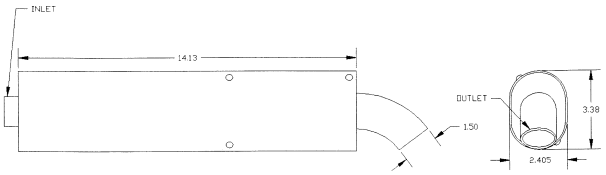

FMF True-Tec TDS 2

FMF RACING

FMF RACING

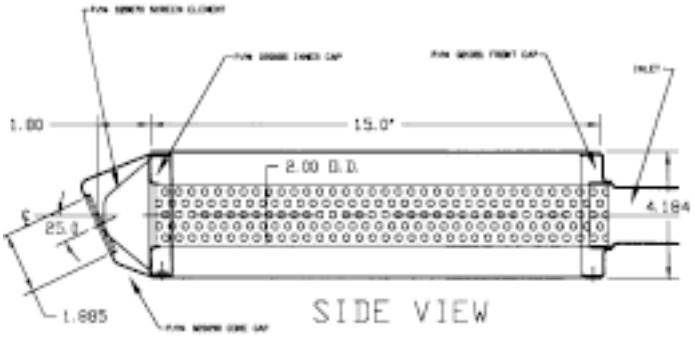

FMF S2000

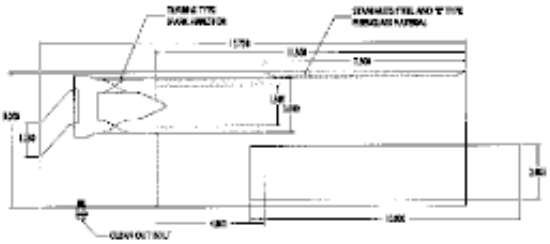

FMF TC4-C400

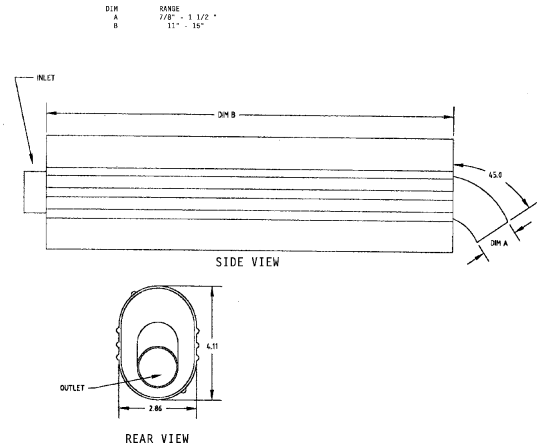

FMF TDS3

FORESTER/FUJI

FORESTER

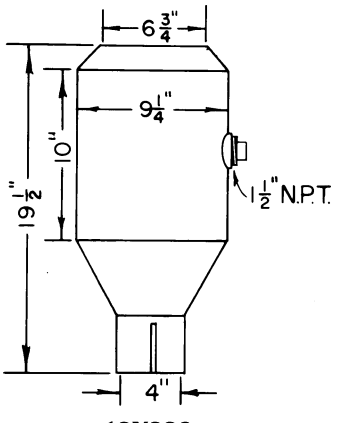

12X330

FUJI

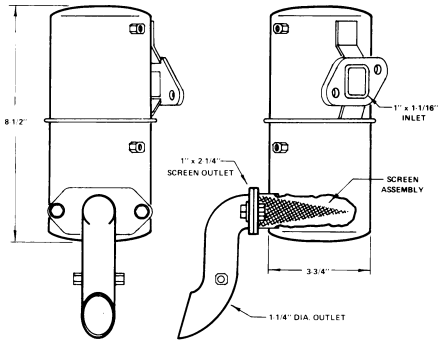

DY-41

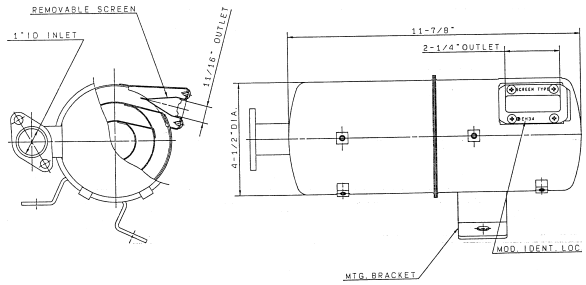

EH34

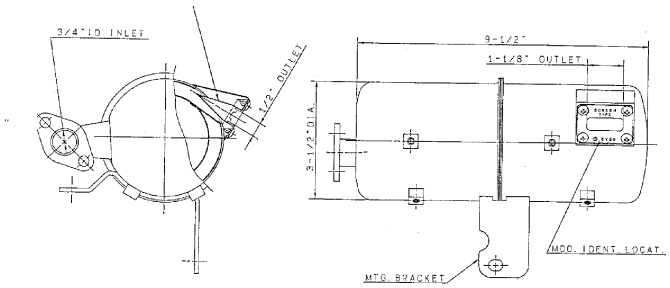

EY-20

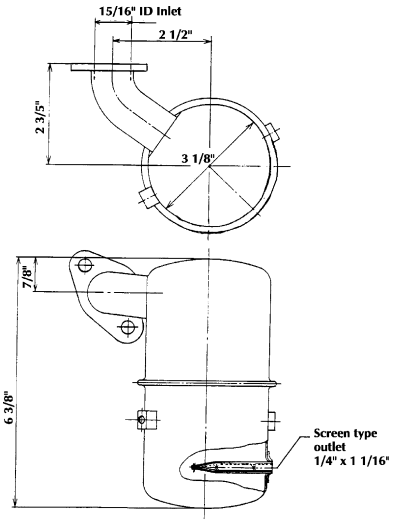

EY20-STD

FUJI *(continued)*

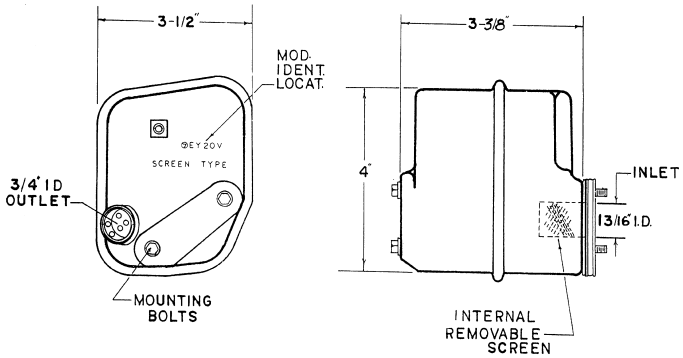

EY 20V

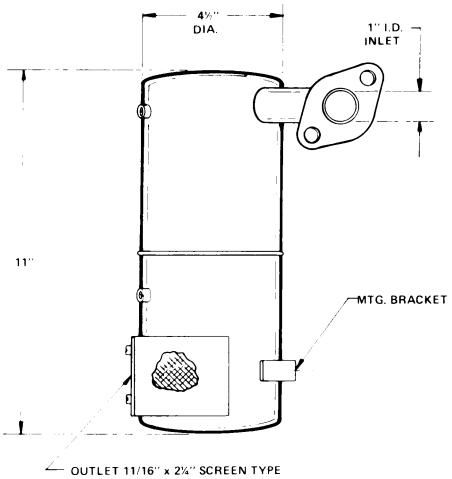

EY35/EY40W

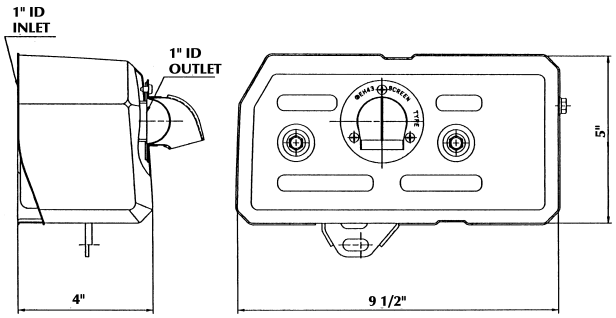

FUJI EH43

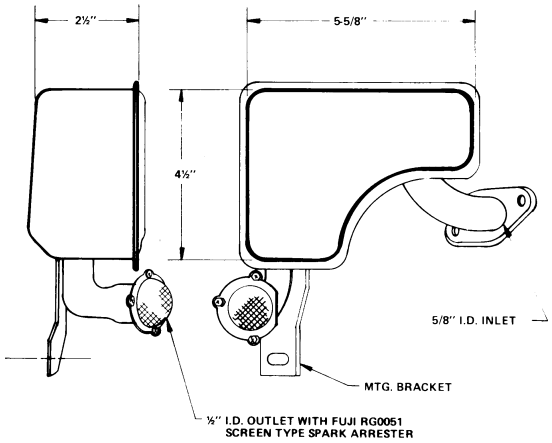

RGO 051

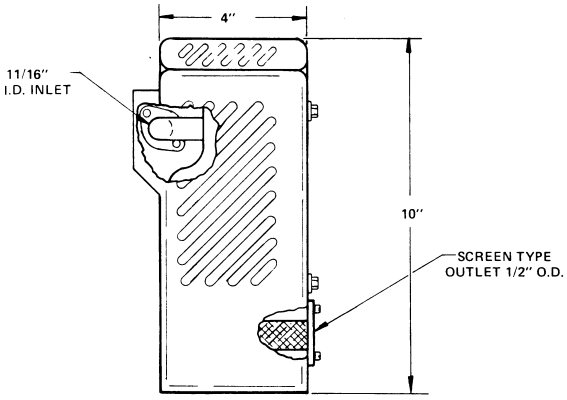

RGO 120

GENERAC

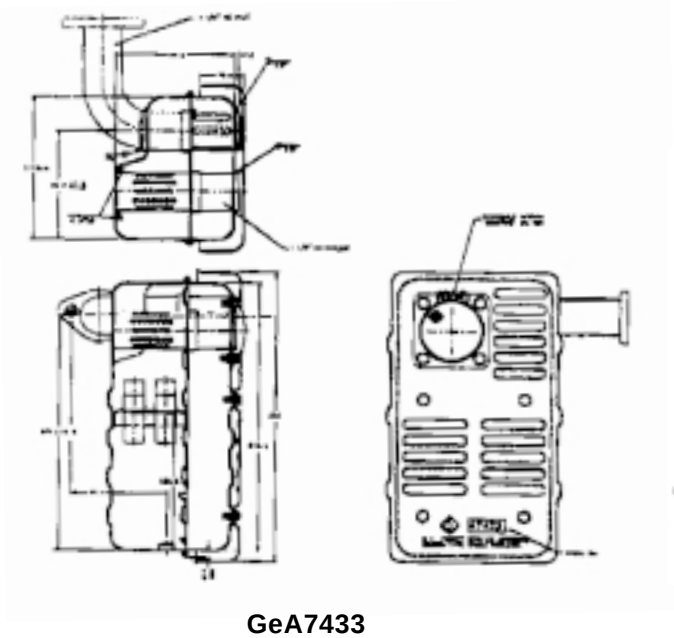

GeA7433

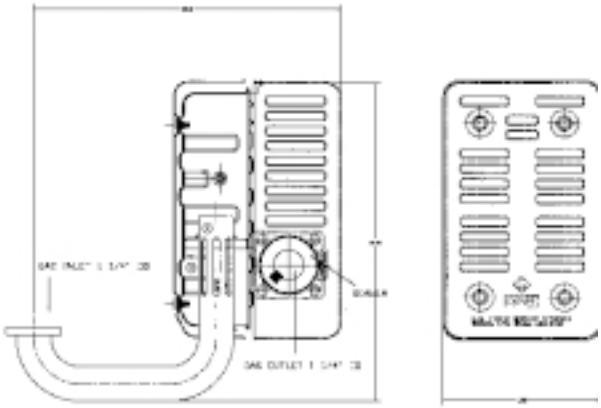

GeC4289

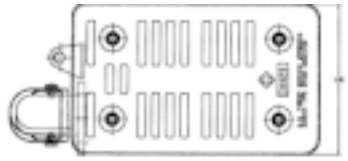

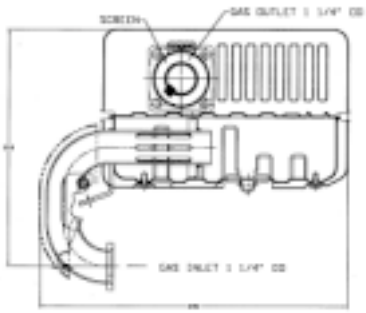

GeC4423

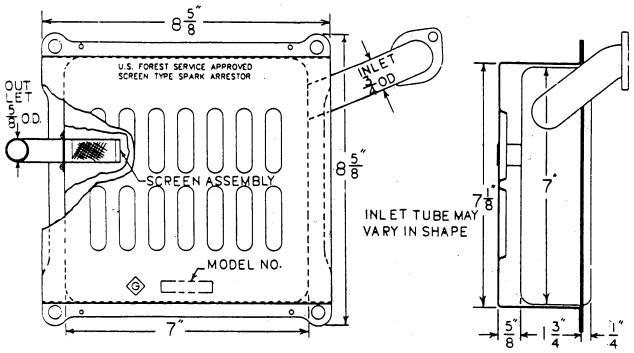

Ge72082 and 72281

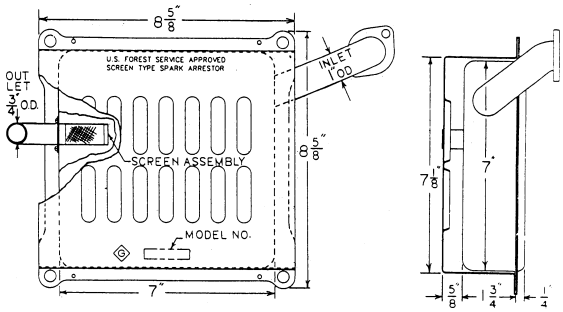

Ge72083

For Generac

30699	–	See Nelson T-11068C
31145	–	T-11159
33232	–	T-11606
37924	–	T-13304 (Approved as T-9458)
37936	–	T-12760B
38560	–	T-13265
39081	–	T-13572
39247	–	T-9458
43951	–	T-14315
43952	–	T-14316
43953	–	T-14321

GENERAC *(continued)*

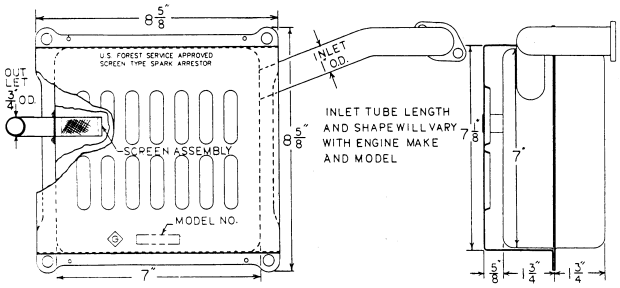

Ge72279

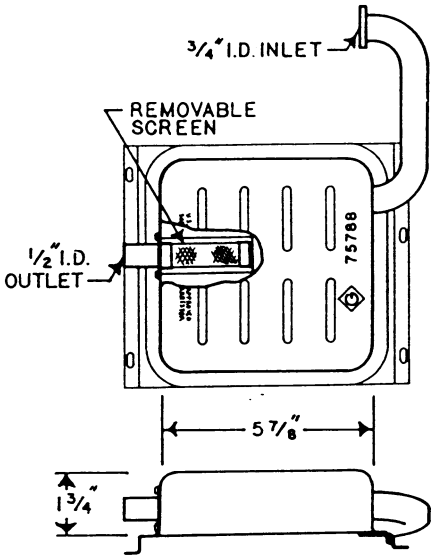

Generac 75788

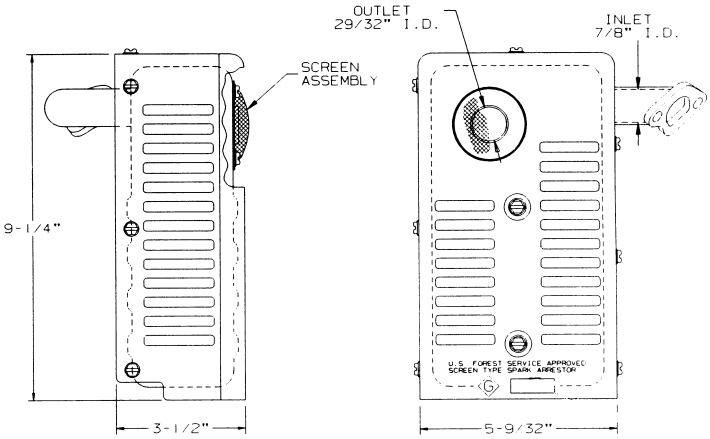

83083

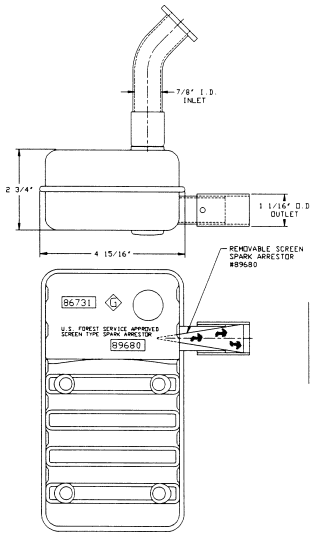

Ge89680

GILL

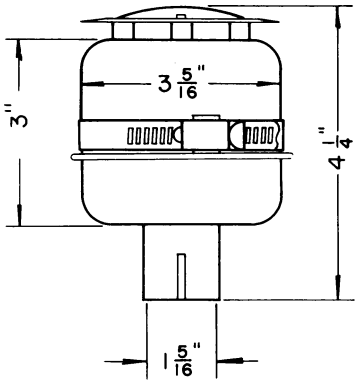

3C

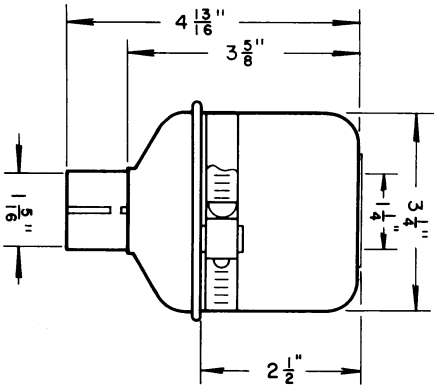

3CIP (Horiz)

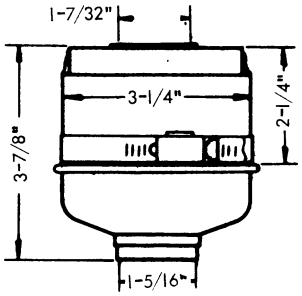

3C-USFS Mod.

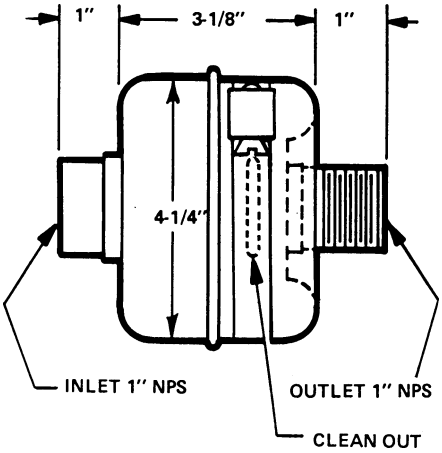

4CIP

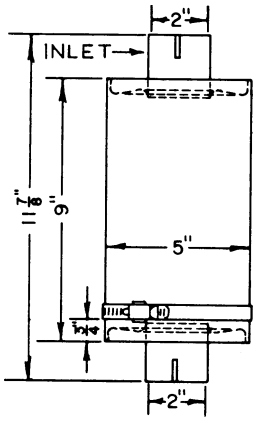

5C20A Inverted

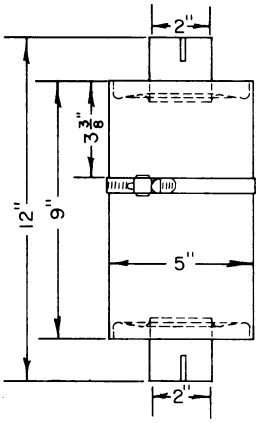

5C20B

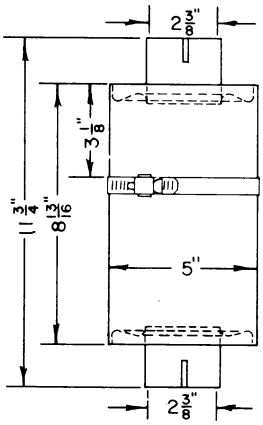

5C23B

GILL *(continued)*

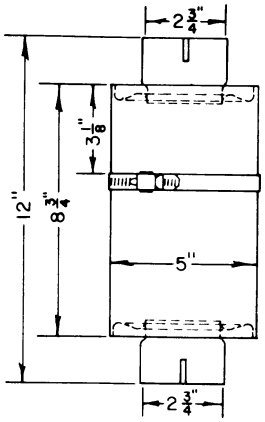

5C26B

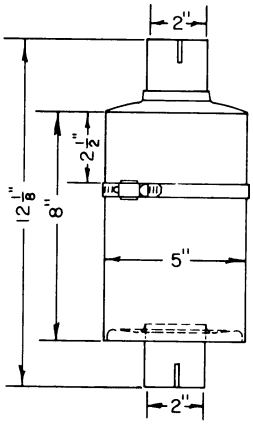

5CV20

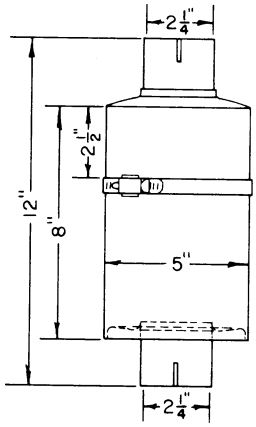

5CV23

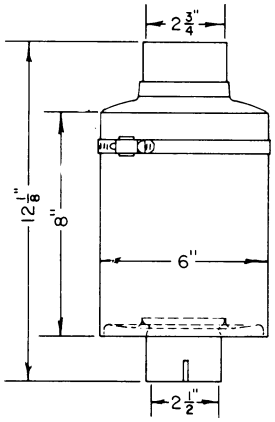

6CV24

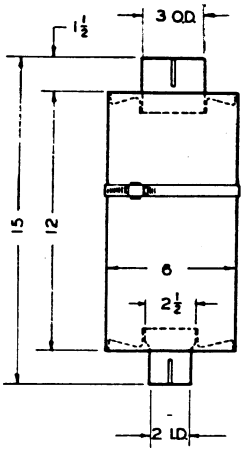

6C2030 (12 in)

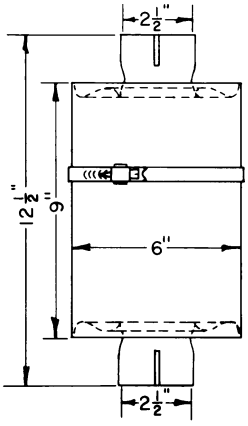

6C24 (12 in)

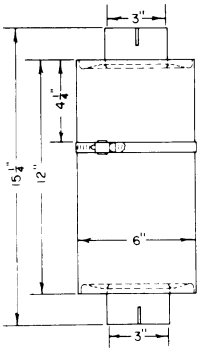

6C30 (12 in)

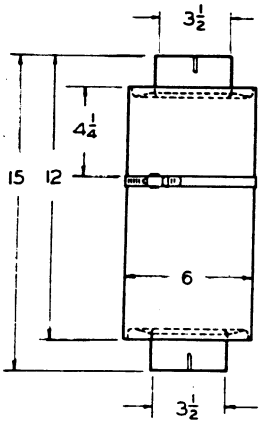

6C34 (12 in)

GILL *(continued)*

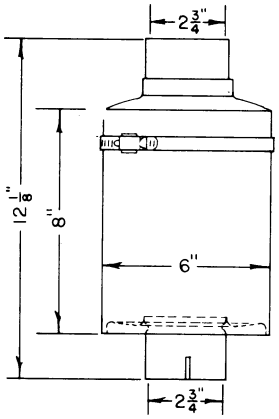

6CV26

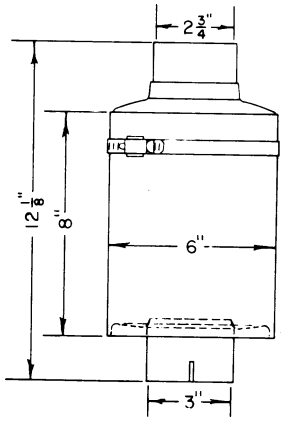

6CV30

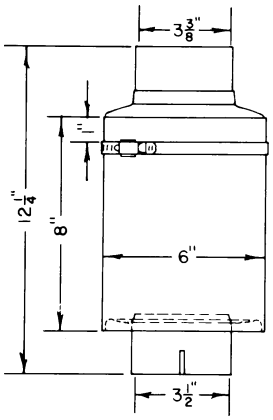

6CV34

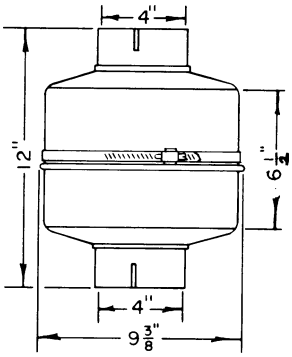

8CV40

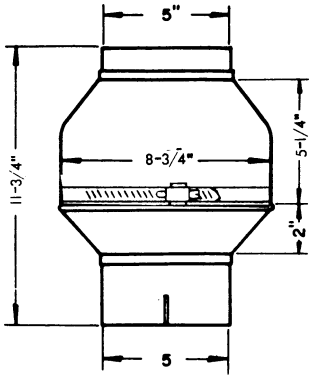

8CV50

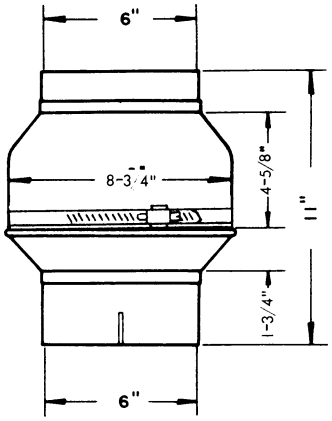

8CV60

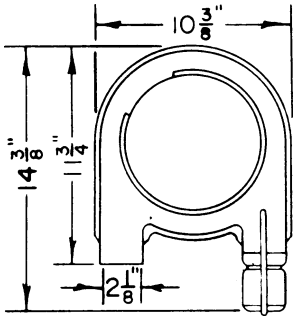

GSF-200

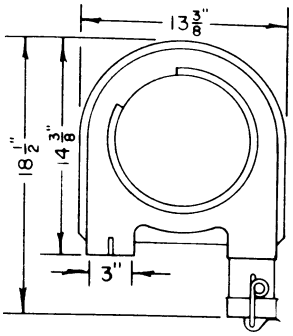

GSF-300

GILL *(continued)*

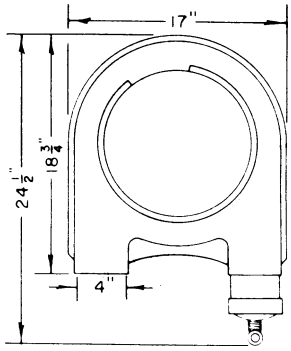

GSF-400

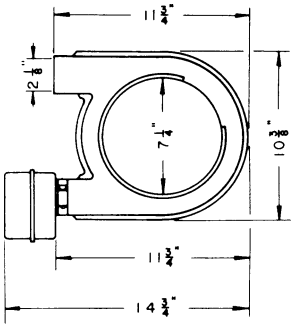

GSH-200

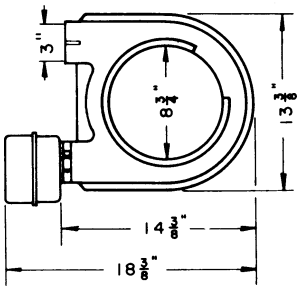

GSH-300

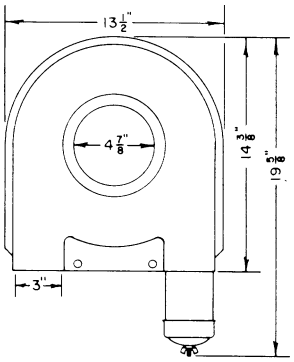

GSO-300

GILSON/GORMAN-RUPP/HALE

GILSON

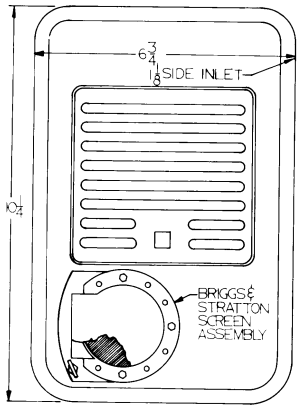

36742 Screen Assembly 392154

GORMAN-RUPP

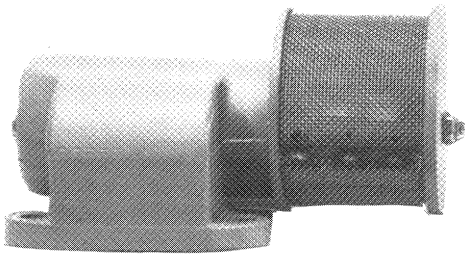

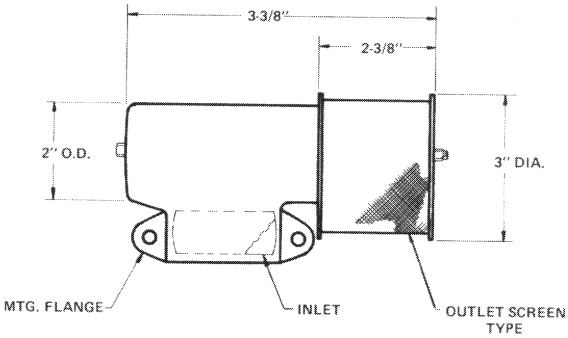

462611-018

HALE

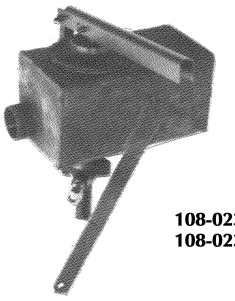

108-0230-02
108-0230-06*

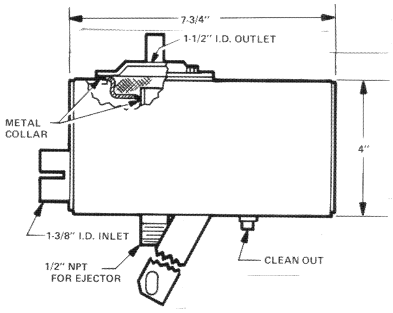

***Modified 108-0230-02 for use on 1-cylinder of an engine. An elbow has been added to the inlet to accomodate mounting.**

HALE 108-0230-02
HALE 108-0230-06

HAPCO

HAPCO

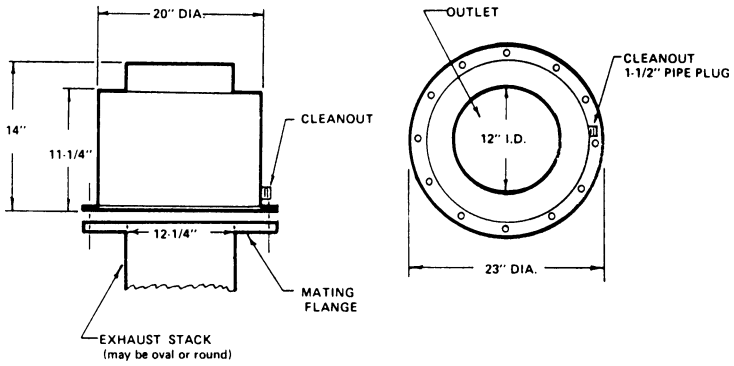

HAP12AC12LP

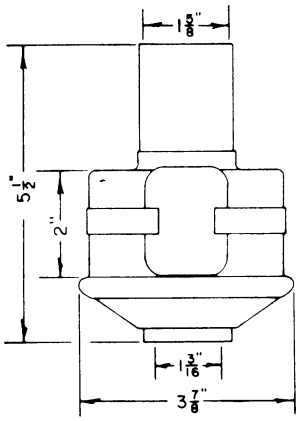

1AA

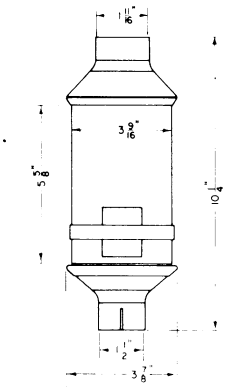

1AA S.A.M. 13-18

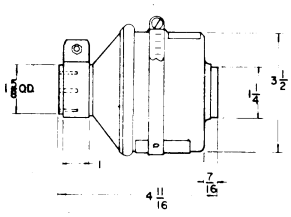

1AAXH

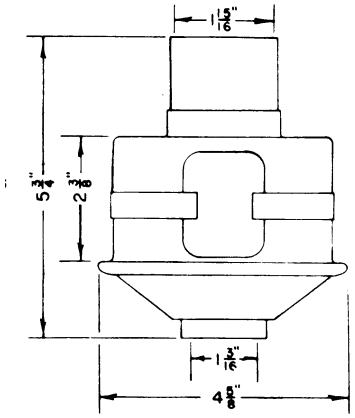

2AA

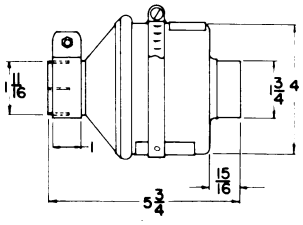

2AAH

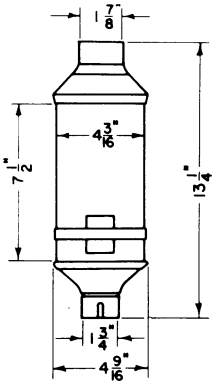

2AA S.A.M. 24-112

HAPCO *(continued)*

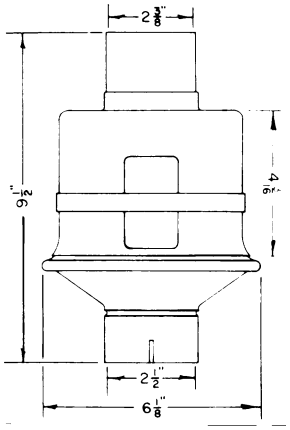

3AA

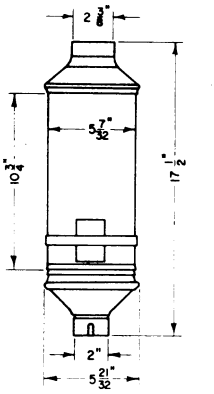

3AA S.A.M. 36-2

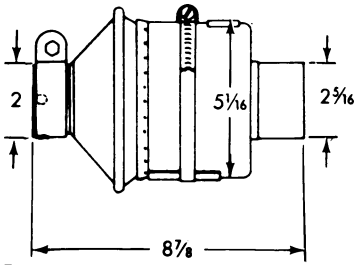

3AAXH

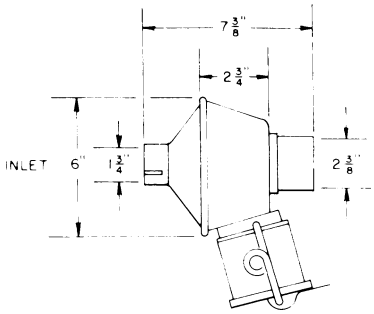

3H

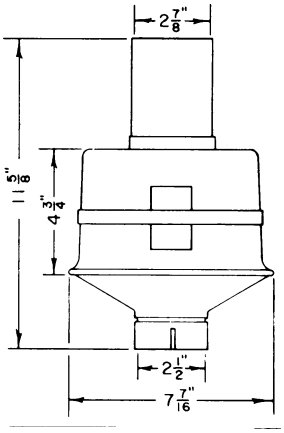

4AA

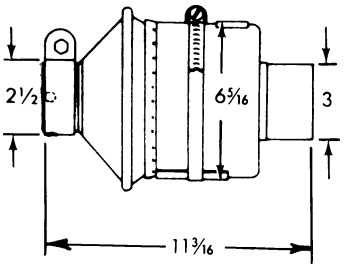

4AAH

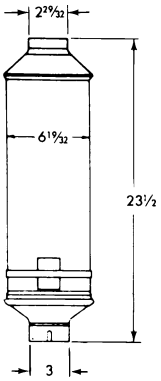

4AA S.A.M. 48-3

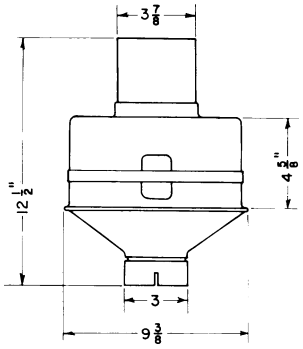

5AA

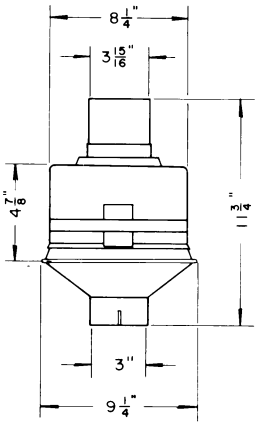

5AA (altered)

HAPCO *(continued)*

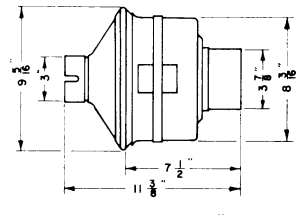

5AAH

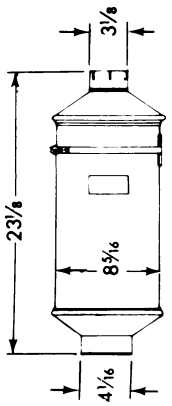

5AAH S.A.M. 59-3

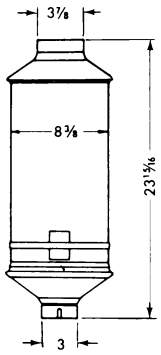

5AA S.A.M. 59-3

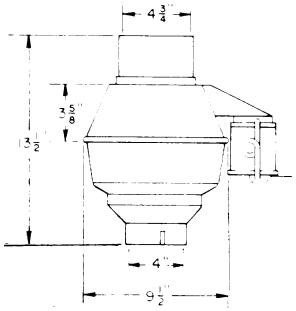

6A or 6H

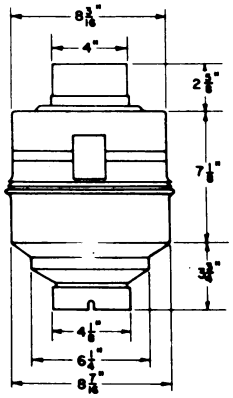

6AA (4" outlet)

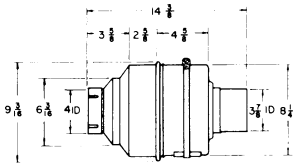

6AAH

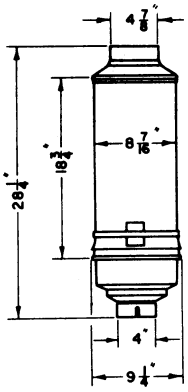

6AA S.A.M. 69-4

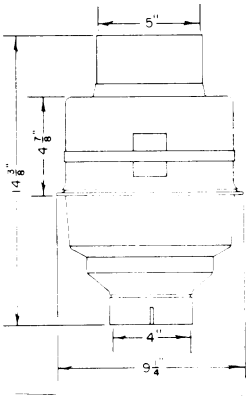

6AB

HAPCO *(continued)*

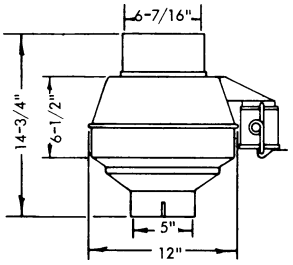

7A or 7H

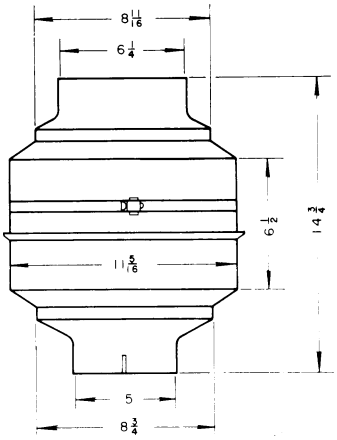

7AB

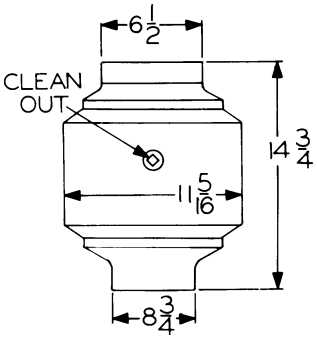

7AC

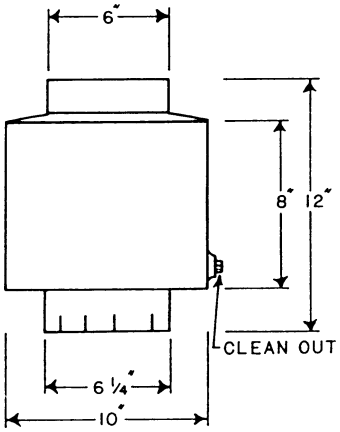

7AC1

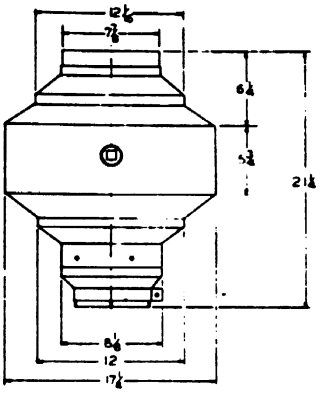

8AB

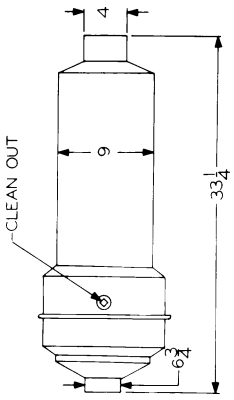

S.A.M. 712

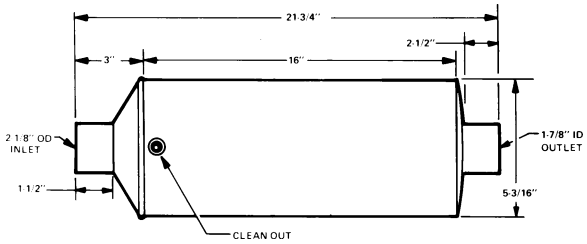

SASR 36-H, 3AAXH

HAPCO *(continued)*

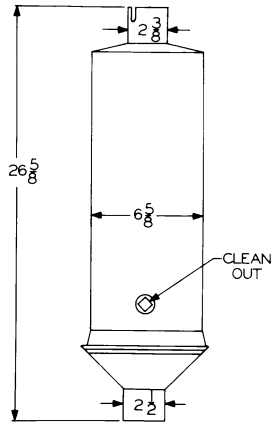

SASR 48

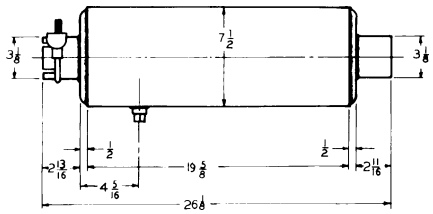

SASR 48-H

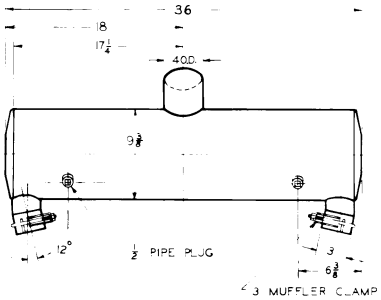

SASR 559

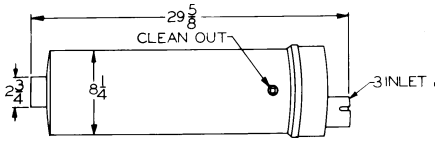

SASR 59

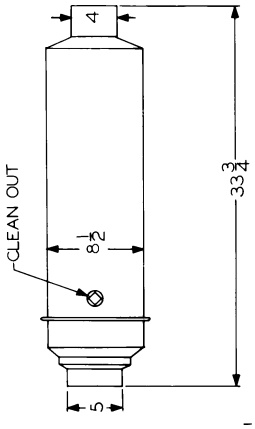

SASR 69-H

HARLEY DAVIDSON

HARLEY DAVIDSON

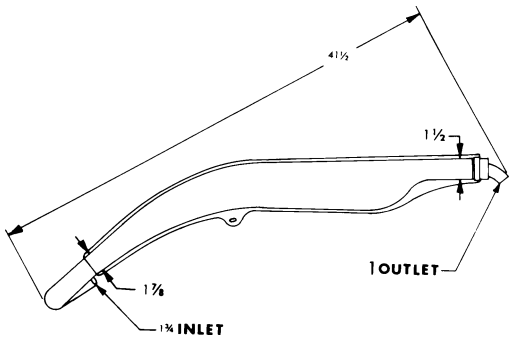

65234-75P

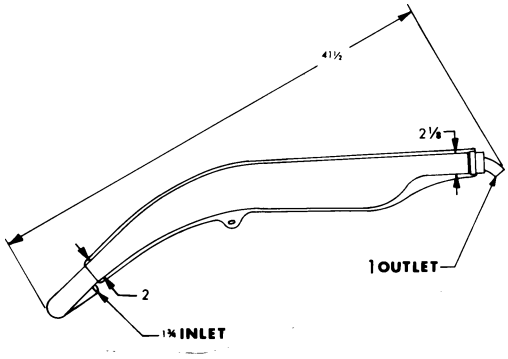

65241-75P

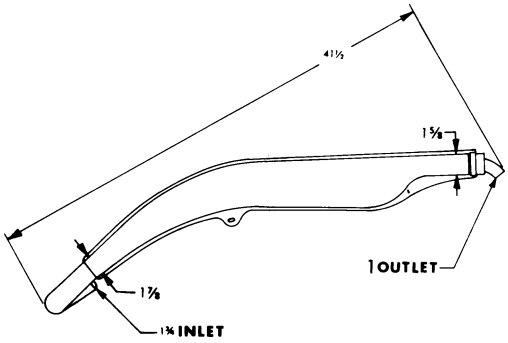

65463-75P

HODAKA/HODAKA-KRIZMAN/HONDA

HODAKA

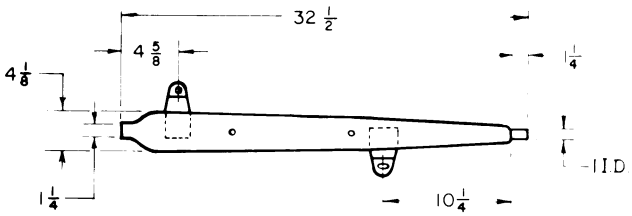

ACE 90D

HODAKA-KRIZMAN

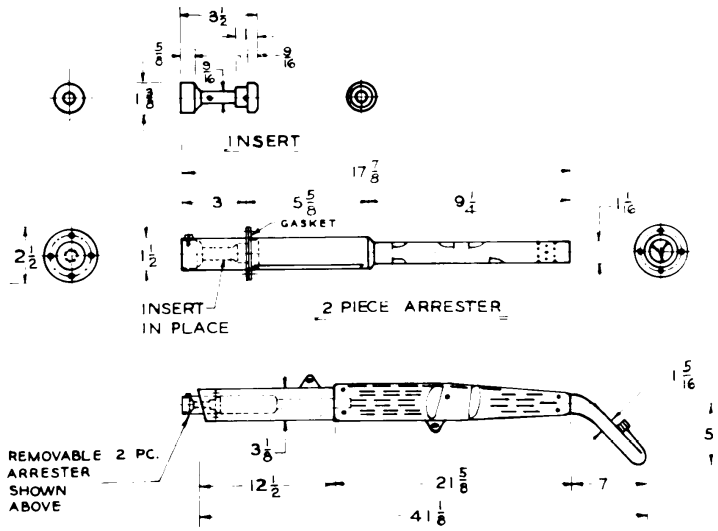

ACE 100

HONDA

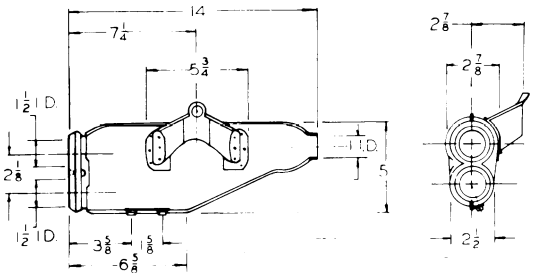

72

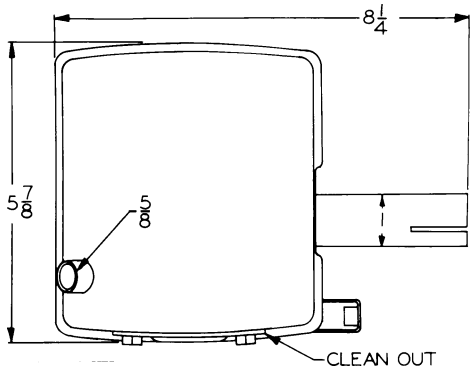

113

HONDA *(continued)*

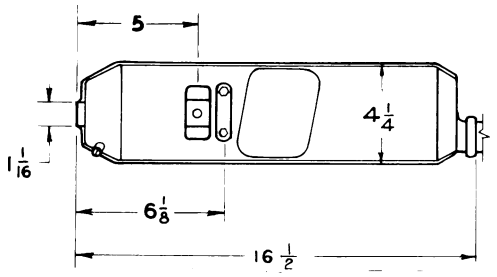

175

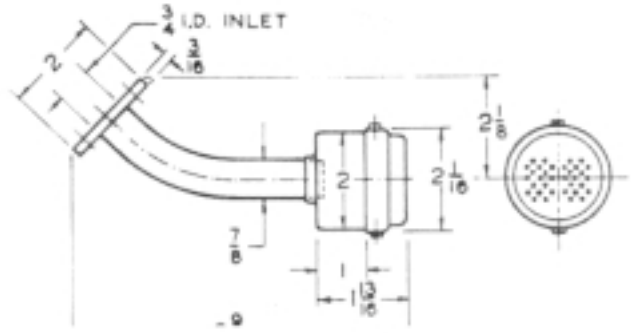

200

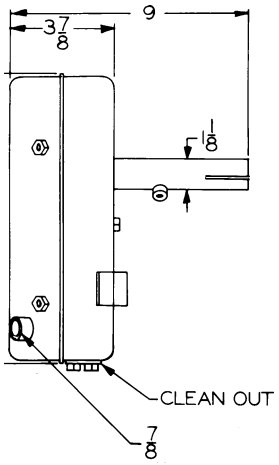

405-405A

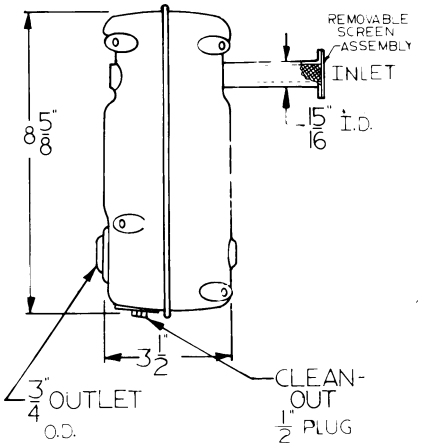

408

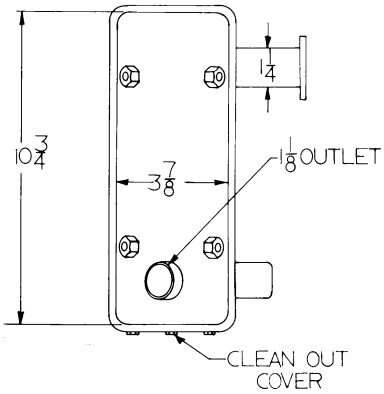

503

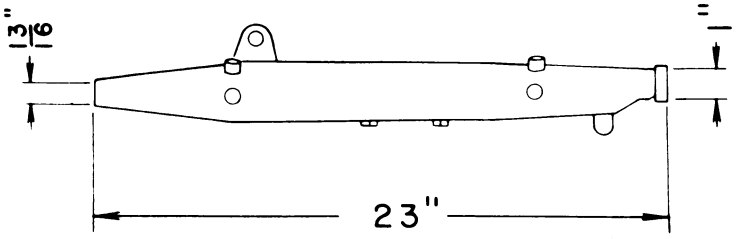

1063

HONDA *(continued)*

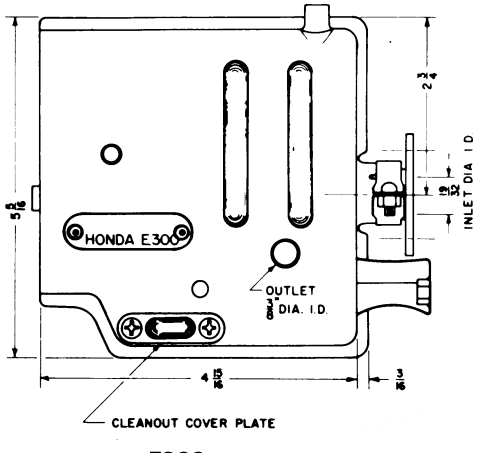

E300

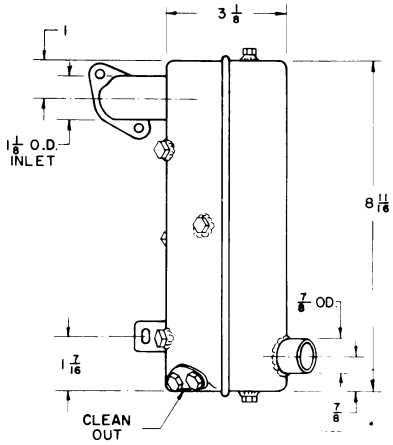

E400

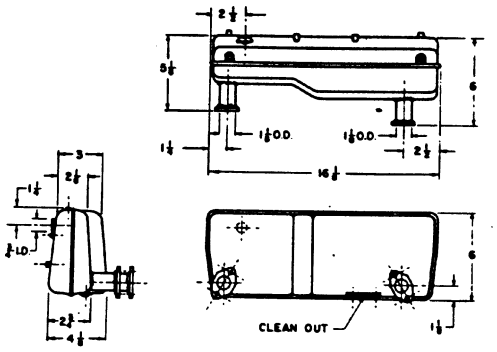

E600

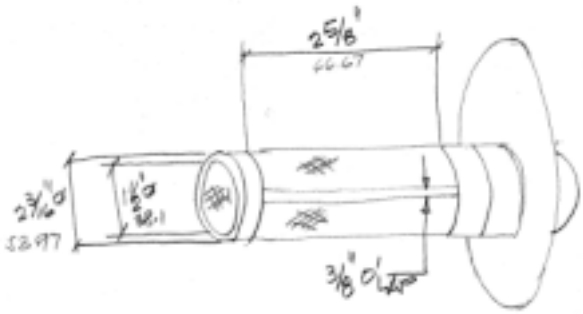

HM HN1 A1

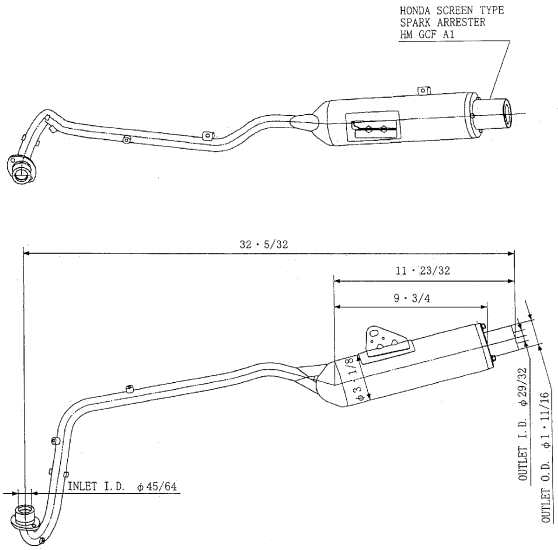

HM GCF A1

HONDA *(continued)*

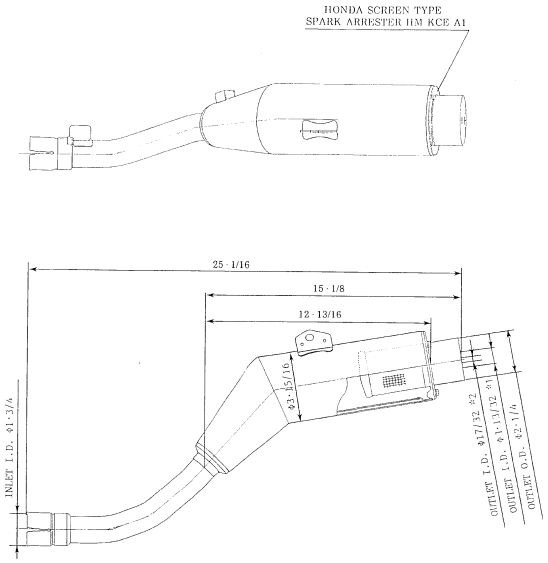

HM KCE A1

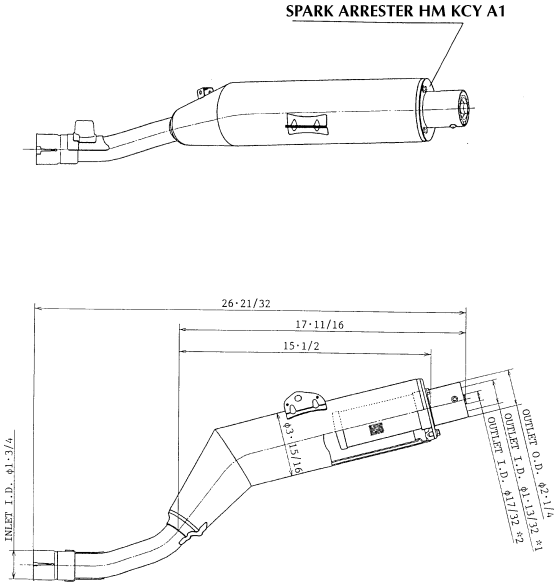

HM KCY A1

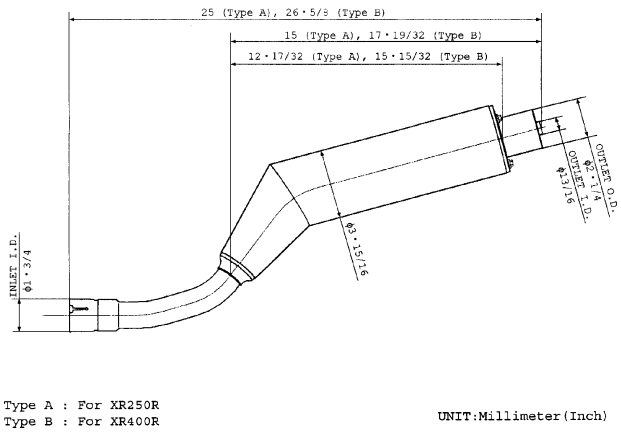

HM KCY A2

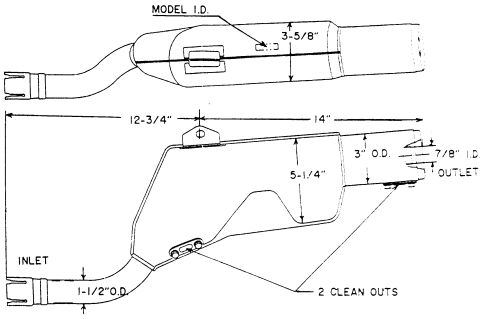

HM KV6 A1

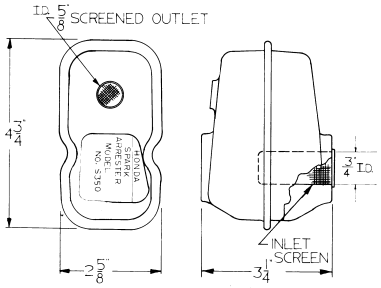

S-350

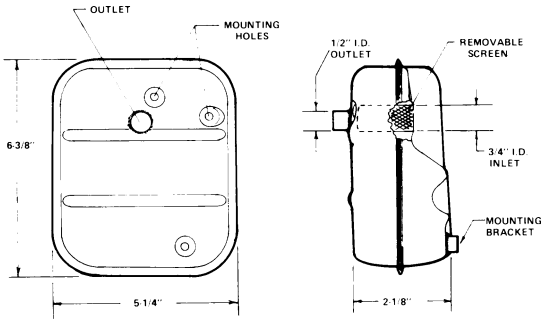

S-351

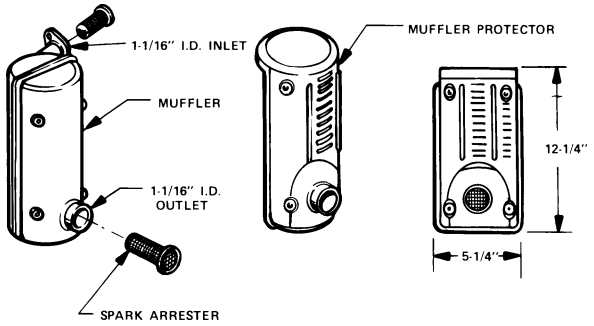

S-352

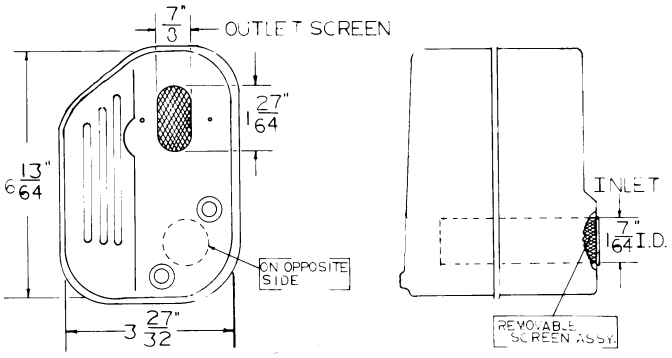

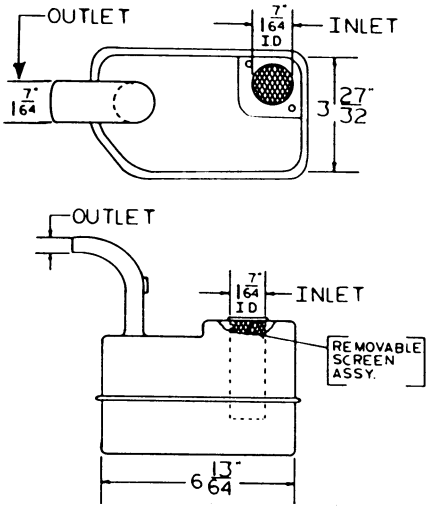

Note: This Honda S-353 has one body shape with outlet opposite inlet, with NO outlet extension, and one body with outlet on same side as inlet—outlet has extension pipe and same screen.

S-353

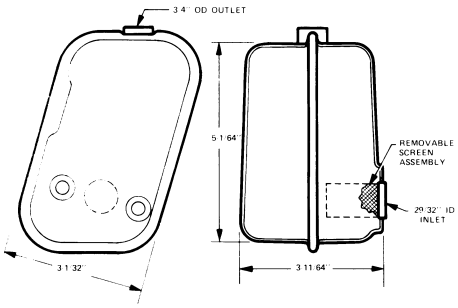

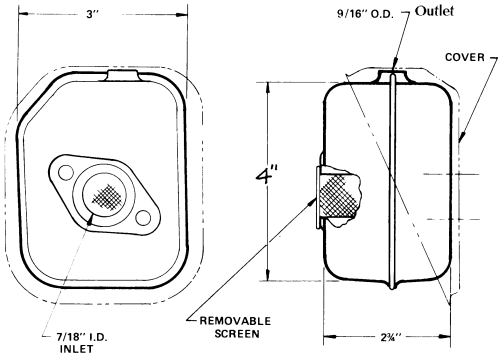

S-354

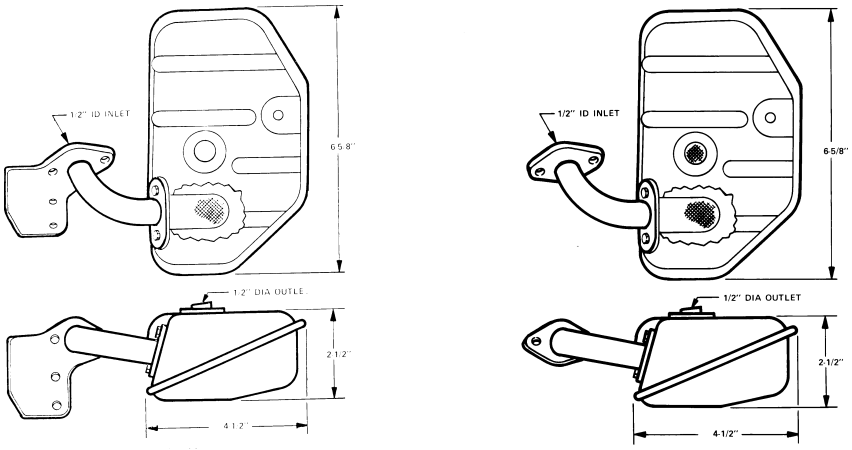

S-355

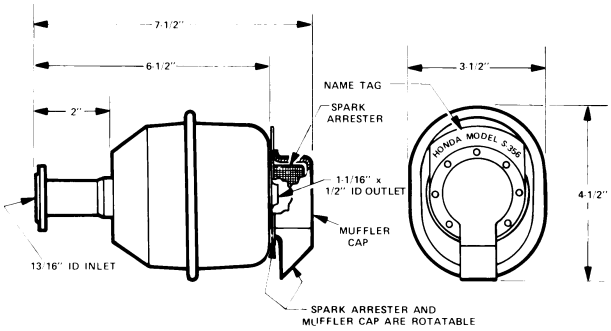

S-356

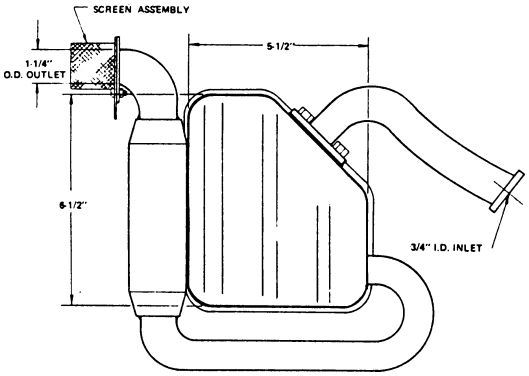

S-356A

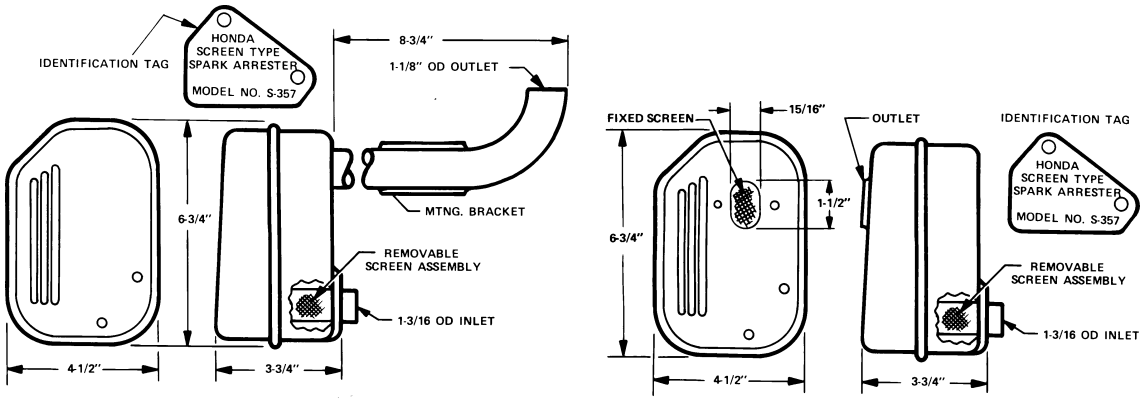

S-357

HONDA *(continued)*

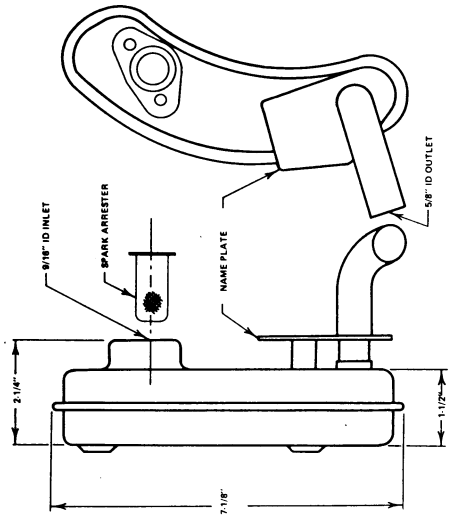

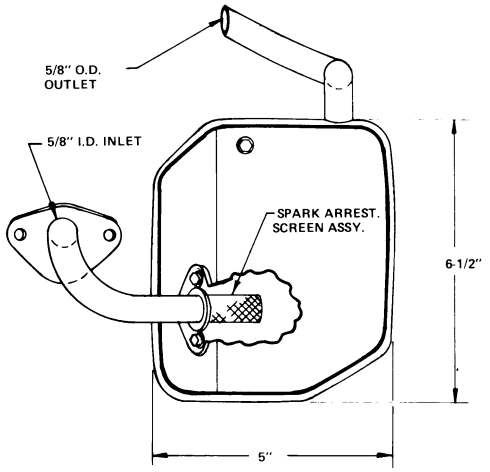

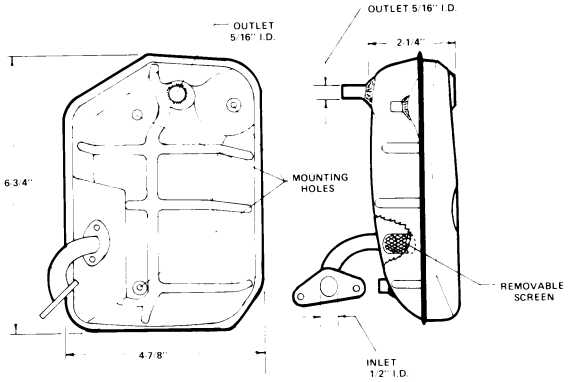

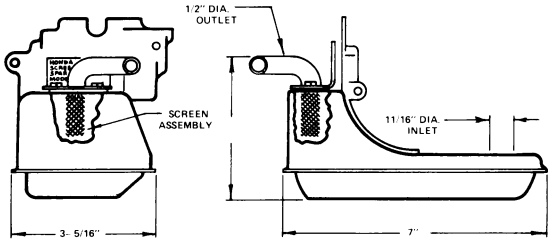

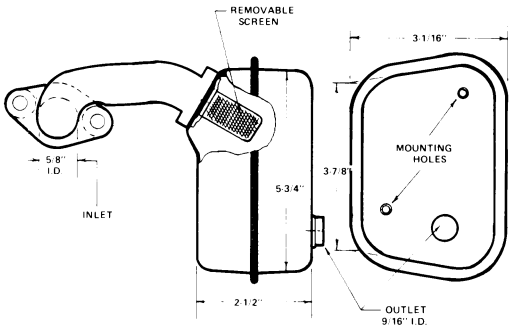

S-358

HONDA *(continued)*

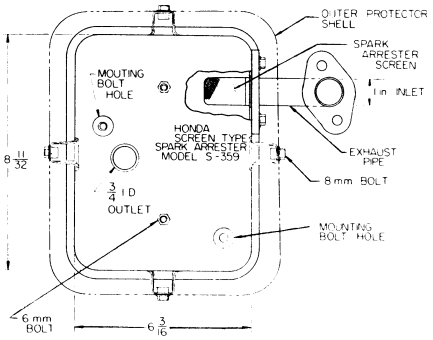

S-359

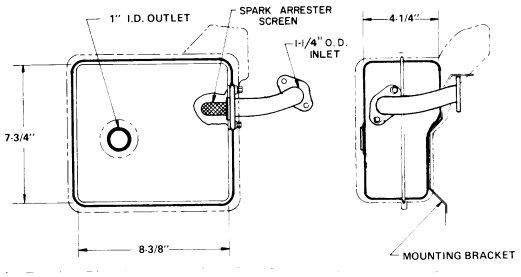

S-360

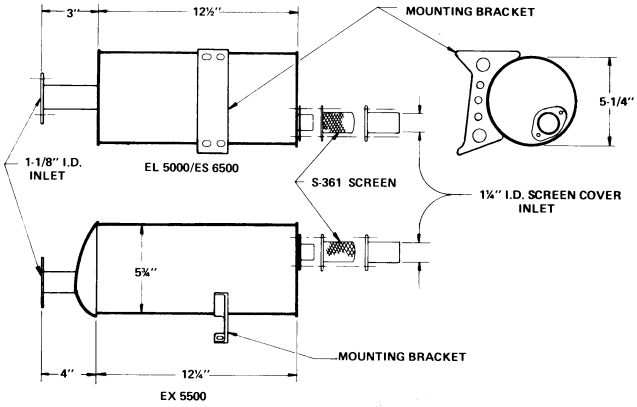

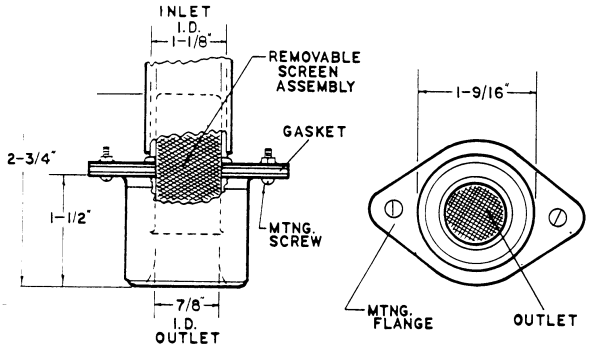

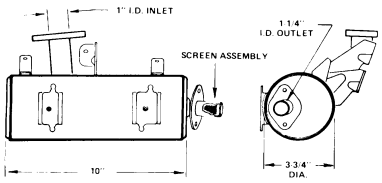

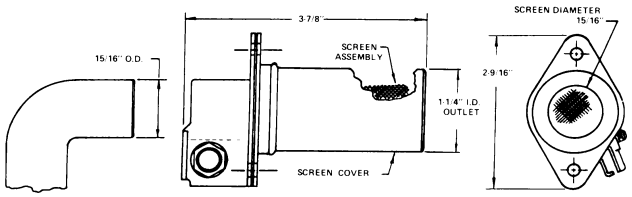

S-361

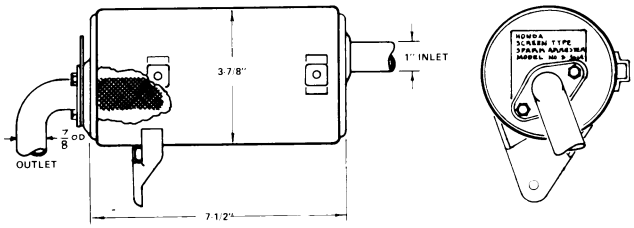

S-361A

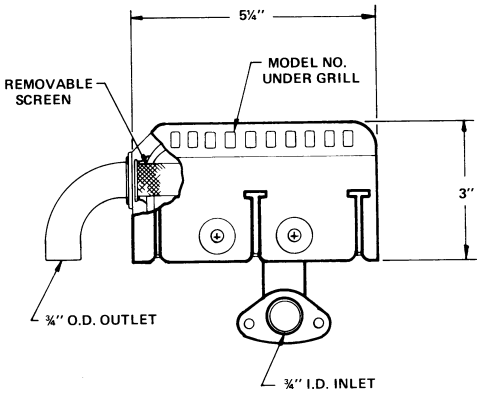

S-362

HONDA *(continued)*

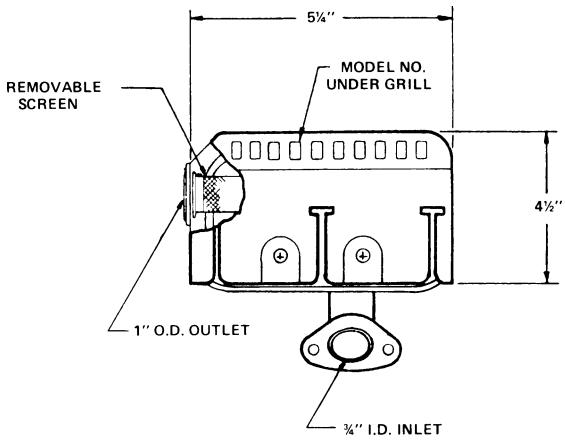

S-363

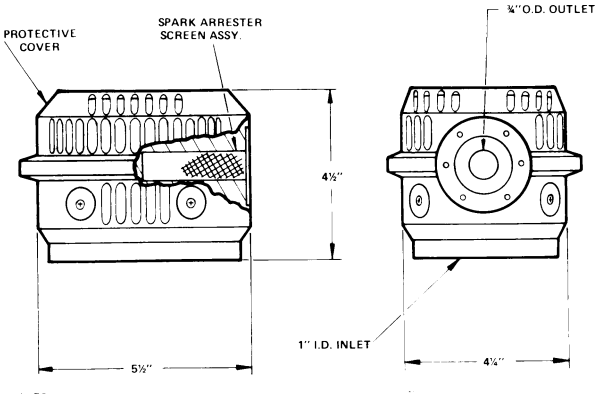

S-364

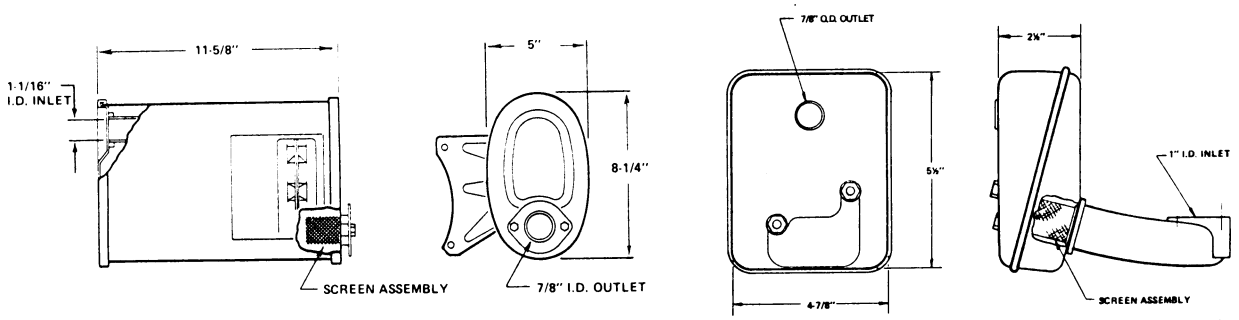

S-365

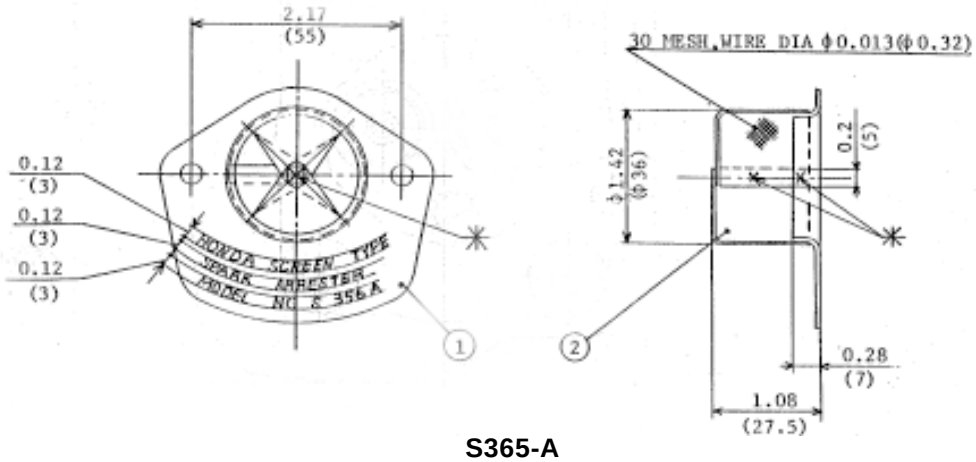

S365-A

HONDA *(continued)*

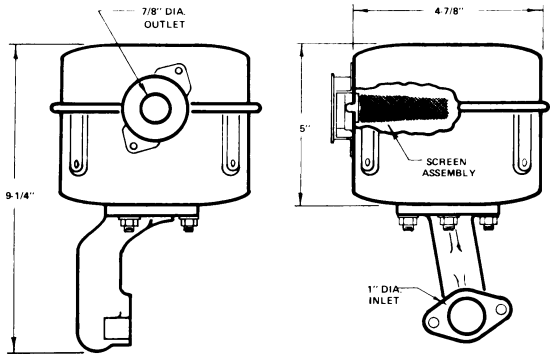

S-366

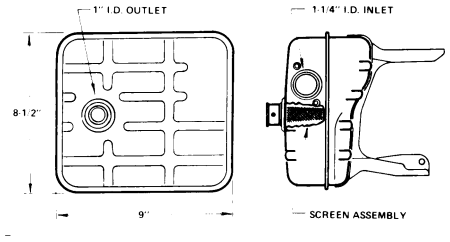

S-366A

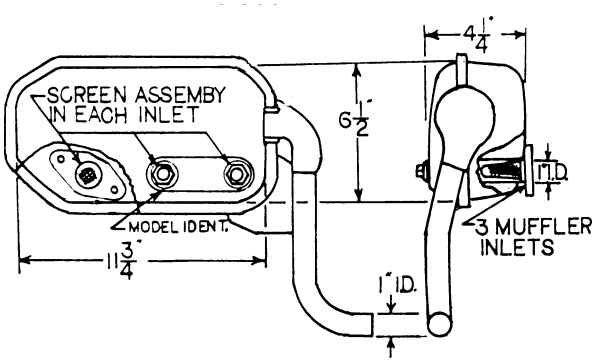

S-366B

HONDA *(continued)*

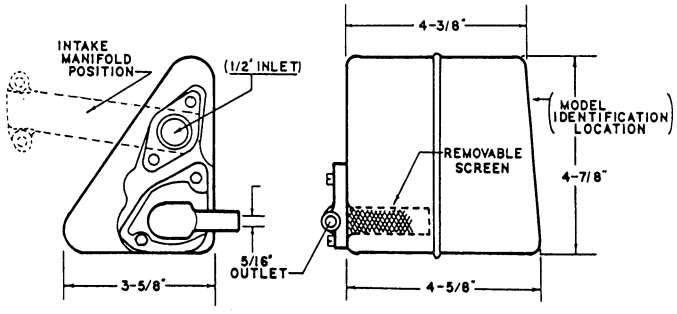

S-367

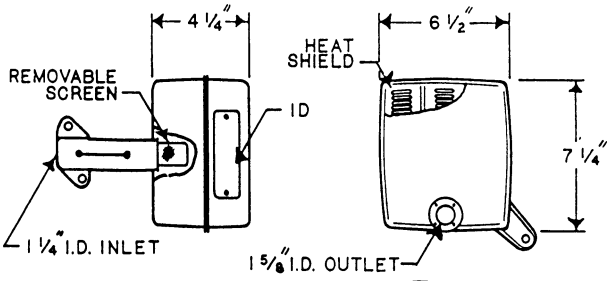

S-368

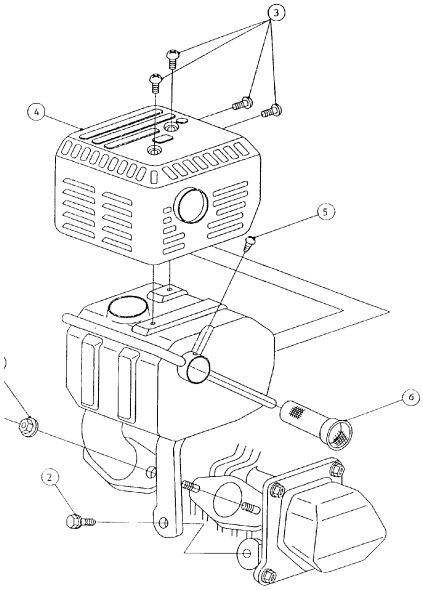

S-415

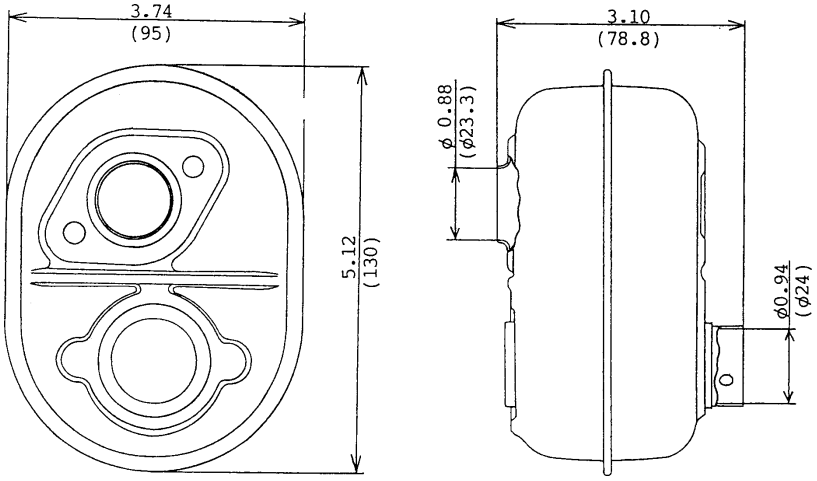

S-417

HONDA *(continued)*

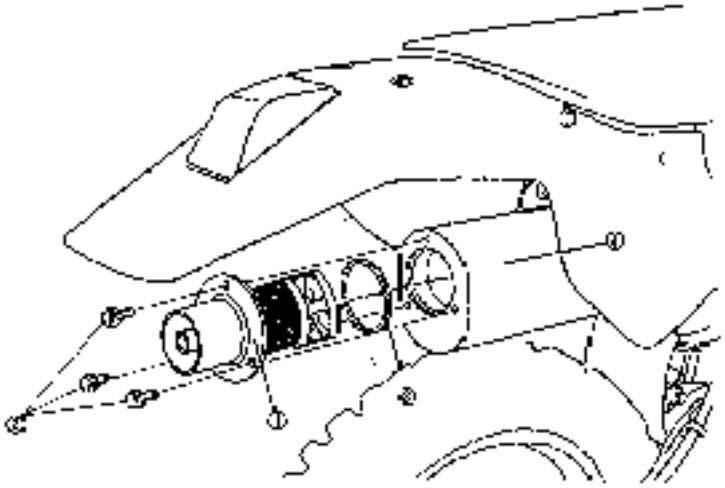

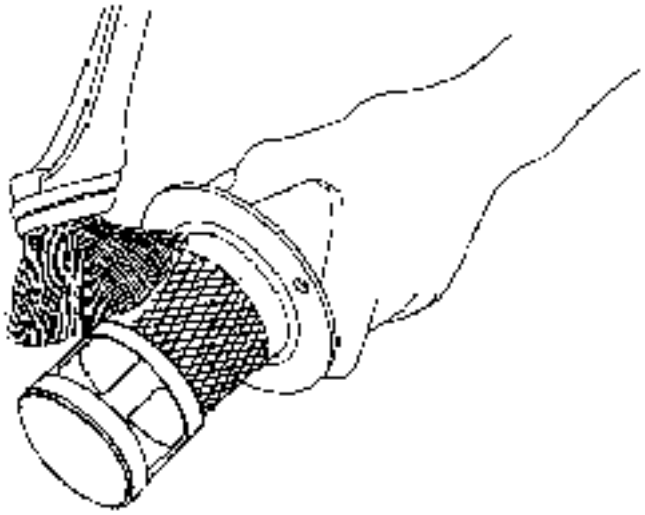

S-418

HONDA-KRIZMAN

HONDA-KRIZMAN

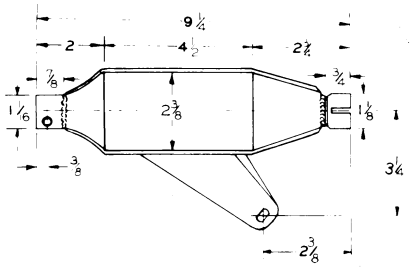

103

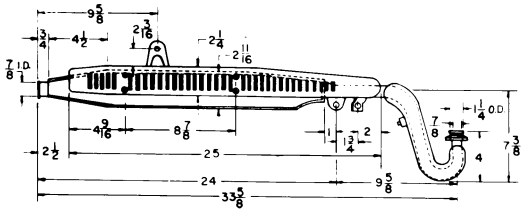

104

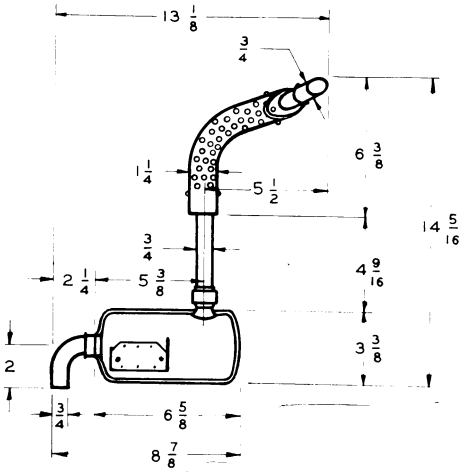

105

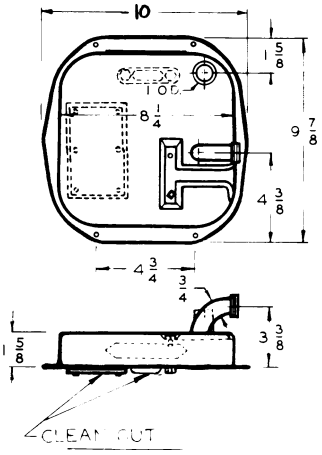

106

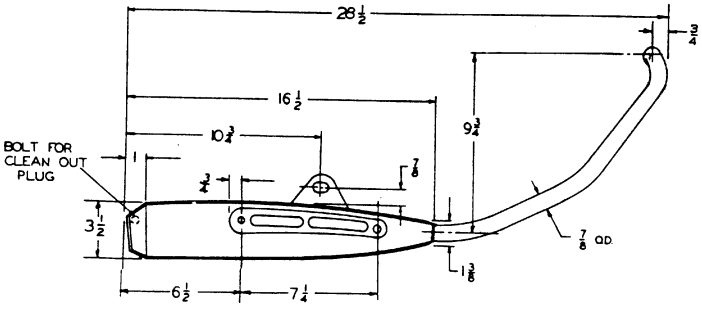

107

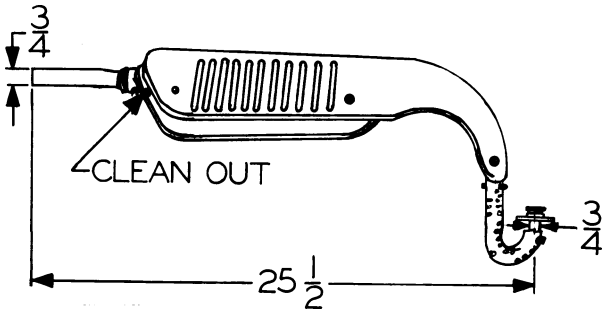

108

HONDA-KRIZMAN *(continued)*

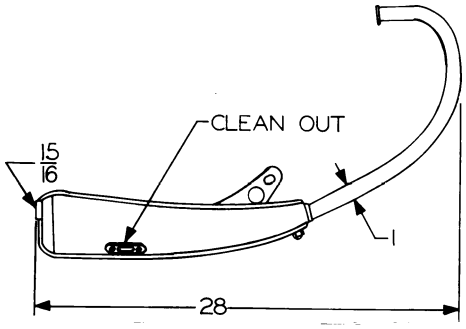

109

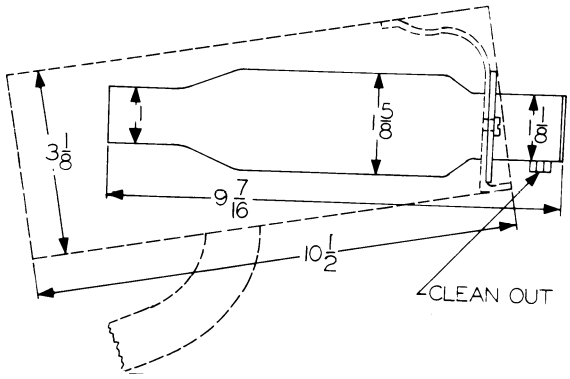

111

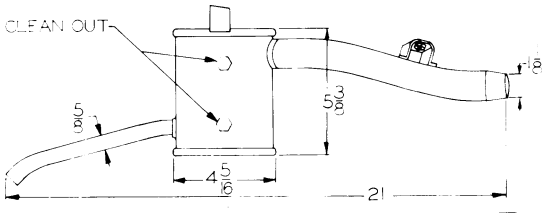

112

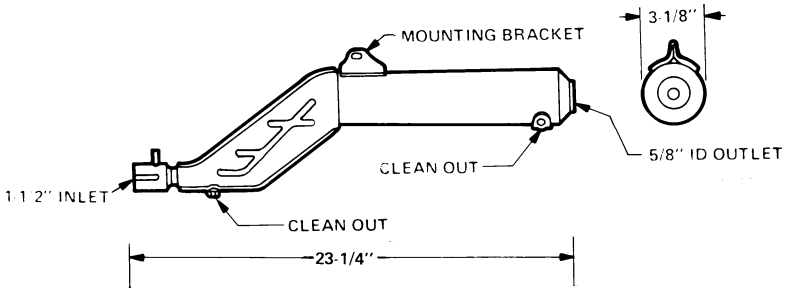

115 Production Model

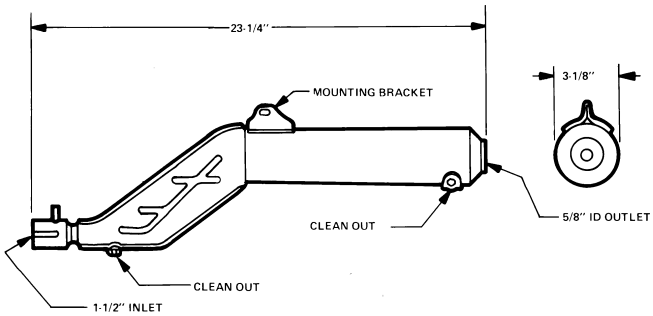

116

HONDA-KRIZMAN *(continued)*

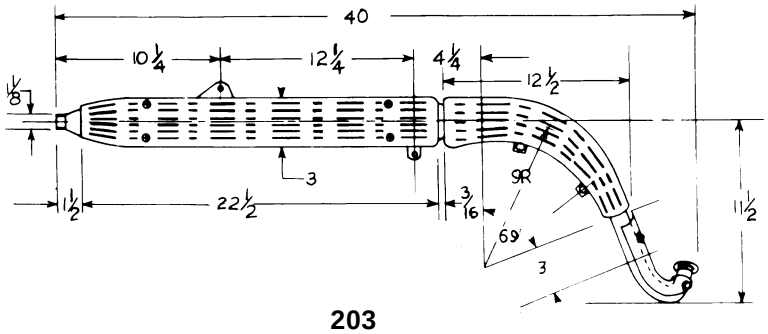

203

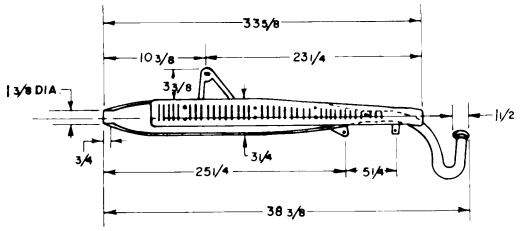

204

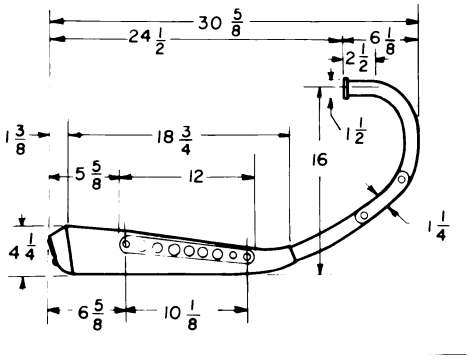

205

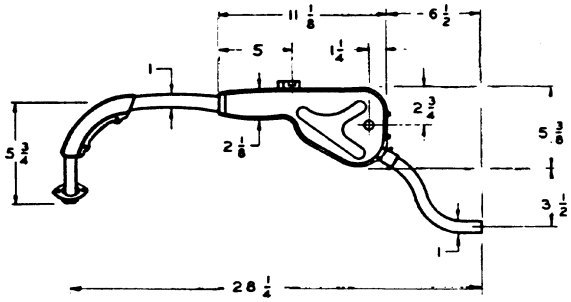

206

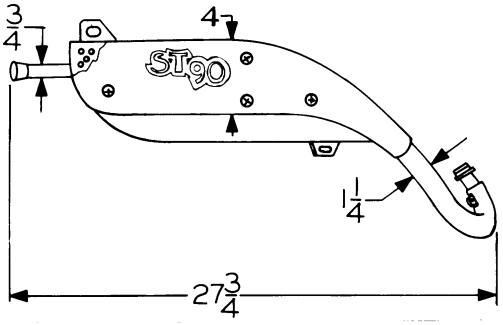

207

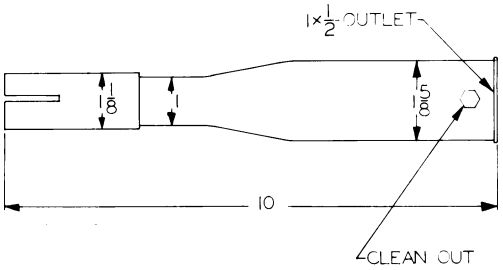

209

HONDA-KRIZMAN *(continued)*

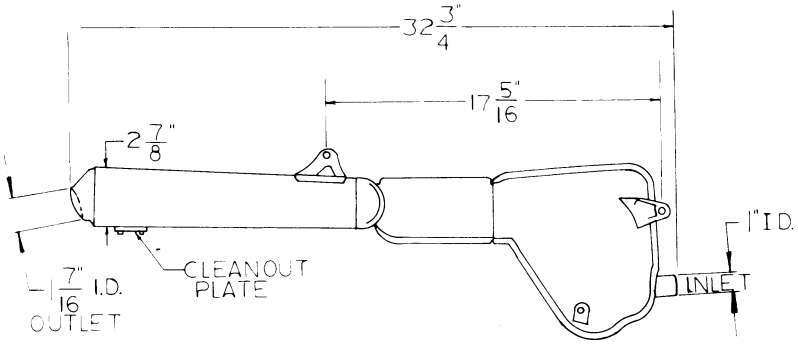

210

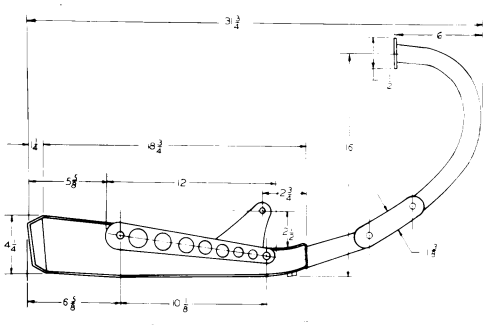

300

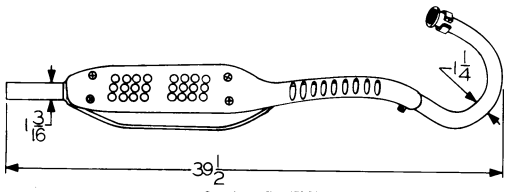

301

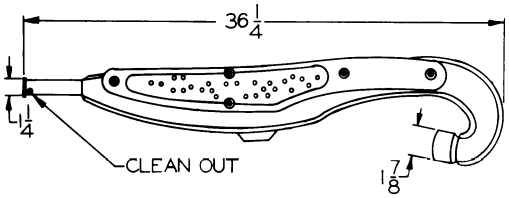

303

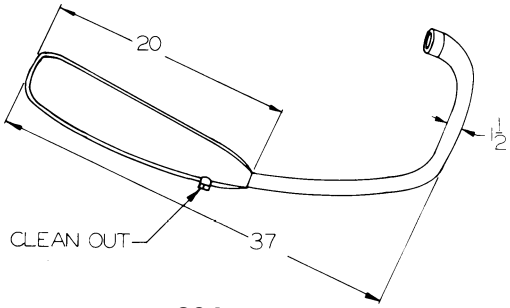

304

HONDA-KRIZMAN *(continued)*

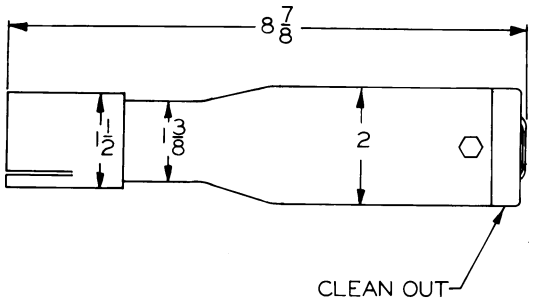

305

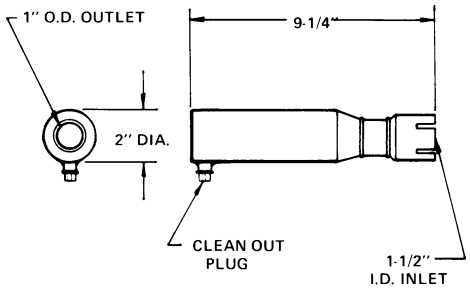

306

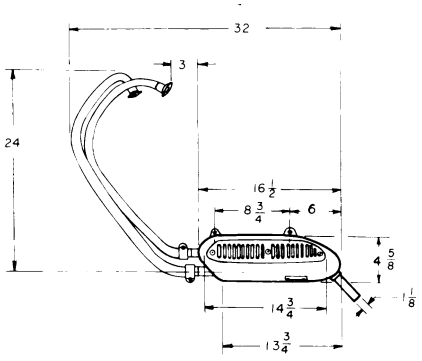

400

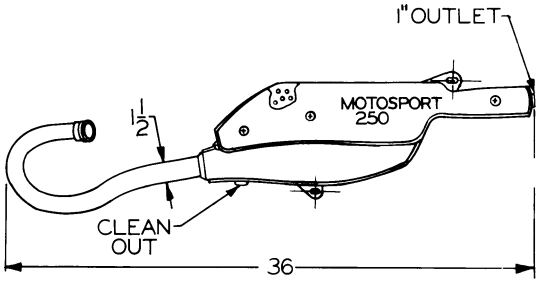

401

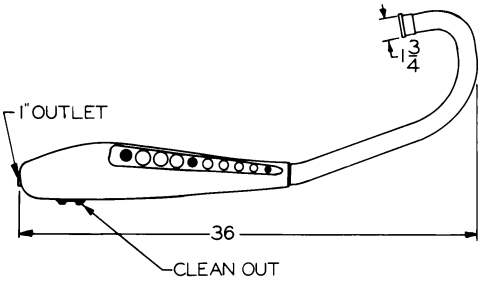

402

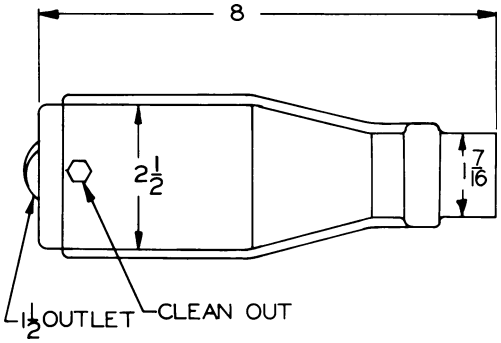

404

HONDA-KRIZMAN *(continued)*

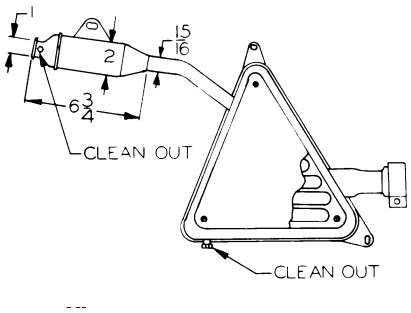

406

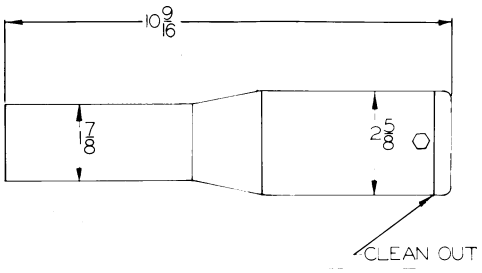

407

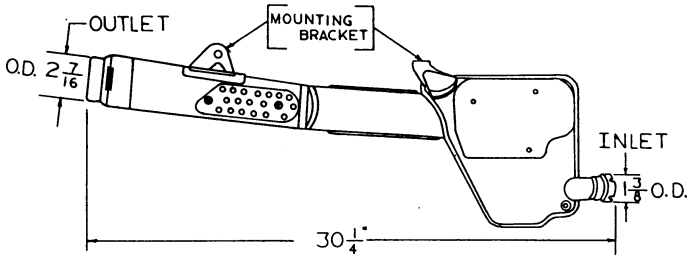

409

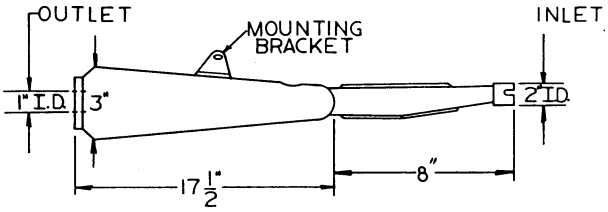

409A

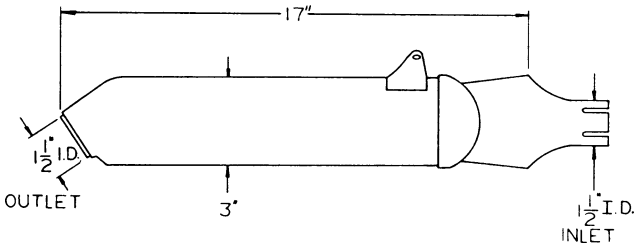

410

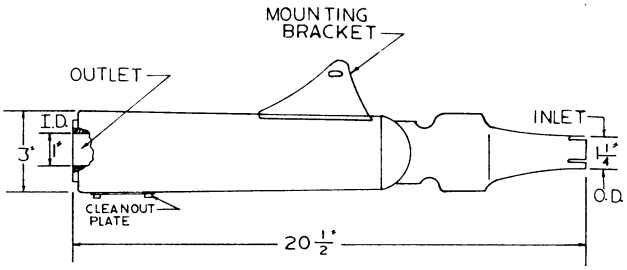

411

HONDA-KRIZMAN *(continued)*

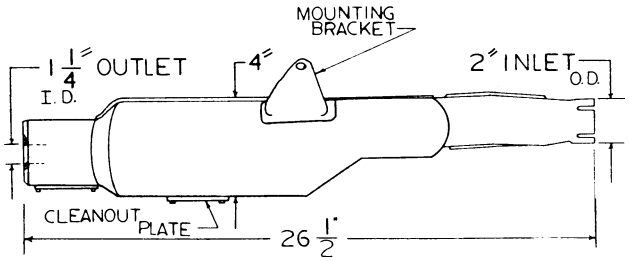

412

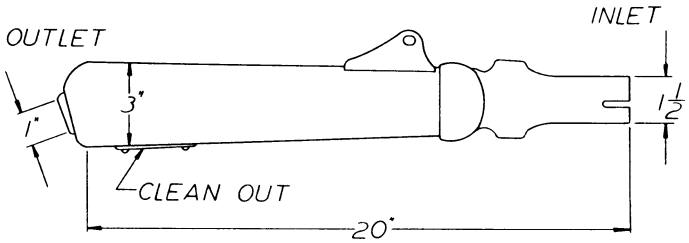

413

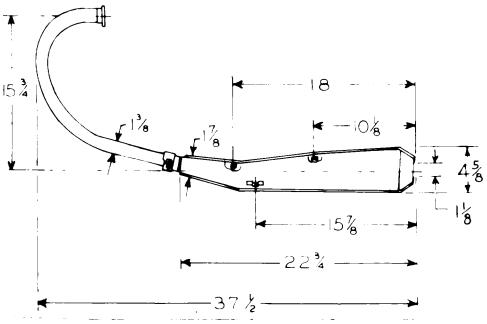

500

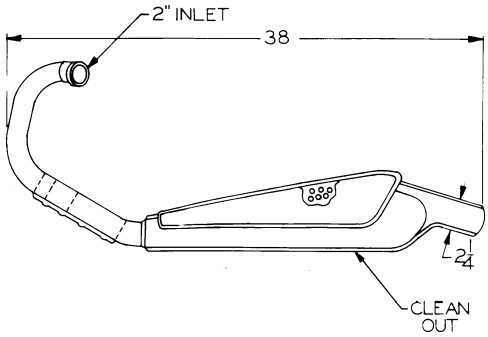

501

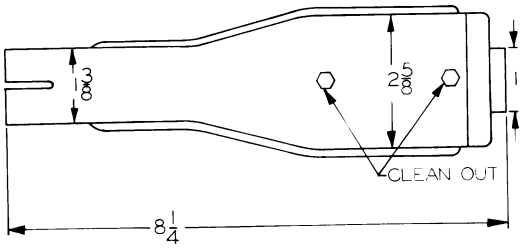

502

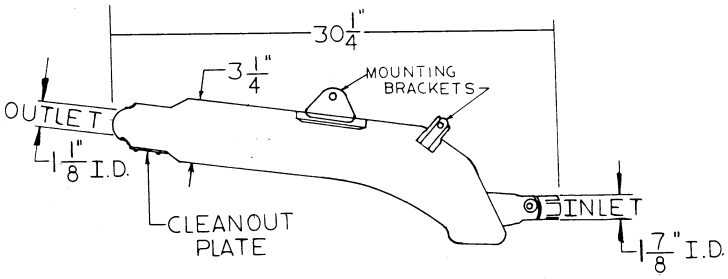

504

HONDA-KRIZMAN *(continued)*

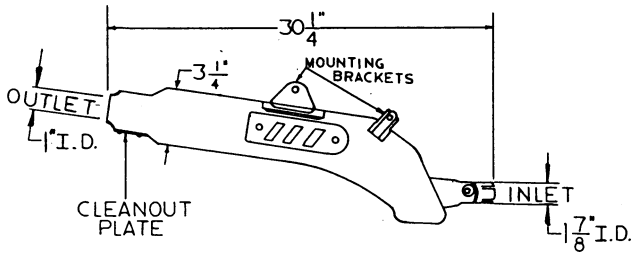

505

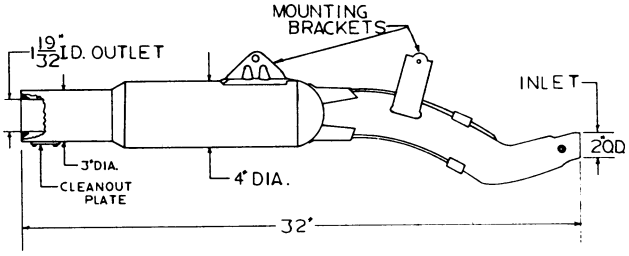

506

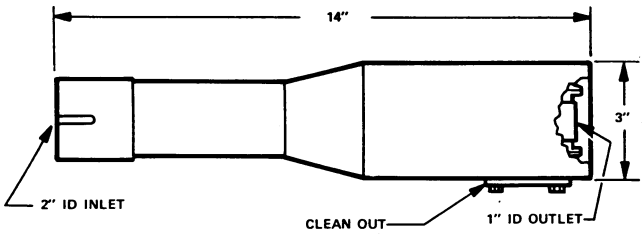

507

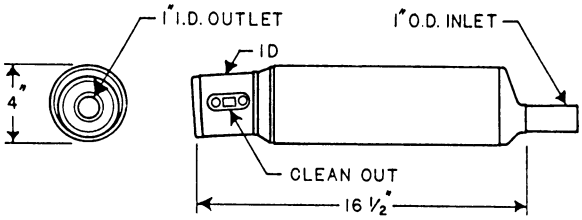

508

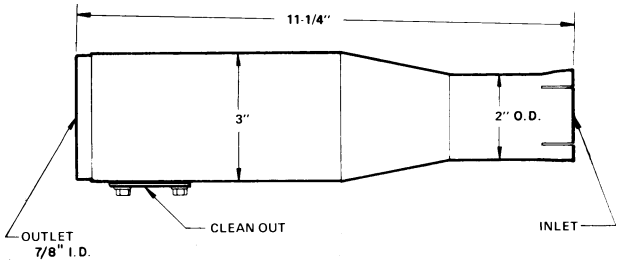

509

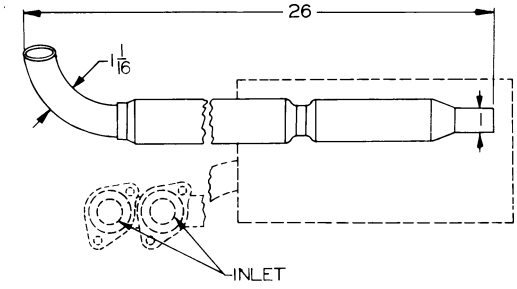

600

HONDA-KRIZMAN *(continued)*

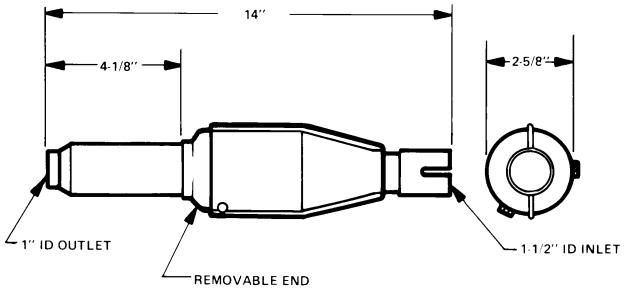

601

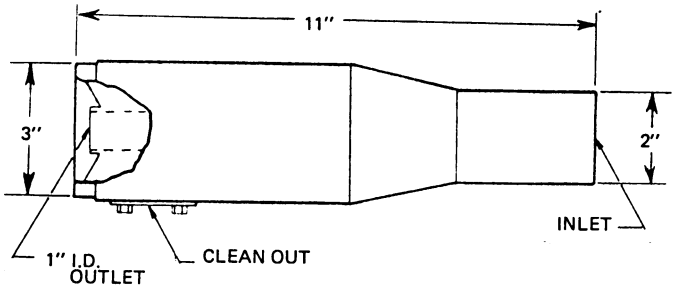

700

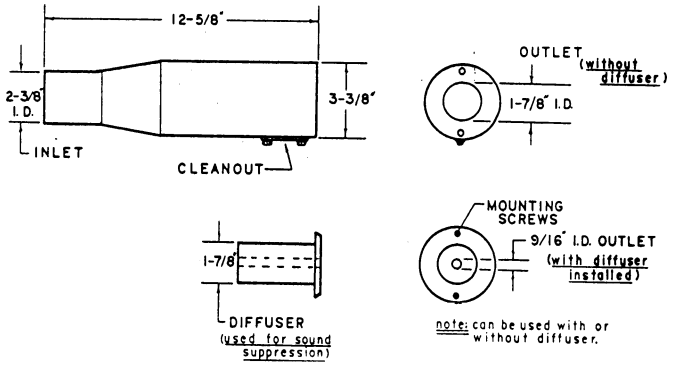

701

HONDA-NELSON/HOOKER

HONDA-NELSON *(continued)*

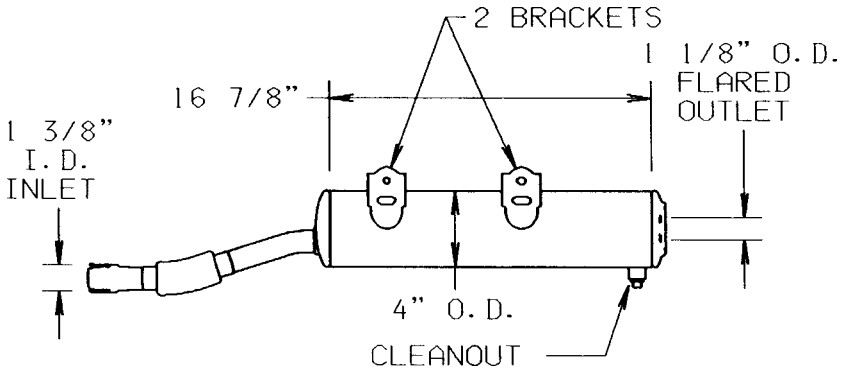

Honda-Nelson 26296

HOOKER

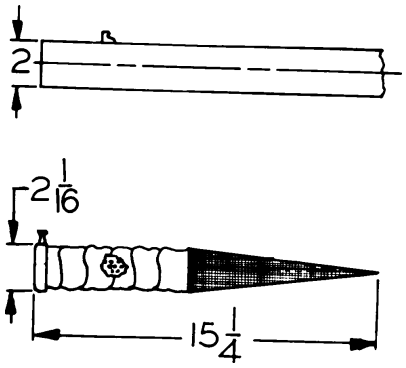

26281

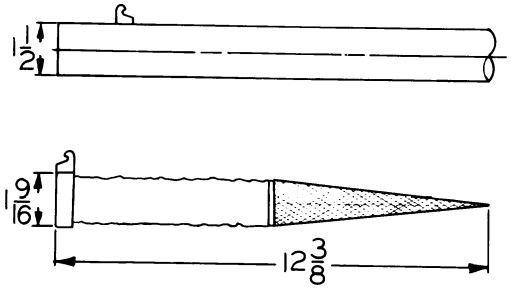

26282

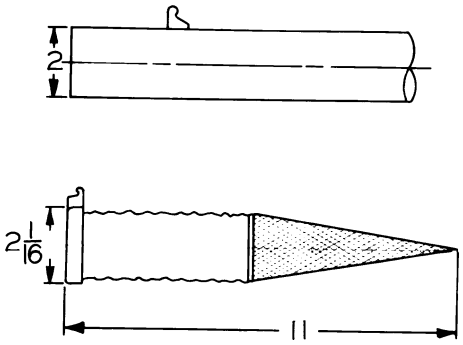

26283

HORTZMAN-KRIZMAN/HUSQVARNA

HORTZMAN-KRIZMAN

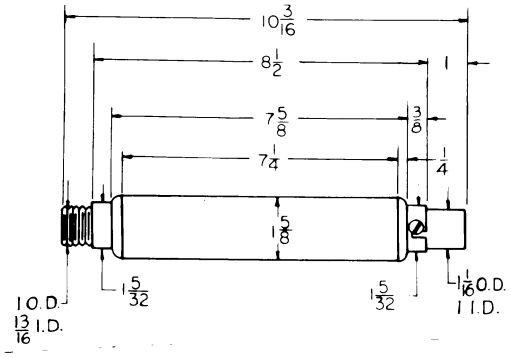

HE*

*** Type A thru E provide various inlet dimensions and shapes.**

HUSQVARNA

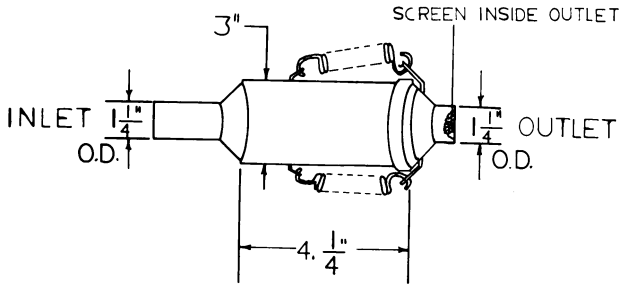

F15-1041

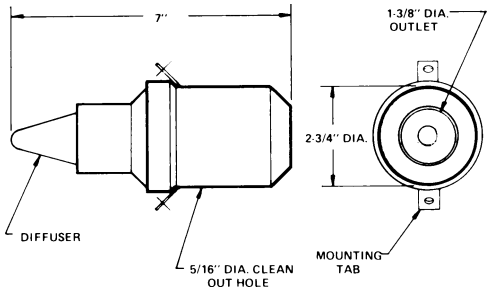

KS 500D

HUTCHINS FREFLO/IHC/J & R KRIZMAN

HUTCHINS FREFLO

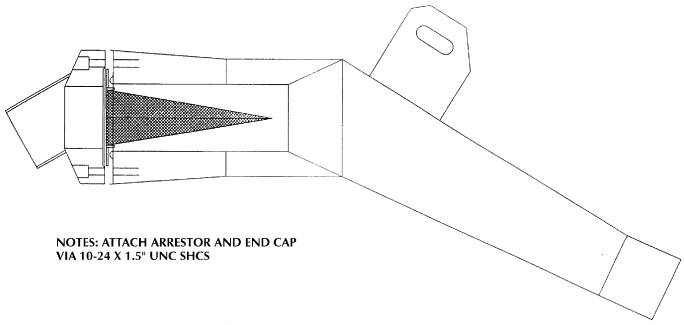

CYCLE GEAR #1

IHC

FOR IHC	70769C1	SEE NELSON	T-12818
FOR IHC	829640C91	SEE NELSON	T-13994
FOR IHC	561217C92	SEE NELSON	T-13651
FOR IHC	677817R91	SEE NELSON	T-10374
FOR IHC	563507C91	SEE NELSON	T-14005
FOR IHC	829176C91	SEE NELSON	T-14009

J & R KRIZMAN

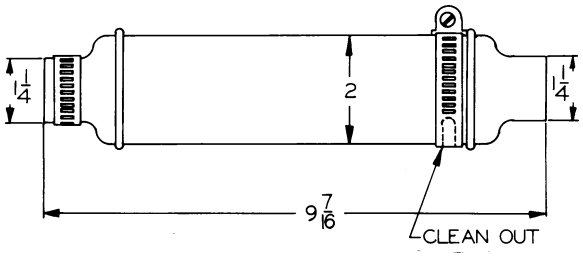

KS 350

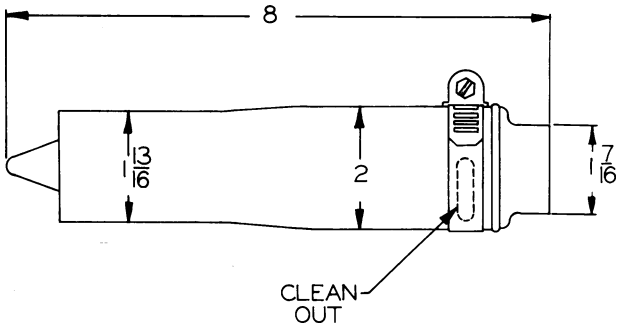

KS 500 A&C

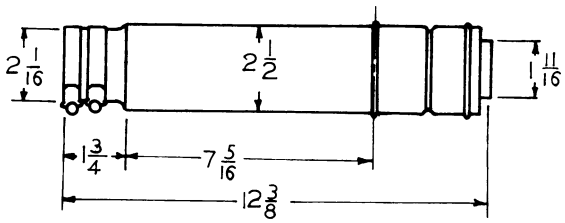

KS 650

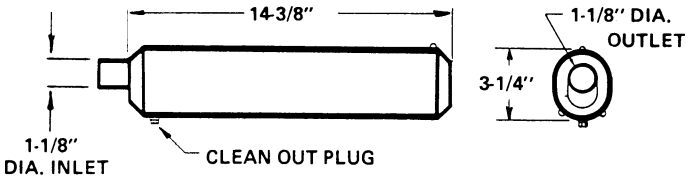

KS 650-O

J & R KRIZMAN *(continued)*

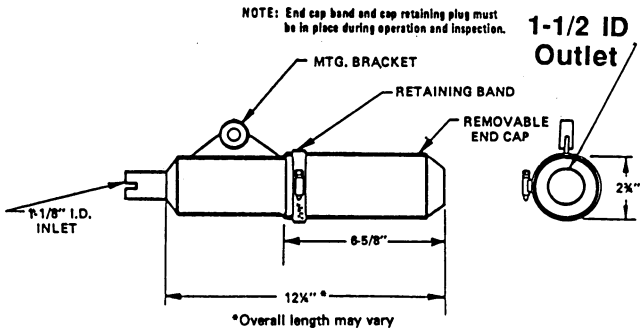

KS 650-A

KS 650-C—KS 650-A in oval muffler

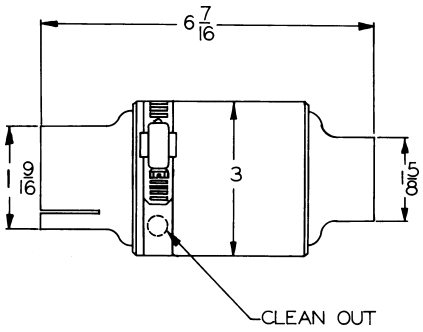

KS 650V

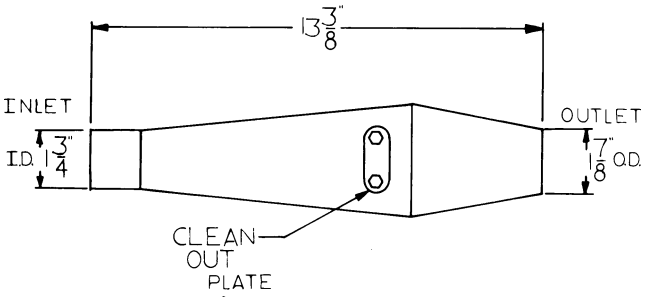

KS 800

J.G. MINTER & SONS/JOHN DEERE/KAWASAKI

J.G. MINTER & SONS

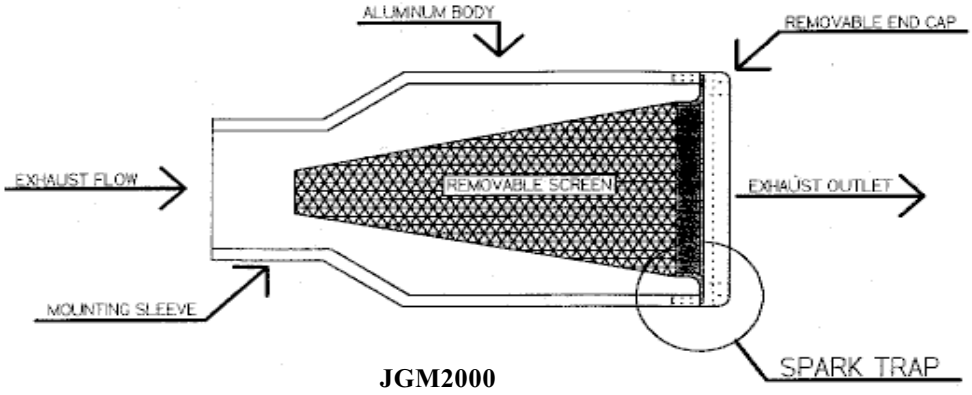

JGM2000

JOHN DEERE

FOR	**JOHN DEERE AH-75693**	**SEE NELSON T-10213**
FOR	**JOHN DEERE AH-75694**	**SEE NELSON T-10214**
FOR	**JOHN DEERE AH-75695**	**SEE NELSON T-10215**
FOR	**JOHN DEERE AH-80388**	**SEE NELSON T-11145**
FOR	**JOHN DEERE AH-84965**	**SEE NELSON T-12499**
FOR	**JOHN DEERE AH-87289**	**SEE NELSON T-11927**
FOR	**JOHN DEERE AT-32701**	**SEE NELSON T-10968**
FOR	**JOHN DEERE AT-33686**	**SEE NELSON T-9605**

KAWASAKI

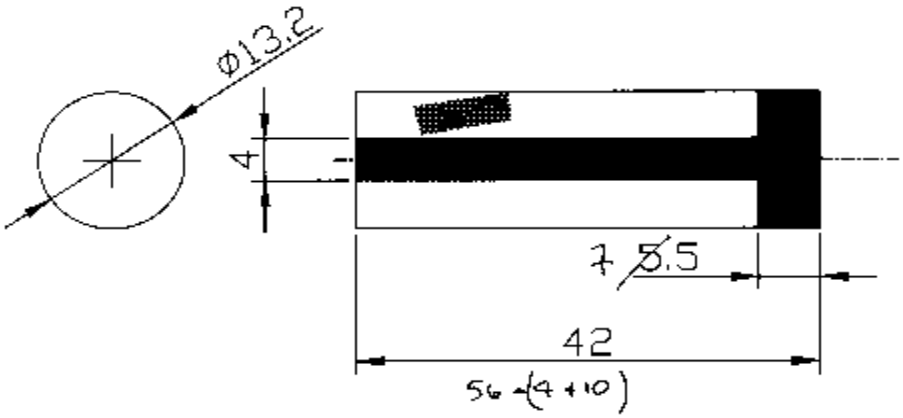

18077-2110

KAWASAKI *(continued)*

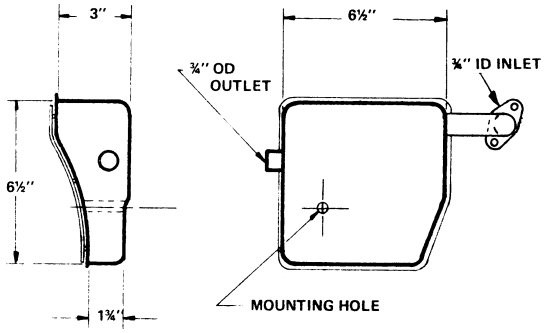

3951/2

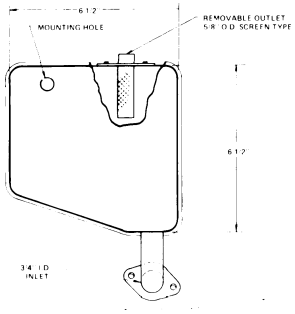

3951/2A

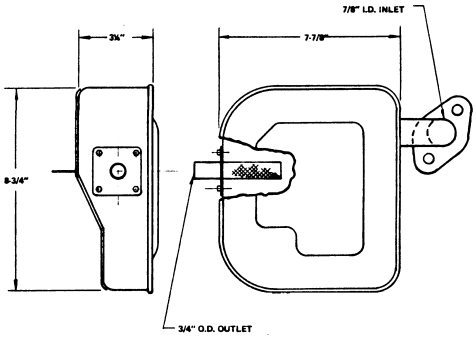

3964/5/6

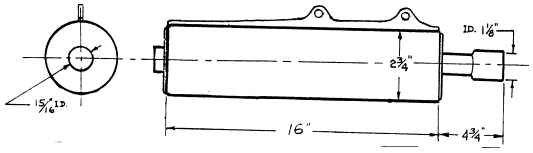

DX 200

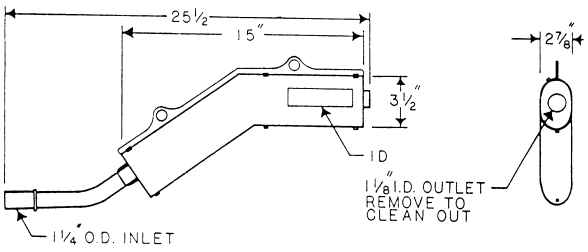

DX 250D

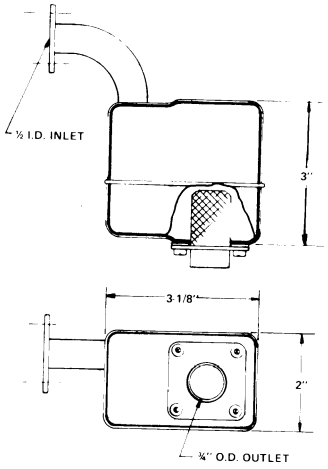

FA76D

KAWASAKI *(continued)*

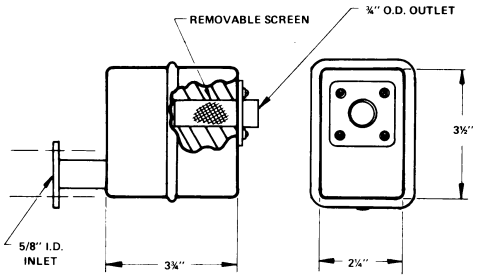

FA130D

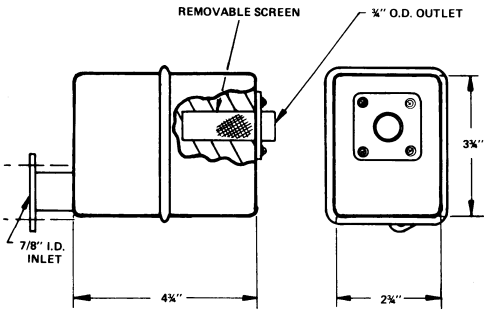

FA210D

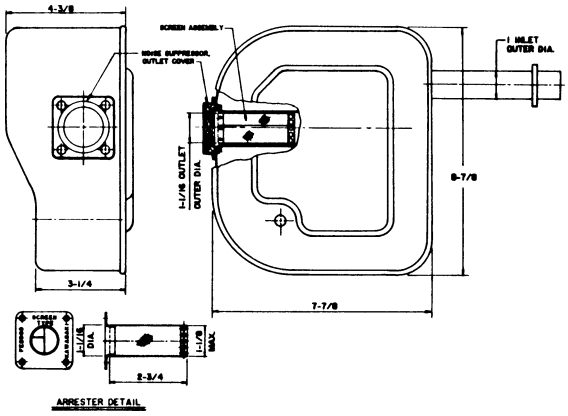

FE290D

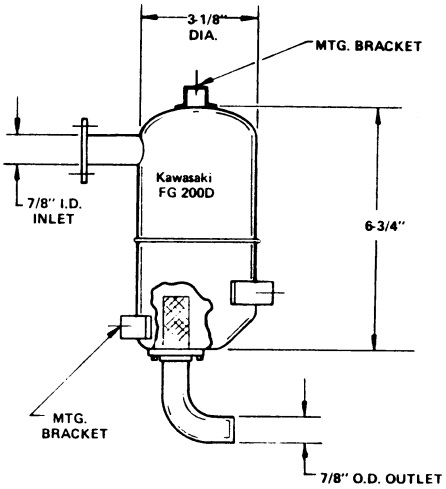

FG200D

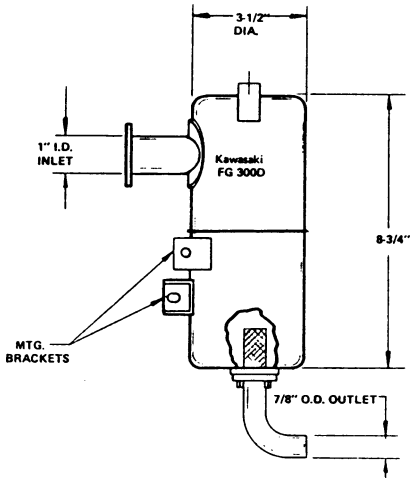

FG300D

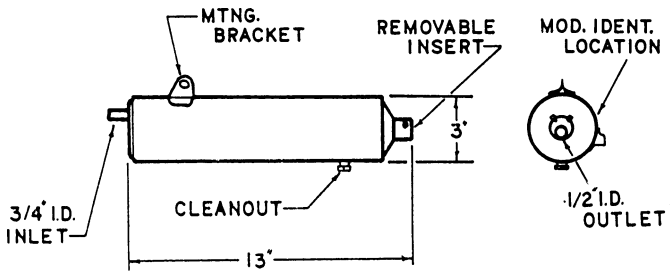

KD080N2

KAWASAKI *(continued)*

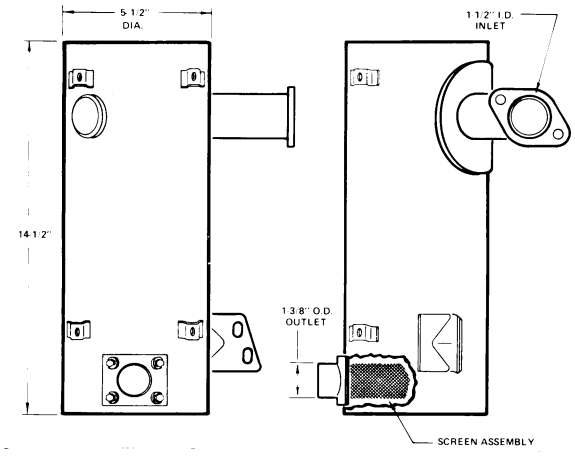

KF-150

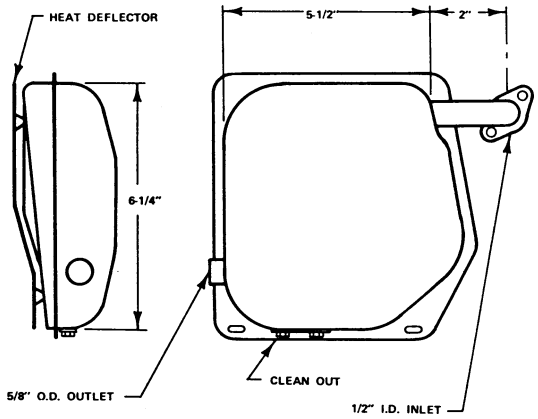

KG-550

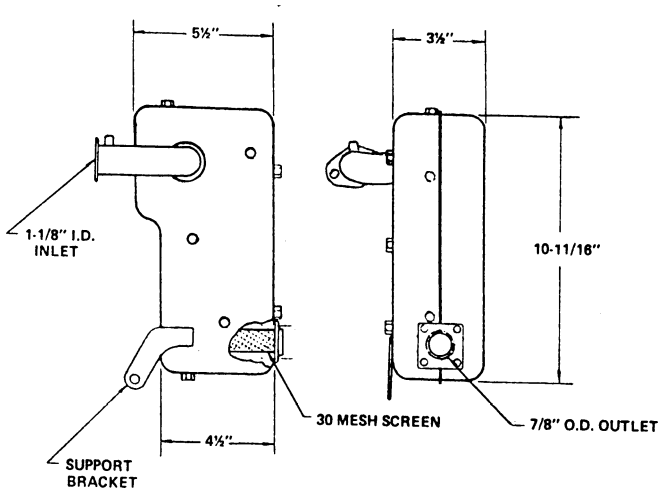

KG-4000

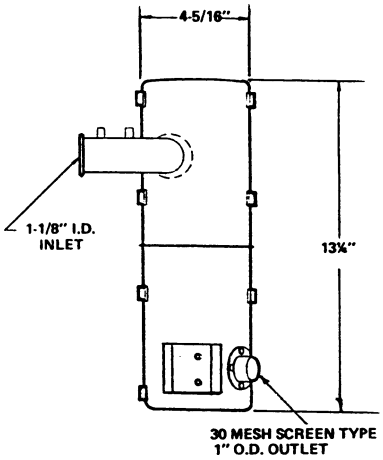

KG-5000

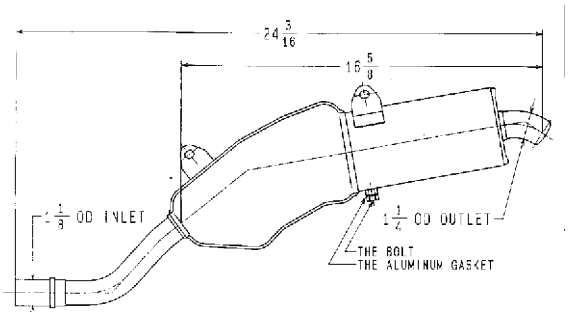

KHI DX200H

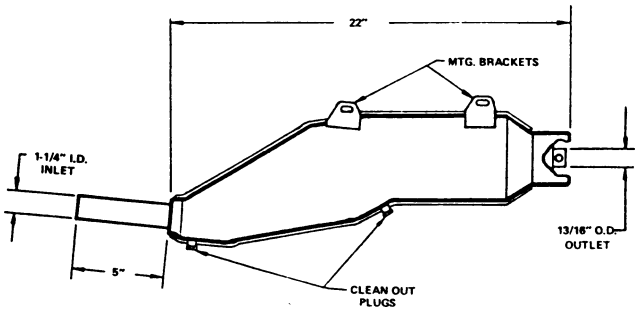

KHI KL250

KAWASAKI *(continued)*

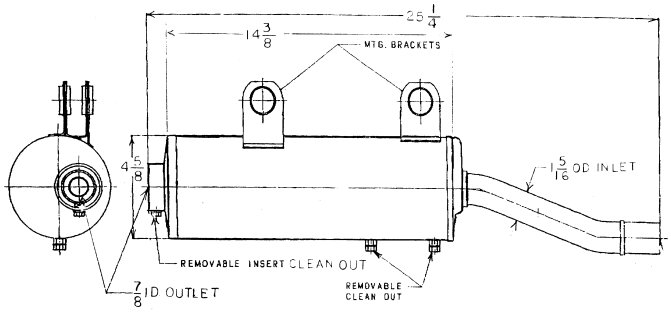

KHI LF 400

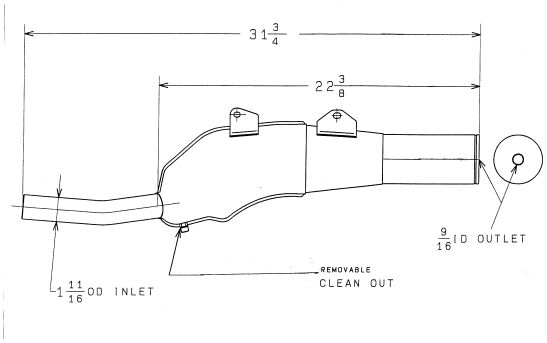

KHI LX 650

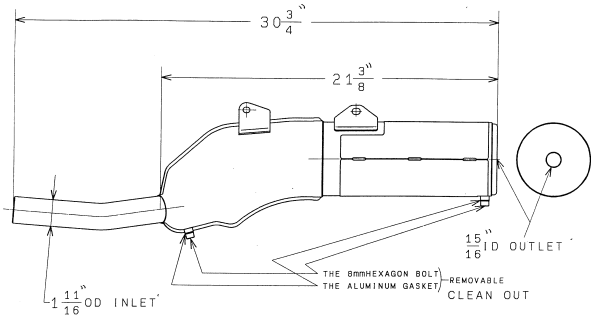

KHI LX 650C

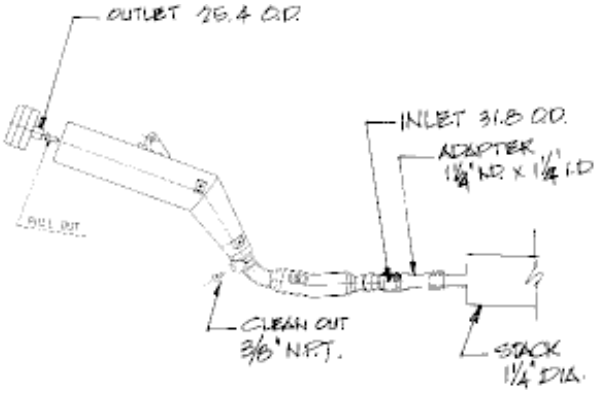

KL 250G

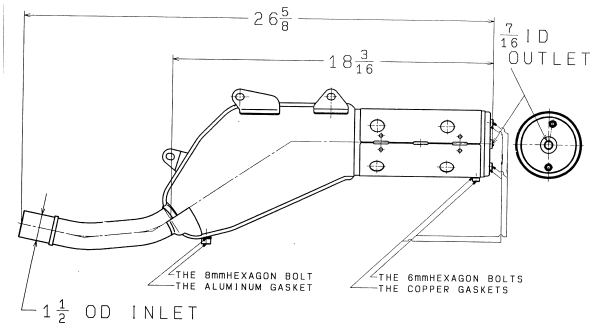

KLX 250D

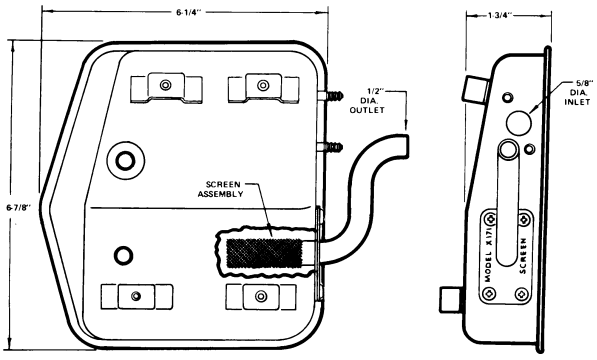

X171

KAWASAKI/KAWKAWASAKI-KRIZMAN

KAWASAKI *(continued)*

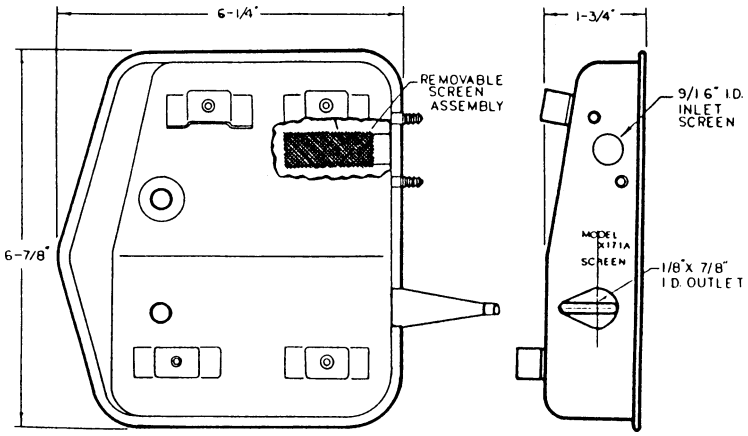

X171A

KAWASAKI-KRIZMAN

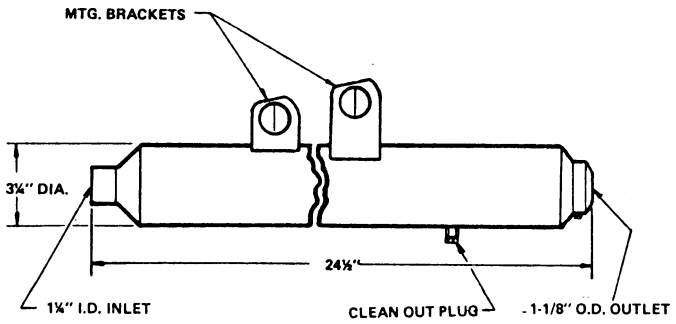

DX-250

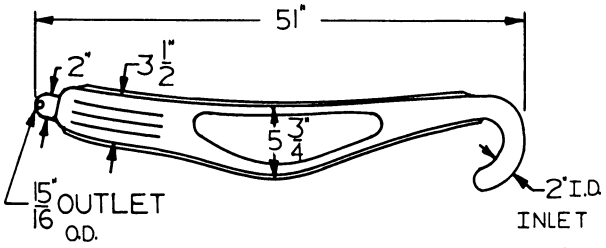

KD-400

KAWASAKI-KRIZMAN *(continued)*

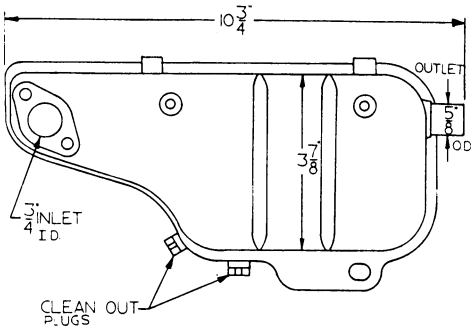

KG-250

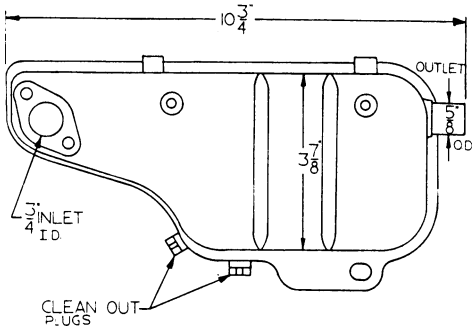

KG 250A

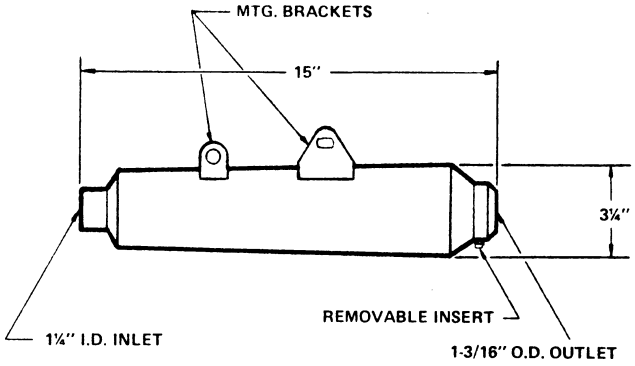

KG 250C

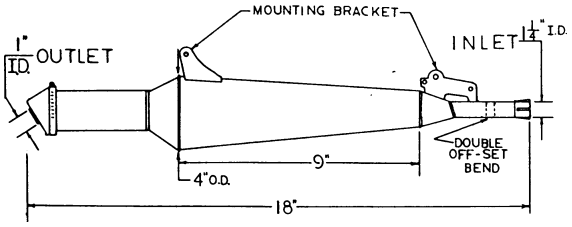

KHI-KE250B

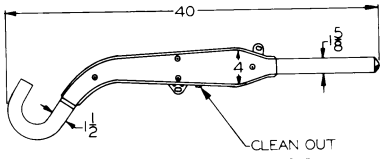

KS-250

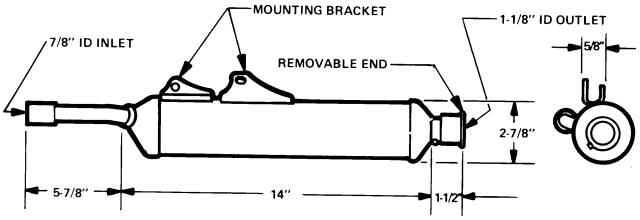

KS-350 KHI DX080A

KAWASAKI-KRIZMAN *(continued)*

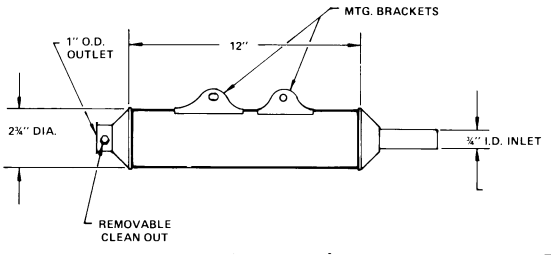

KS-350 KHI DX080C

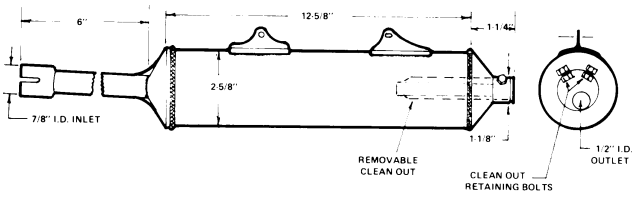

KS-350 KHI DX080C1

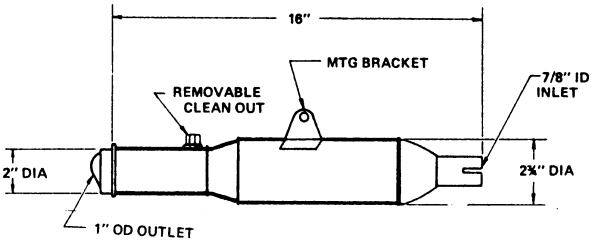

KS-500 KDX 175

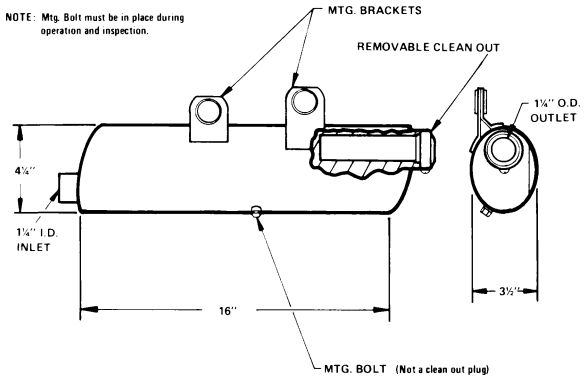

KS-500 KHI DX200A

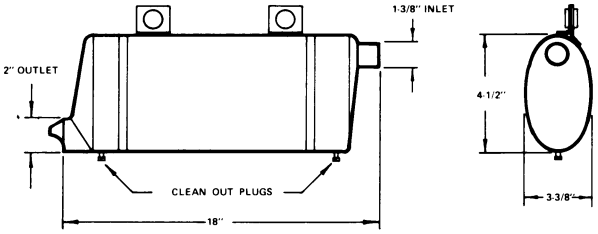

KS-500 KHI DX200C

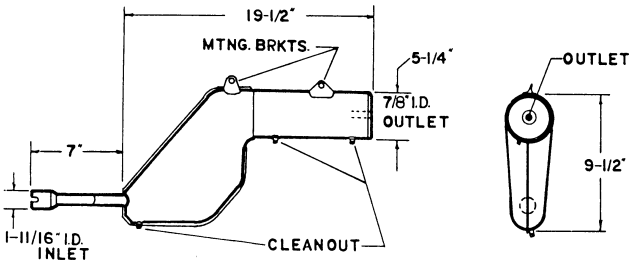

KS-500 KHI KL65

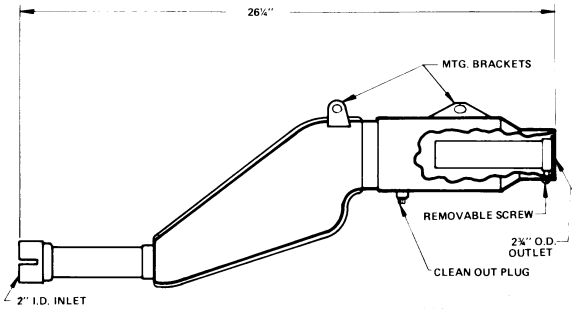

KS-500 KHI KL600

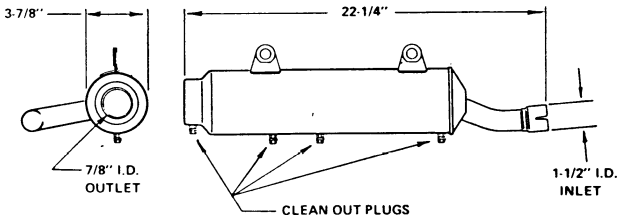

KS-500 KHI KSF250

KAWASAKI-KRIZMAN *(continued)*

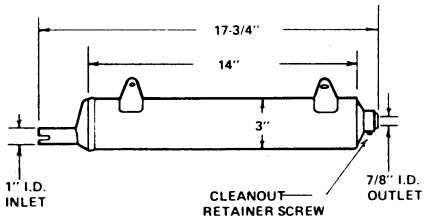

KS-500 KHI LF110

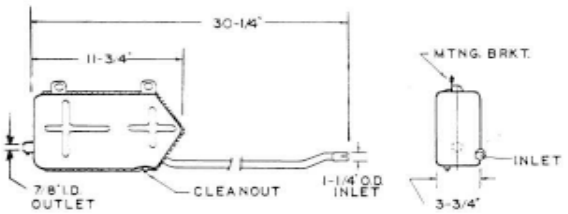

KS-500 KHI LF220

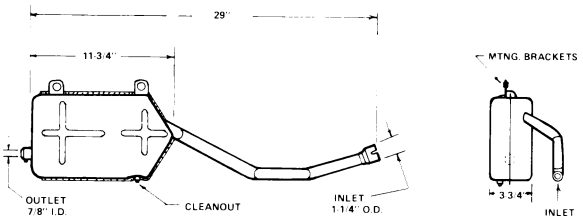

KS-500 KHI LF300C

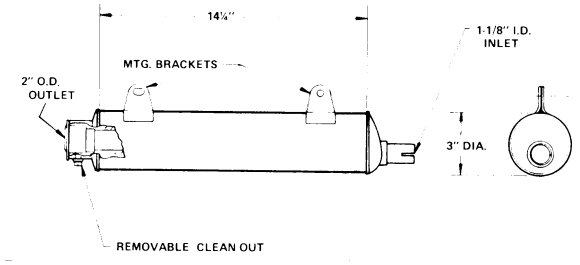

KS-500 KHI LT110A
KS-500 KHI LT160

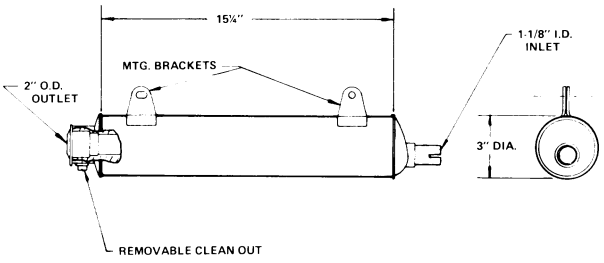

KS-500 KHI LT 250A

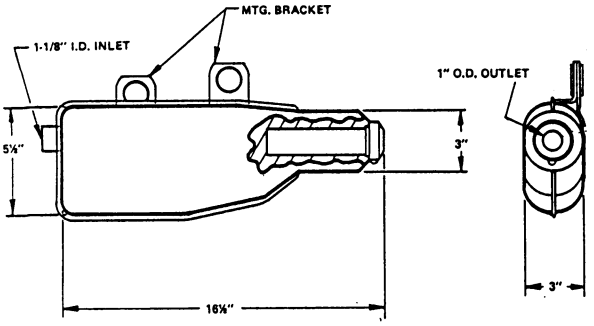

KS-500 KHI XT250

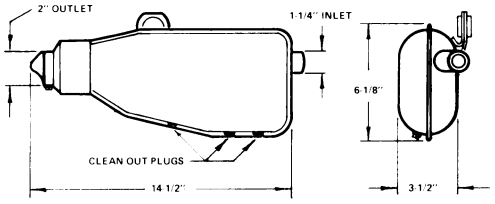

KS-500 KHI XT250B2

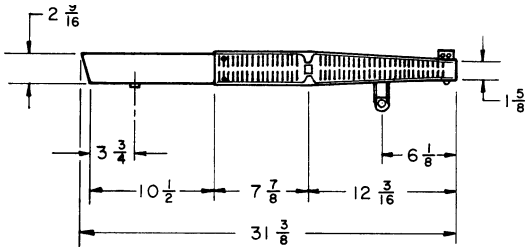

YS-80

KEEN PERCEPTIONS/KERKER-KRIZMAN/KITTEL

KEEN PERCEPTIONS

No diagrams available:
Refer to General Purpose Qualification Table at end of section for rating.

KERKER-KRIZMAN

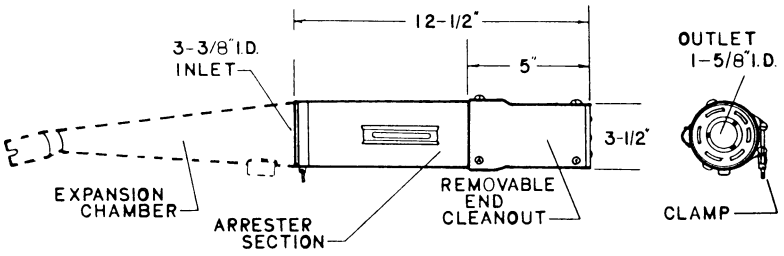

KS-650K

KITTEL

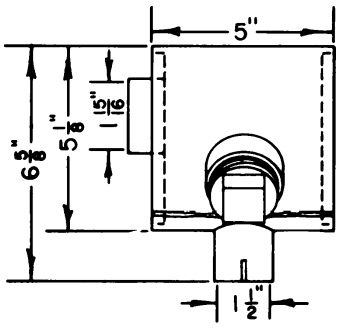

S-1 1/2A

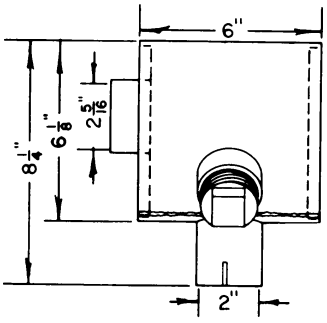

S-2A

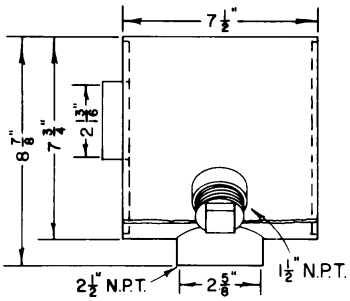

S-2 1/2A

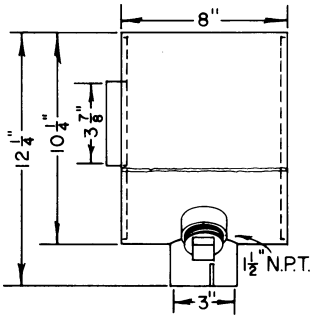

ALSO AVAILABLE WITH
3" FEMALE PIPE INLET

S-3

KITTEL *(continued)*

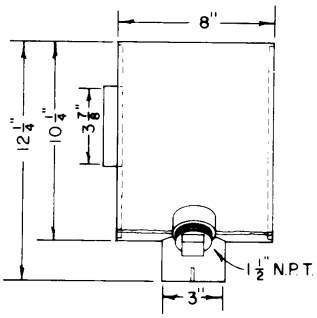

S-3A

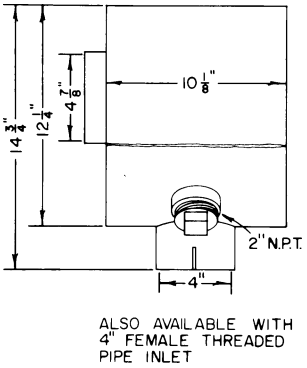

S-4

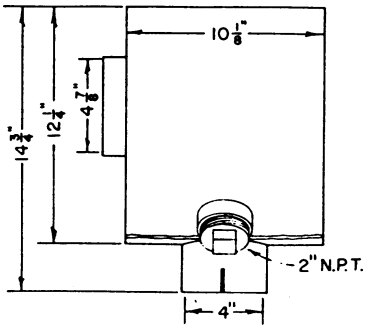

S-4A

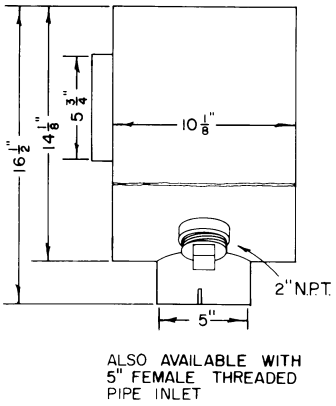

S-5

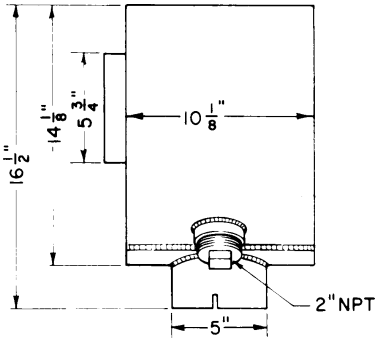

S-5A

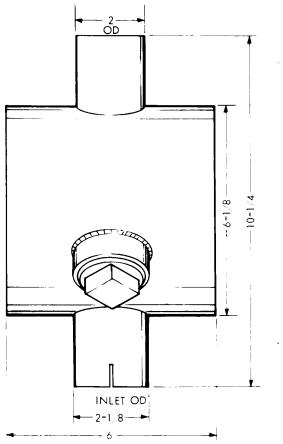

S-T-2

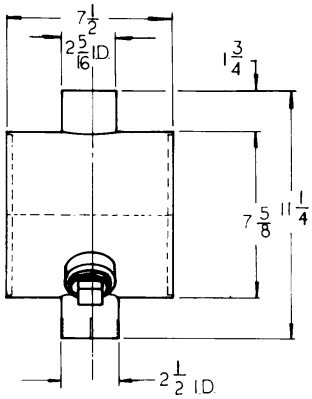

S-T-2-1/2

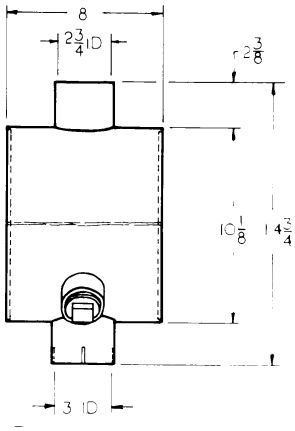

S-T-3

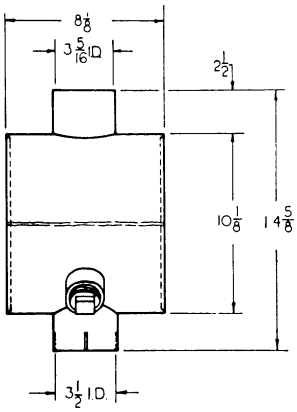

S-T-3-1/2

KITTEL/KOHLER

KITTEL *(continued)*

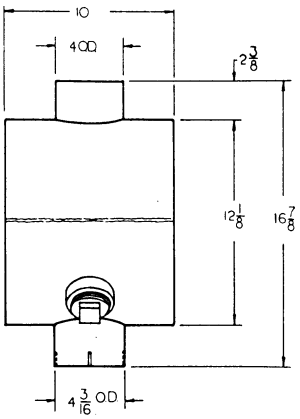

S-T-4

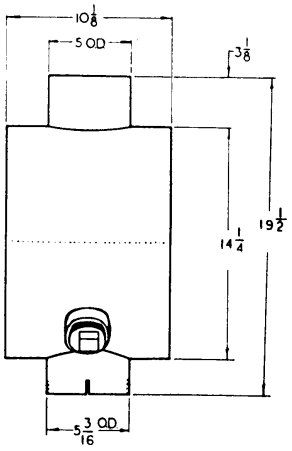

S-T-5

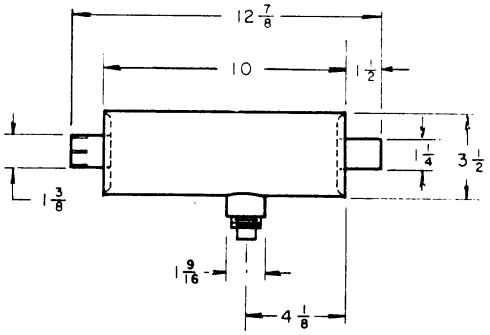

3510-SA 1-1/4

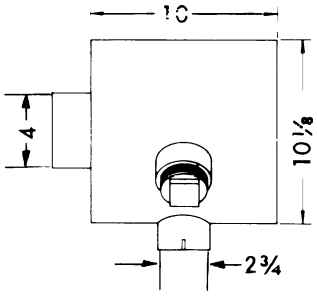

1010 HT

KOHLER

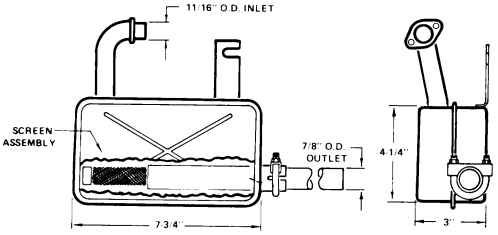

228218

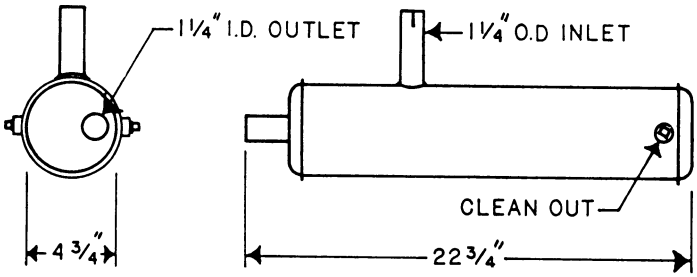

Kohler 239724
Nelson 22755

For Kohler 278402—see modified Kohler 278224 (body/arrester horizontal)
For Kohler 278403—see modified Kohler 278224 (body/arrester horizontal)
For Kohler 278416—see modified Kohler 278223 (body/arrester horizontal)

KOHLER *(continued)*

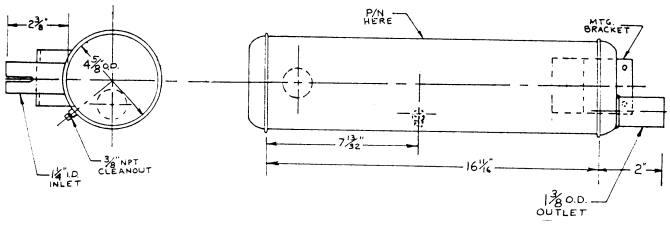

278189

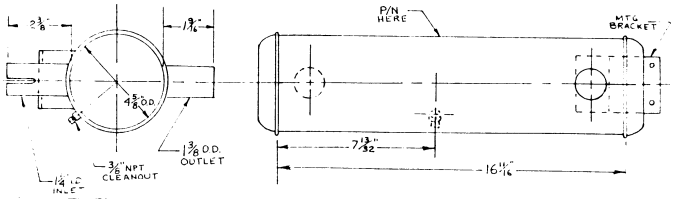

278218

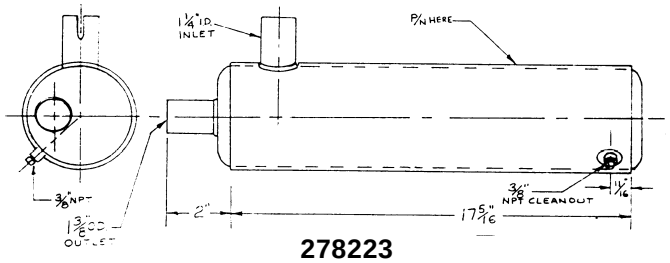

278223

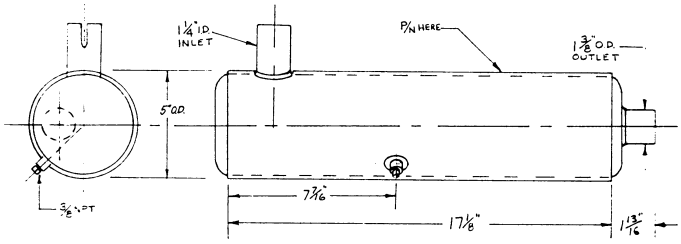

278224

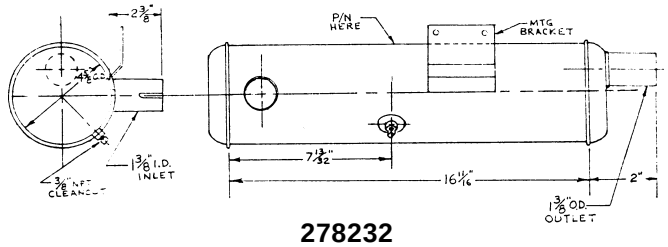

278232

KRIZMAN/KTM

KRIZMAN

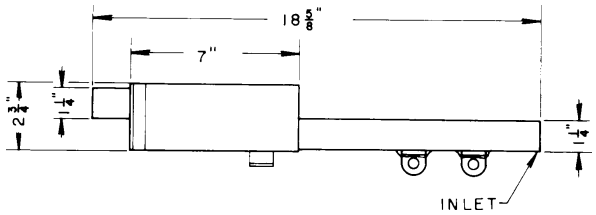

II-5H.34B

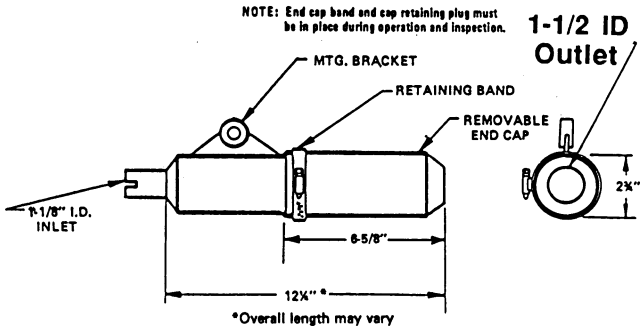

KS 650A

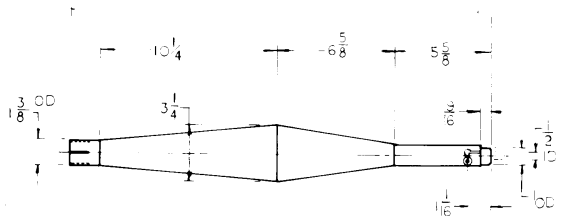

T-H100
T-H100M

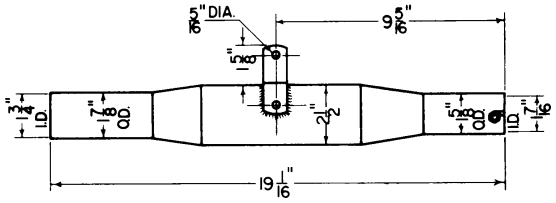

V-H1

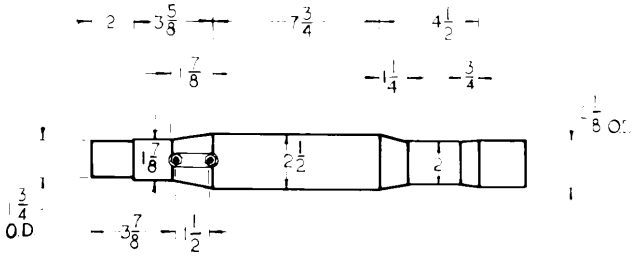

V-H11

KTM

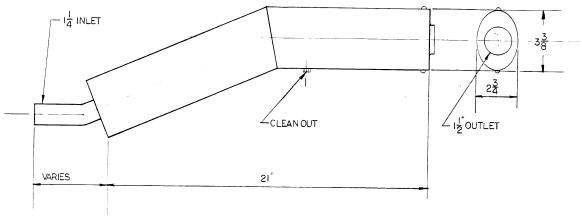

KTM K-300

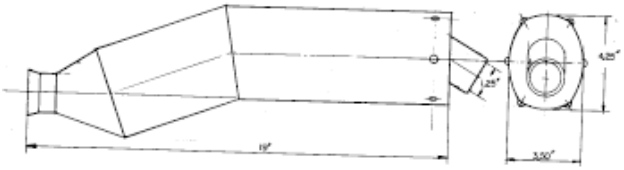

KTM K-620

KUBOTA

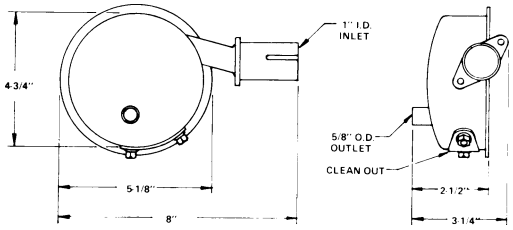

8501A

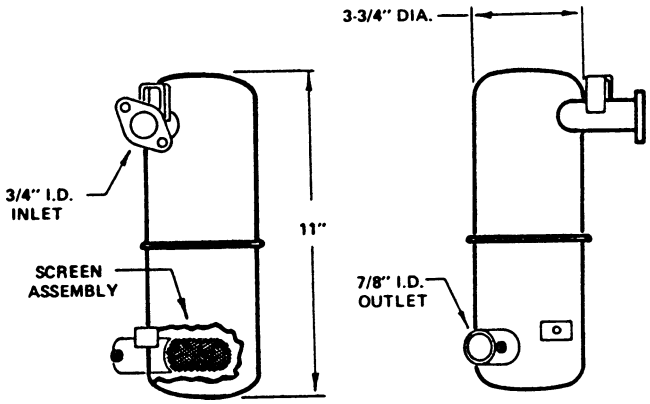

8502C

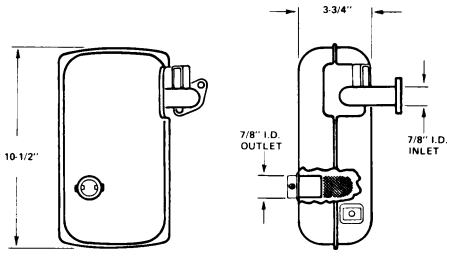

8503C

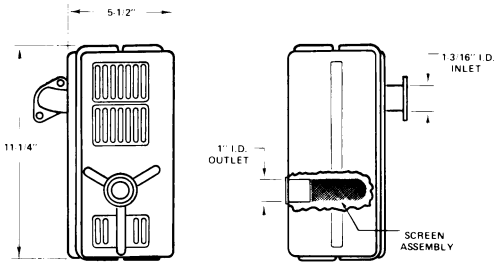

8504C

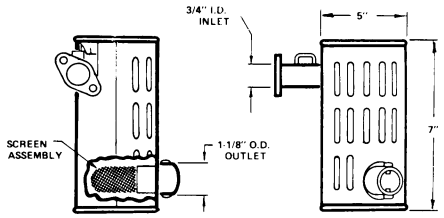

8505B

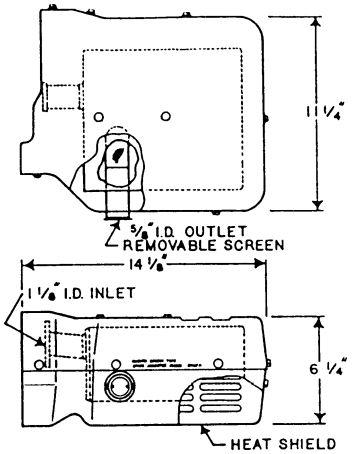

8906A

KUBOTA *(continued)*

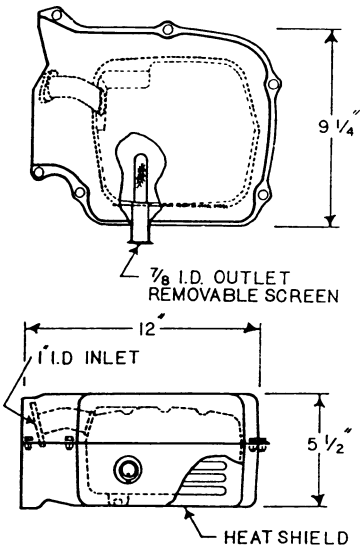

8907A

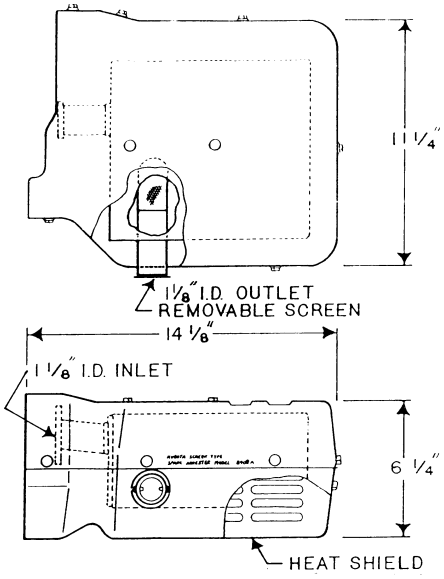

8908A

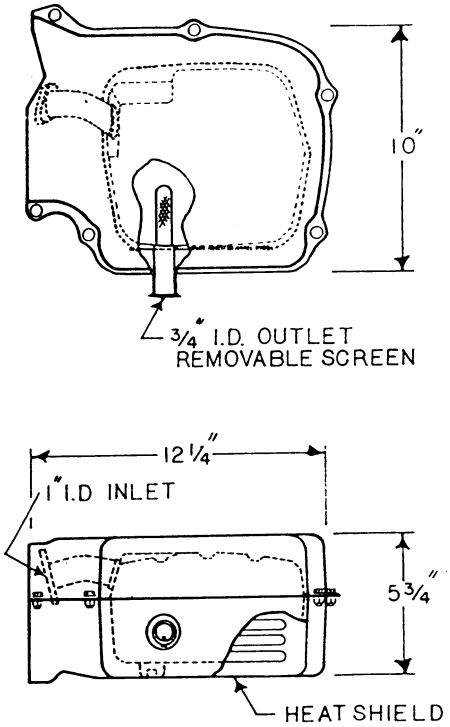

8909A

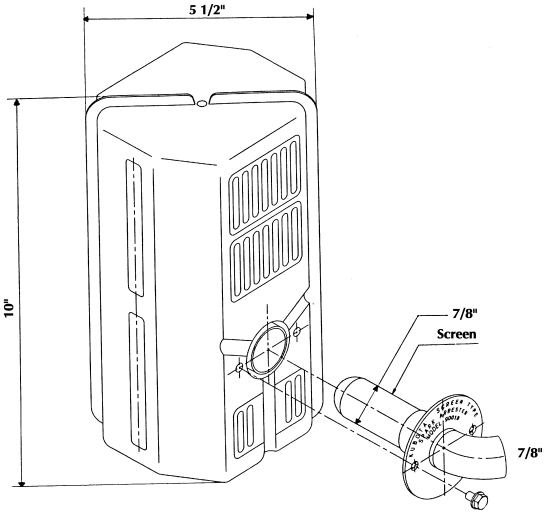

9001B

MAGNUM-KRIZMAN/MAGNUM RACING/MAREMONT

MAGNUM-KRIZMAN

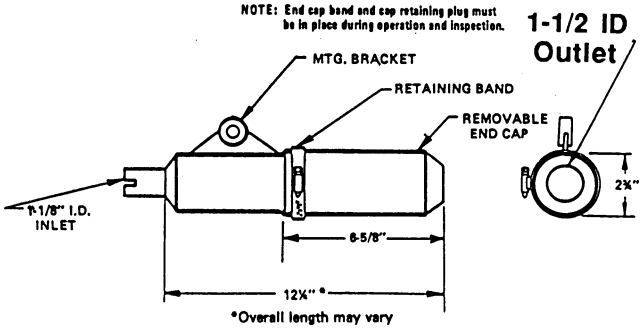

KS 650 A

MAGNUM RACING

No diagrams available:
Refer to General Purpose Qualification Table at end of section for rating.

MAREMONT ⊕

No diagrams available:
Refer to General Purpose Qualification Table at end of section for rating.

MAXIM/McCULLOCH

MAXIM

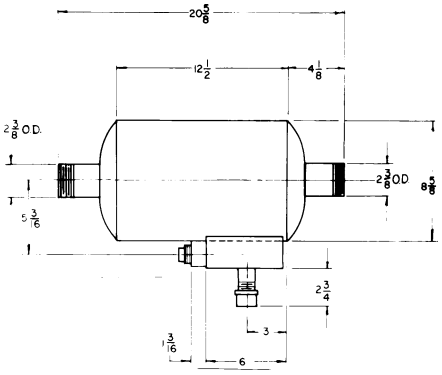

2" MSA1

McCULLOCH

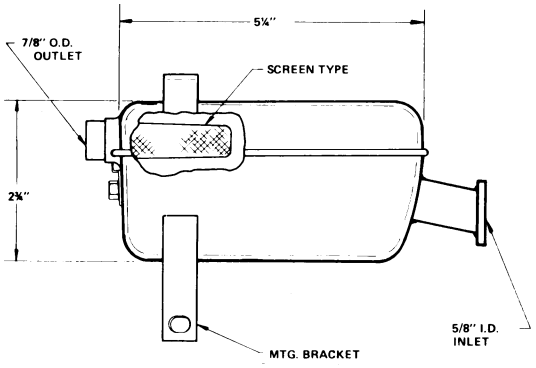

MPP 600E/800E

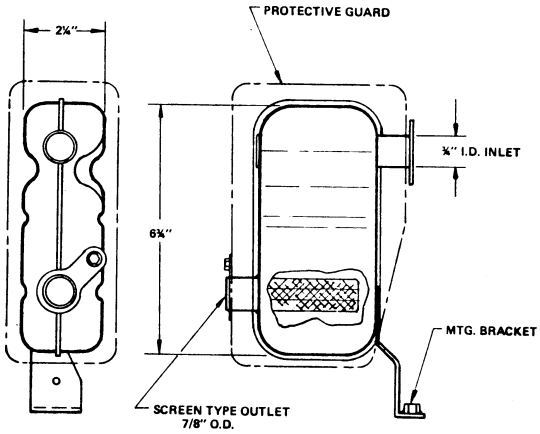

MPP 1500E

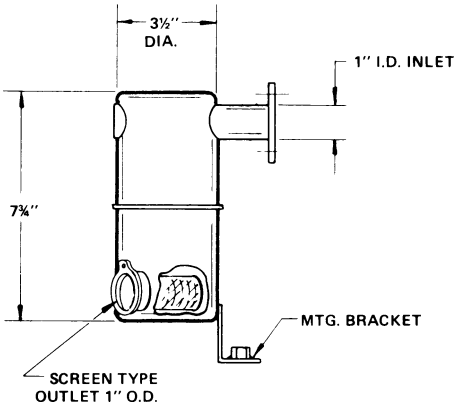

MPP 2300E

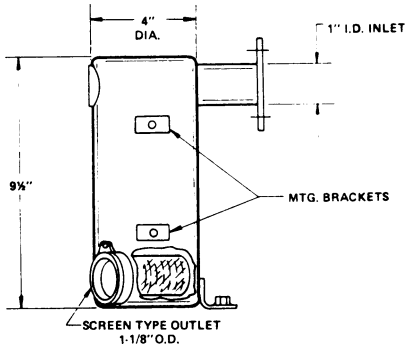

MPP 3500E

MURPHY/NELSON

MURPHY

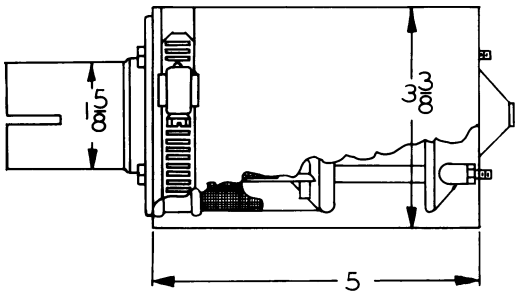

MM3S 2.5

NELSON

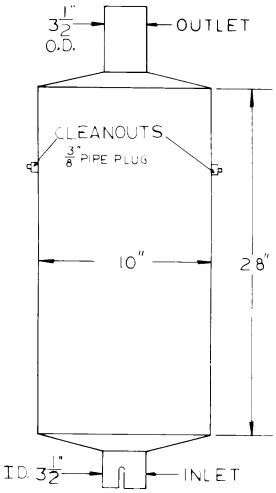

14110

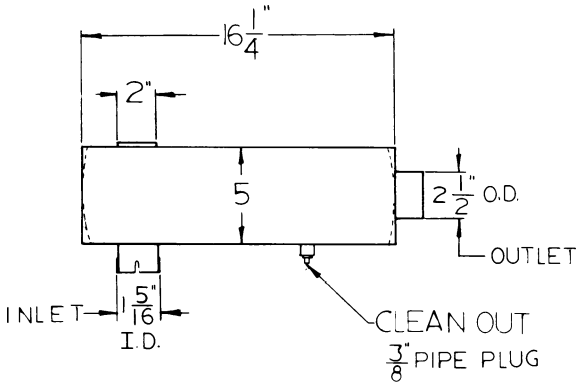

14113

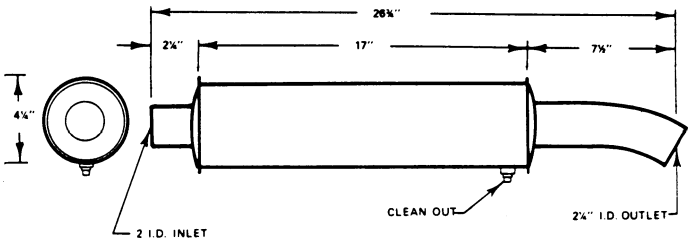

14217

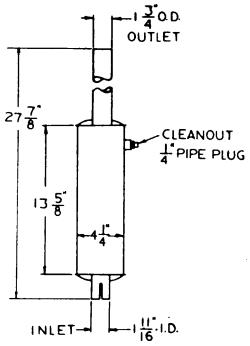

14390

NELSON *(continued)*

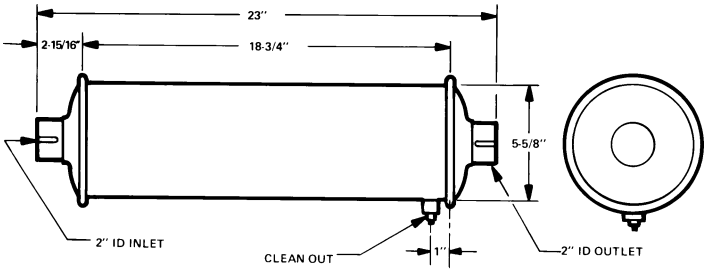

14572

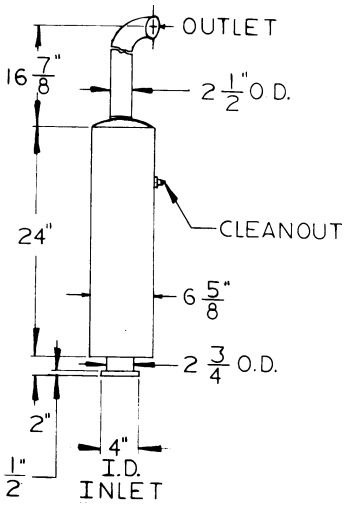

15064A

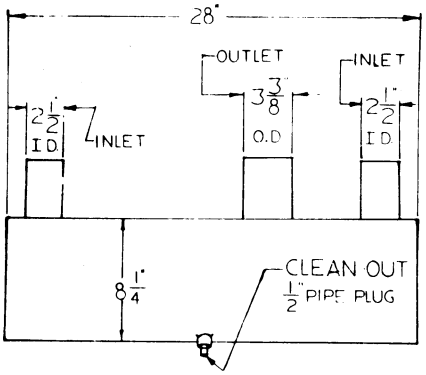

15514

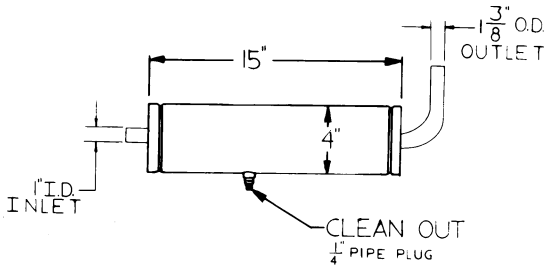

15567

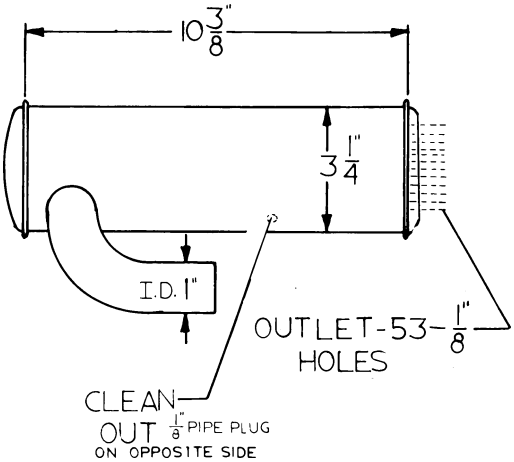

15730

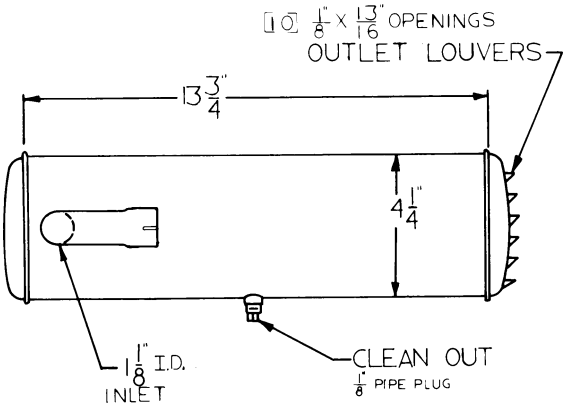

15731

NELSON *(continued)*

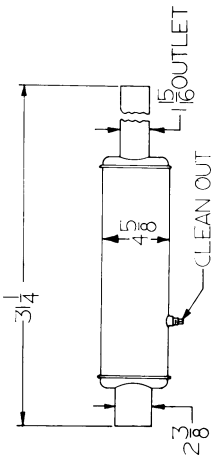

15818

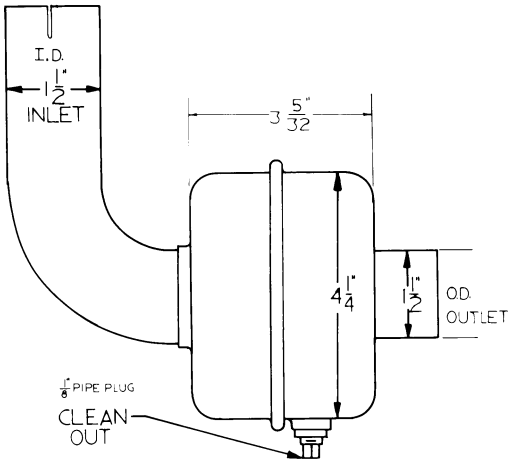

15870

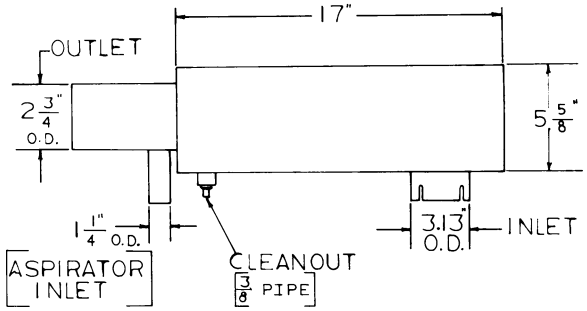

15876

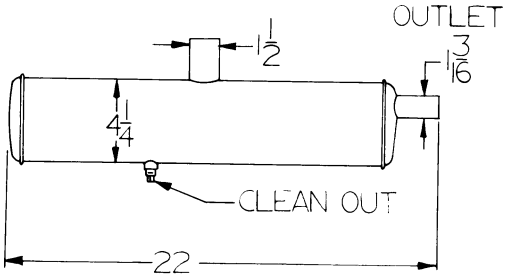

15893
ONAN 155-1520

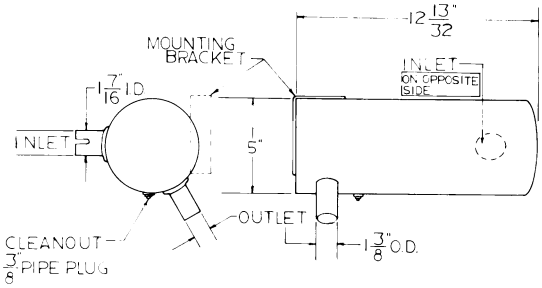

15934

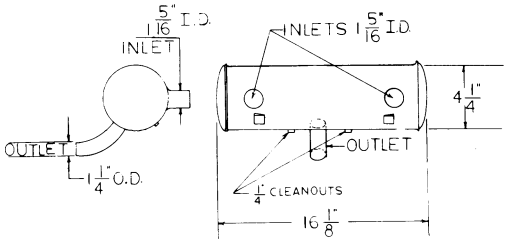

15935

NELSON *(continued)*

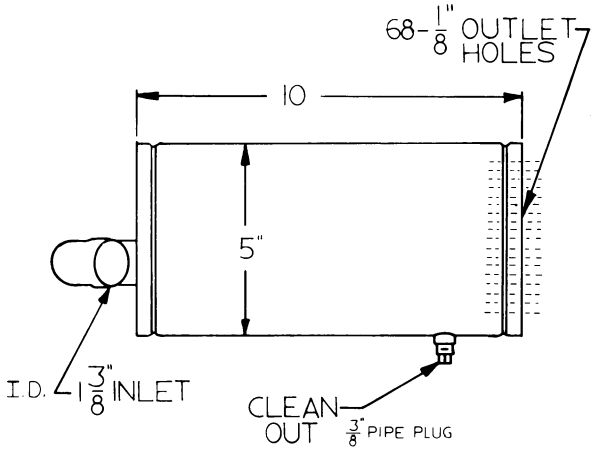

15982

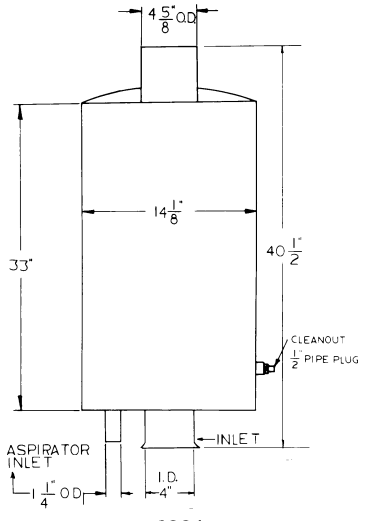

16001

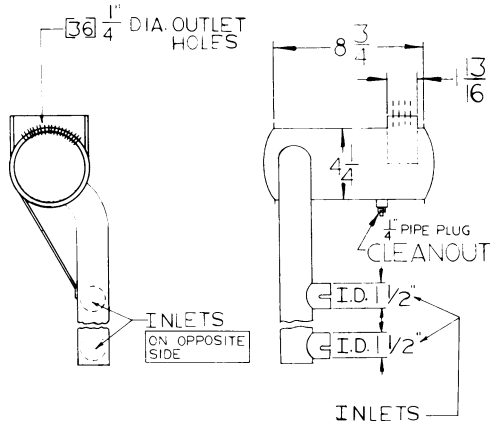

16006

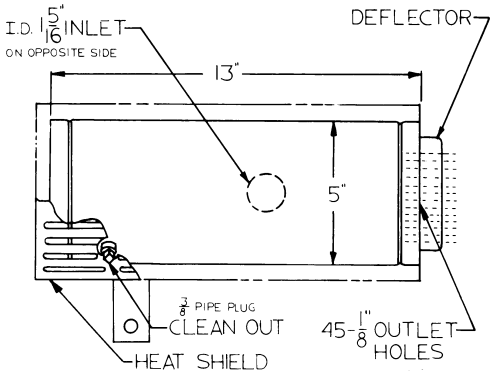

16011

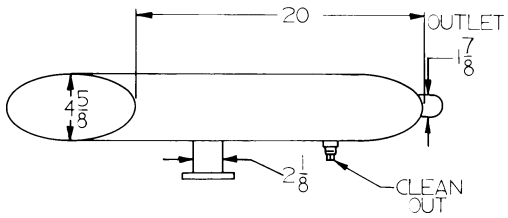

16025

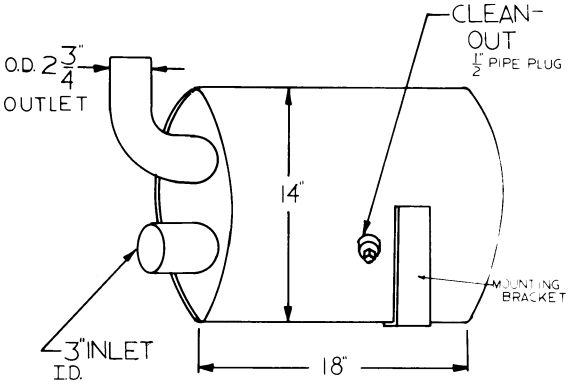

16068

NELSON *(continued)*

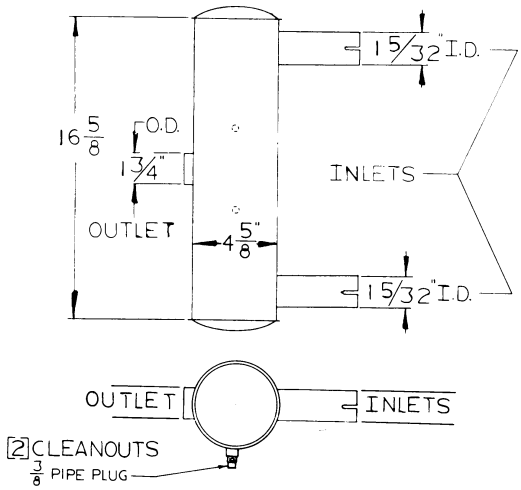

16152

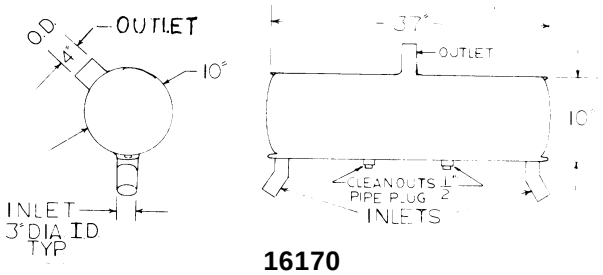

16170

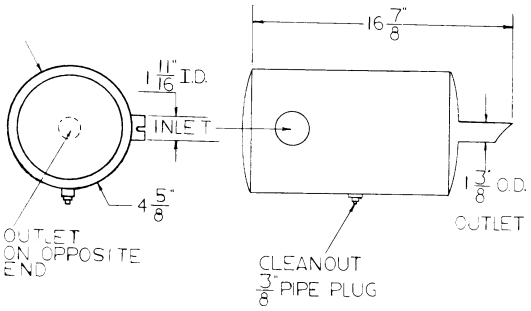

16297

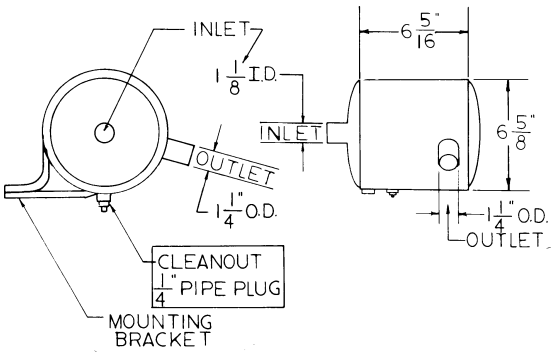

16300

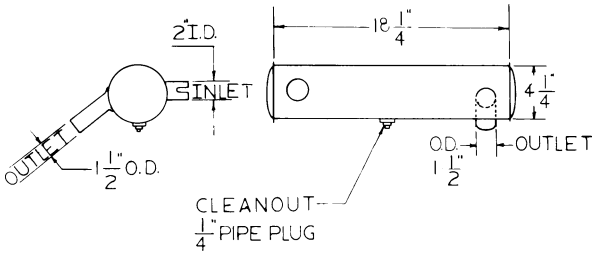

16301

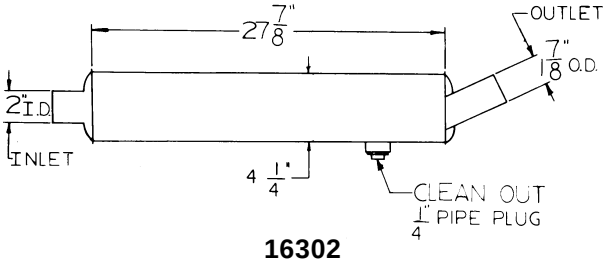

16302

NELSON *(continued)*

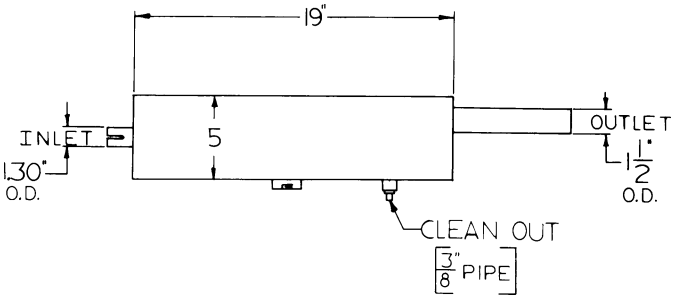

16304

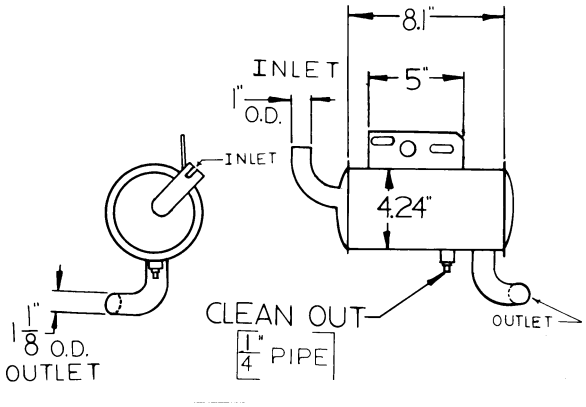

16361

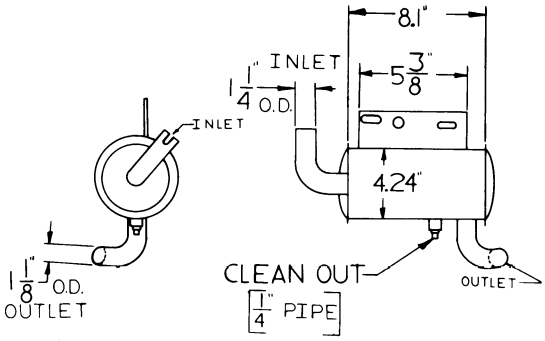

16362
22157

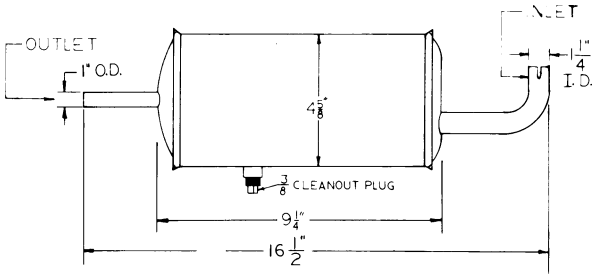

16460

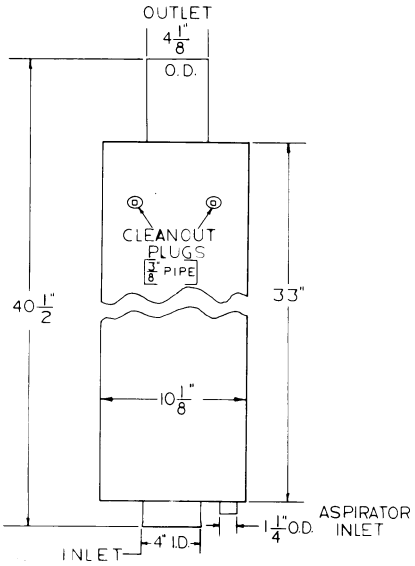

16504

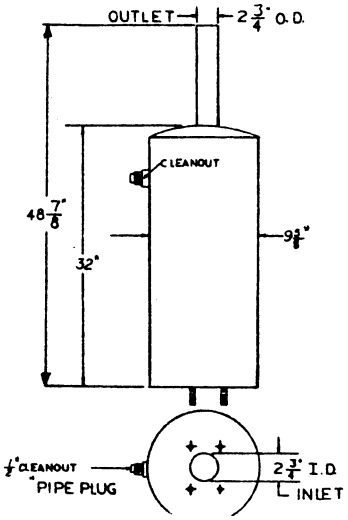

16506A

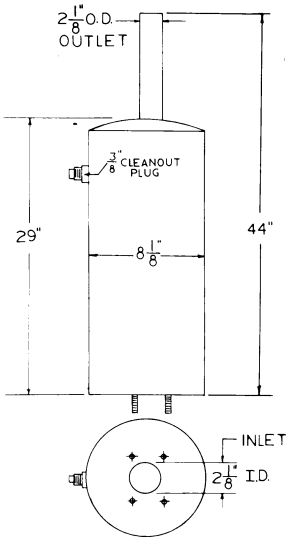

16507A

NELSON *(continued)*

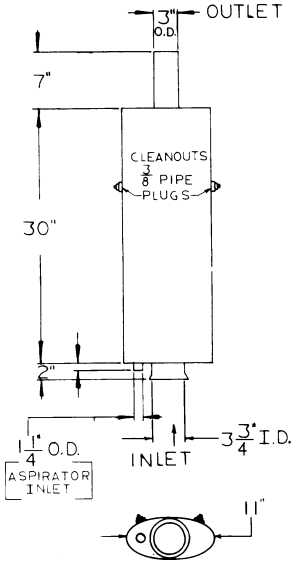

16538

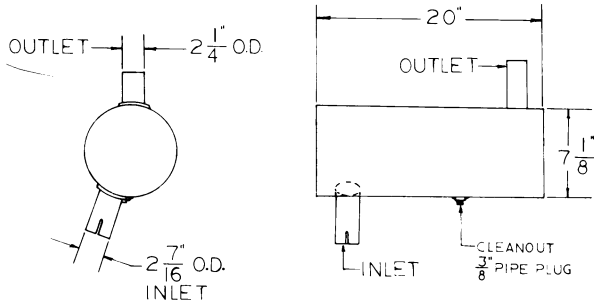

16547

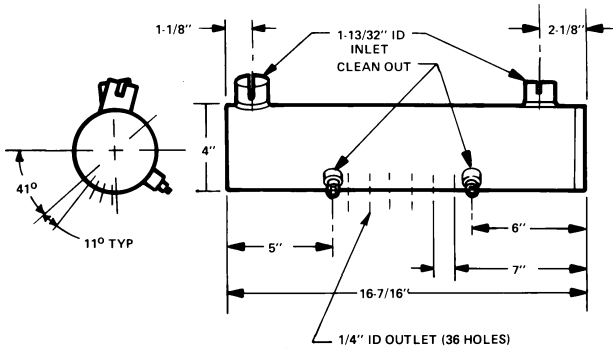

16572

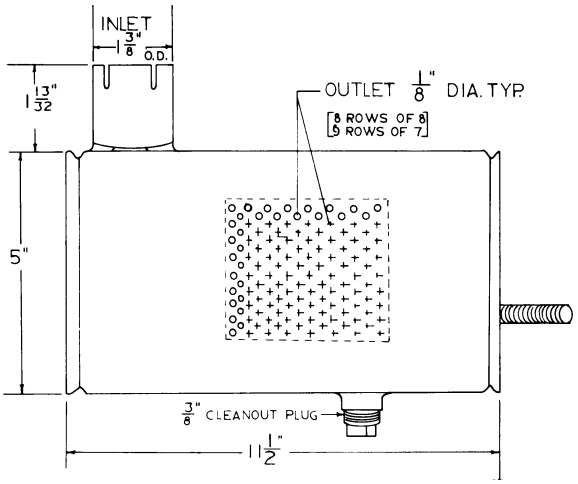

16619

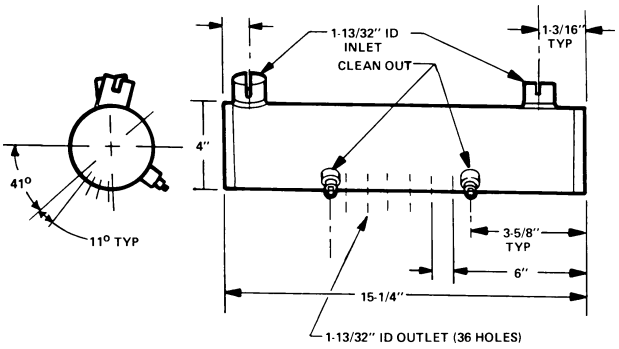

16628

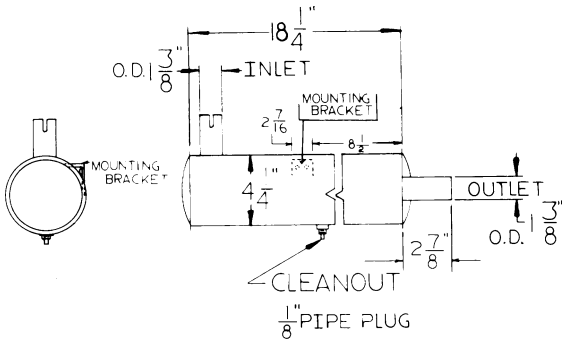

16667

NELSON *(continued)*

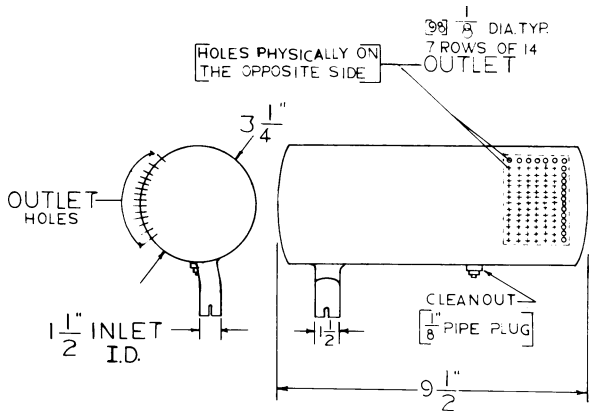

16752

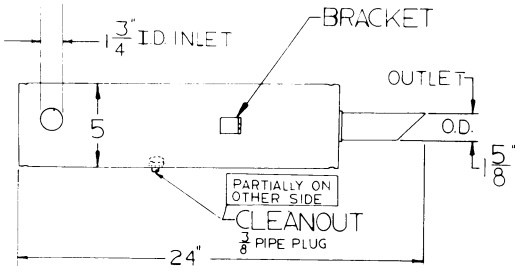

16825

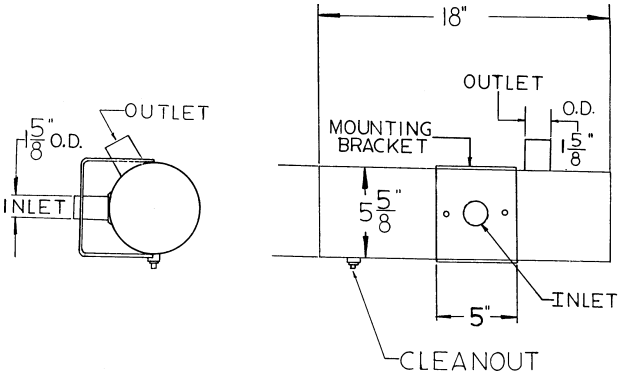

16828

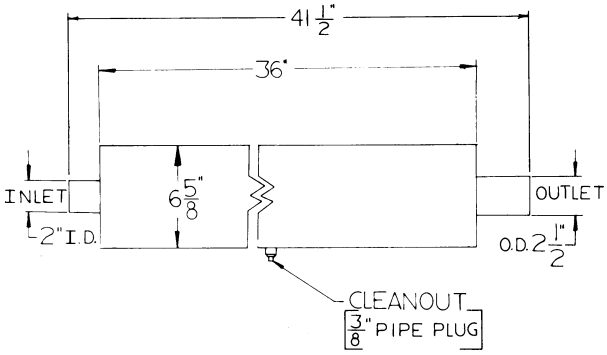

16868

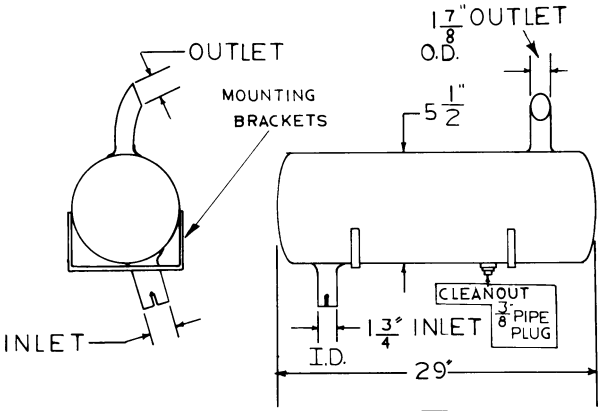

16888

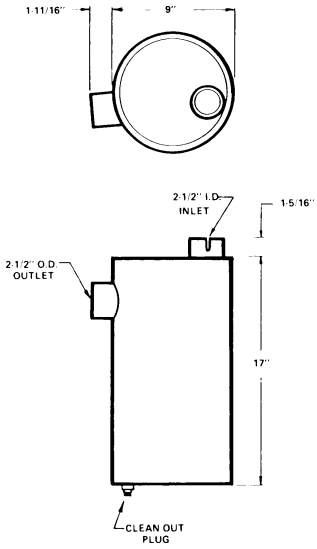

16909

NELSON *(continued)*

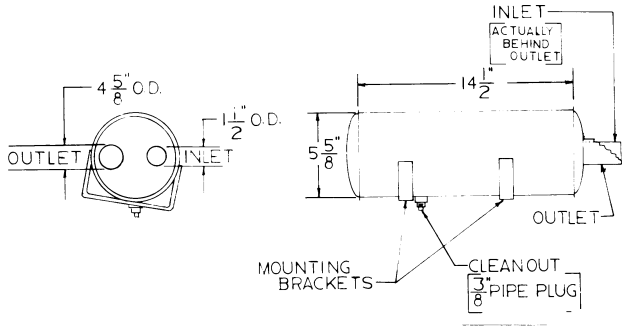

16932

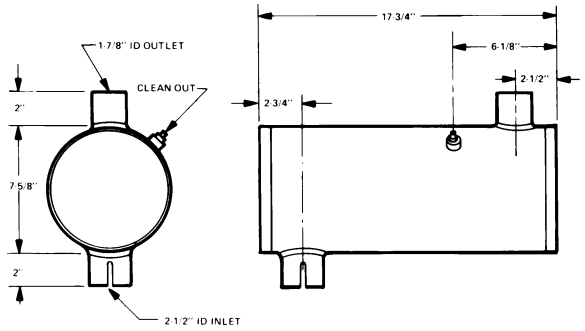

16956

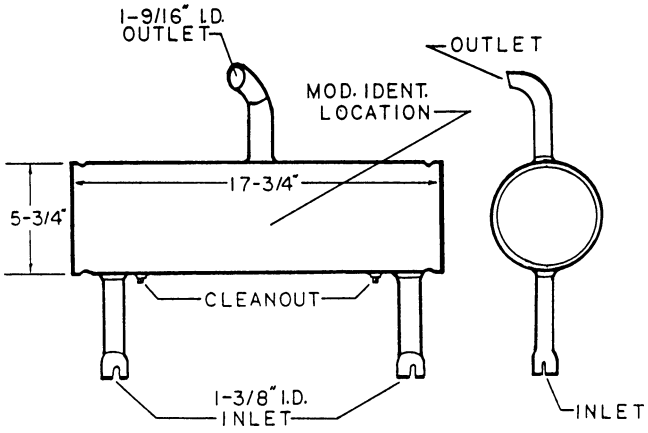

16986

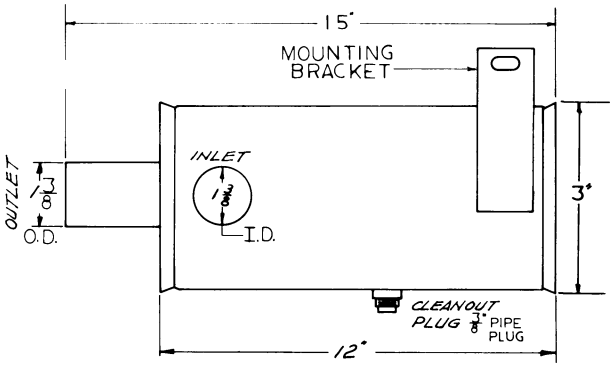

16988

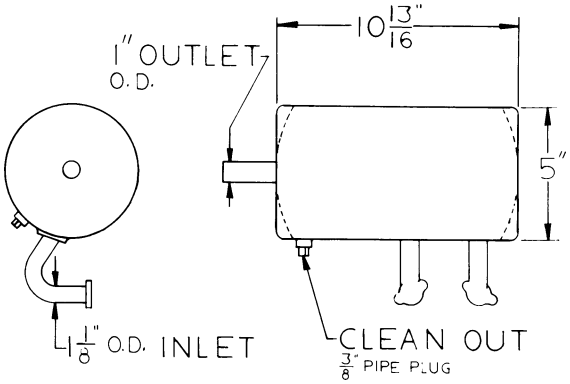

16989

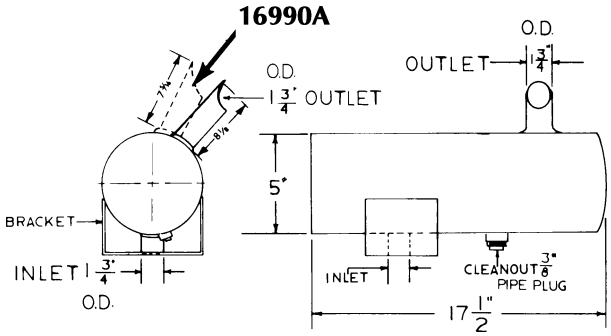

16990
16990A

Note: The difference between the 16990 and 16990A is the rotation angle, and length of outlet tube.

NELSON *(continued)*

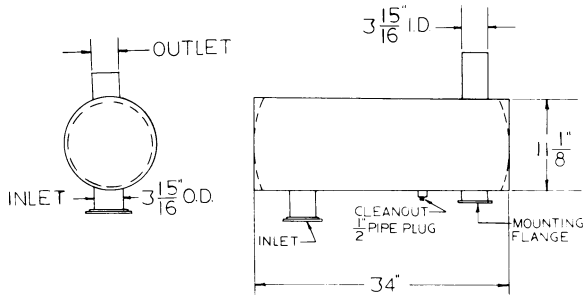

17005

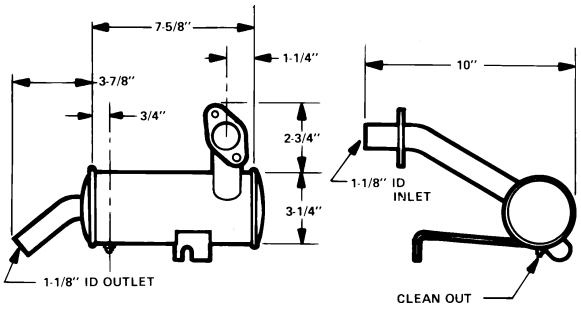

17043

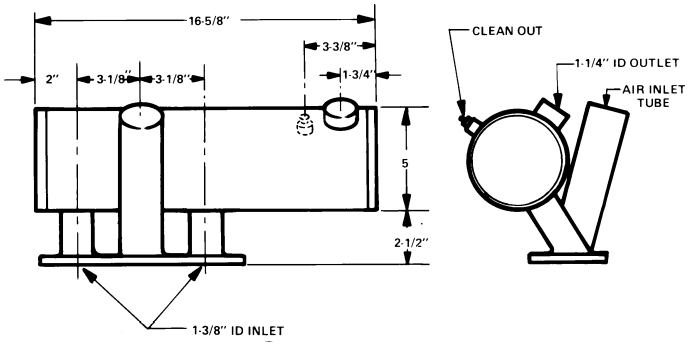

17088

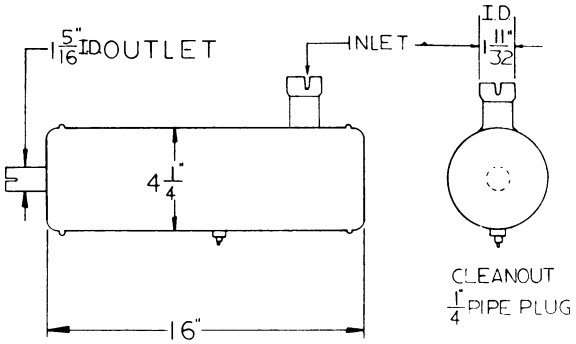

17112

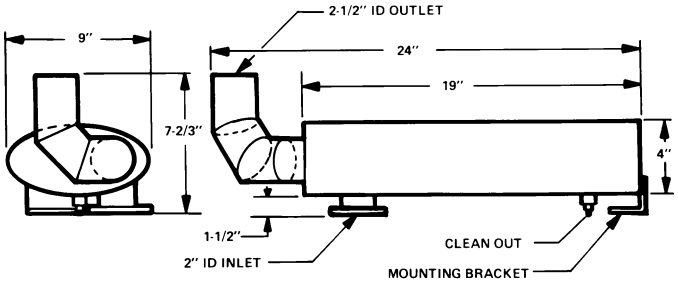

17123

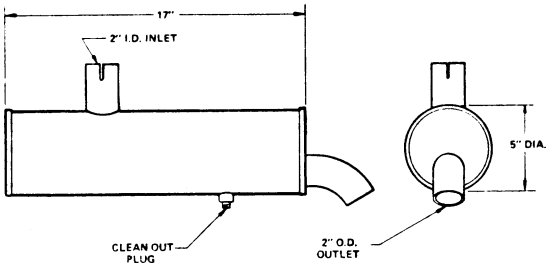

17185

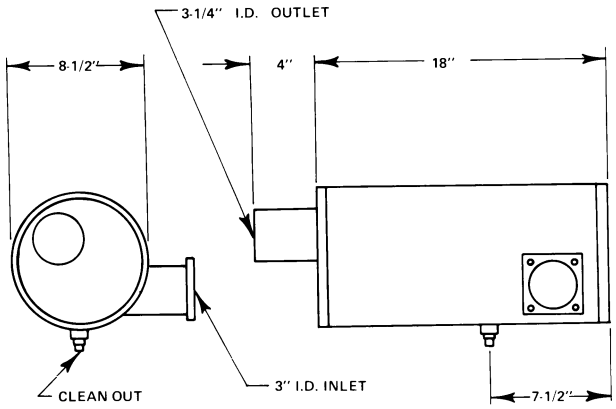

17254

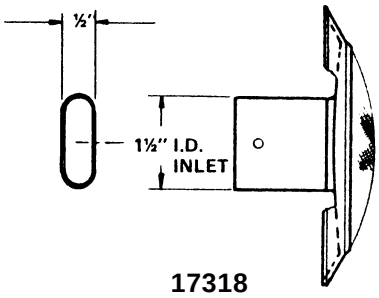

17318

For Nelson 35347 screen assembly

NELSON *(continued)*

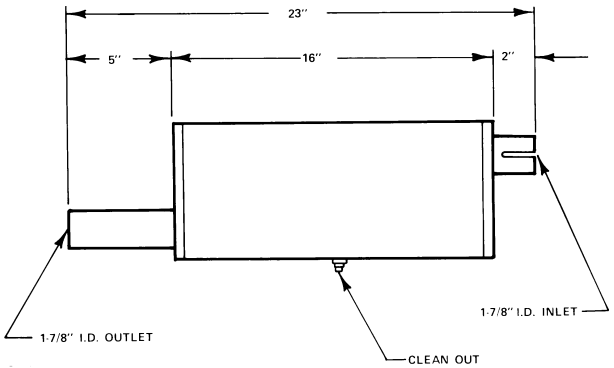

17334

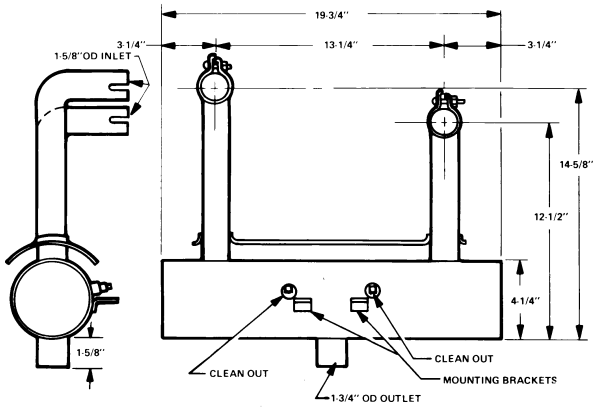

17371

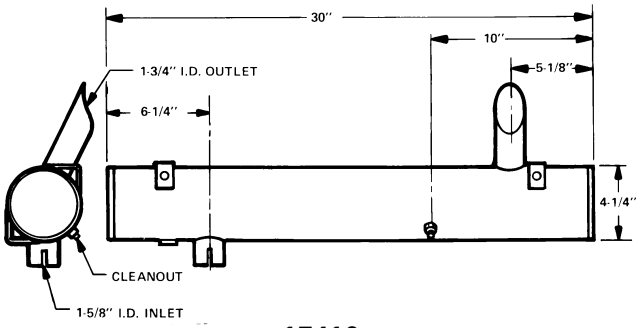

17410

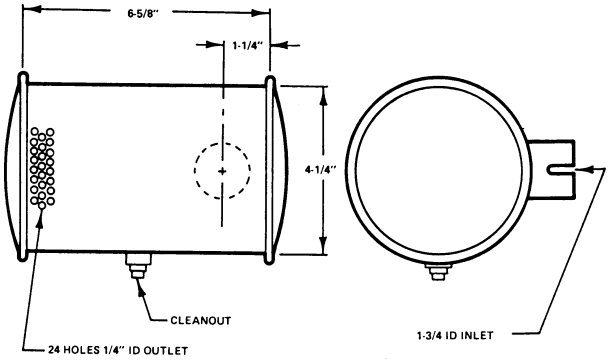

17470

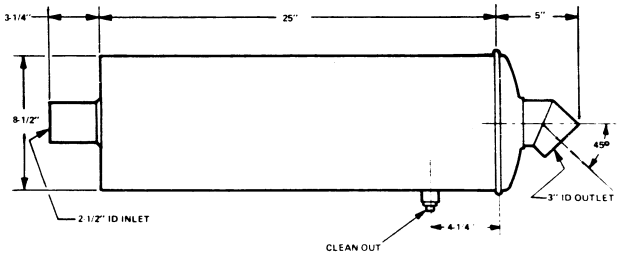

17480

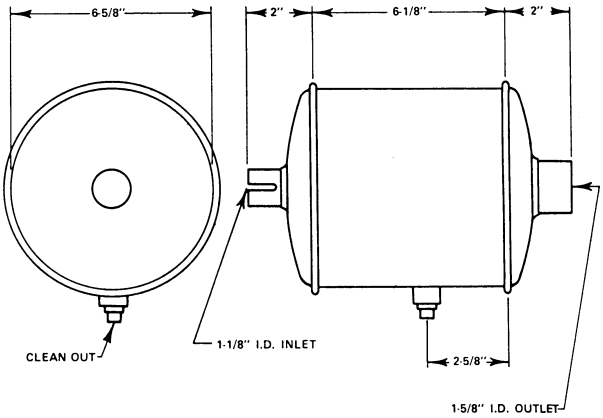

17533

NELSON *(continued)*

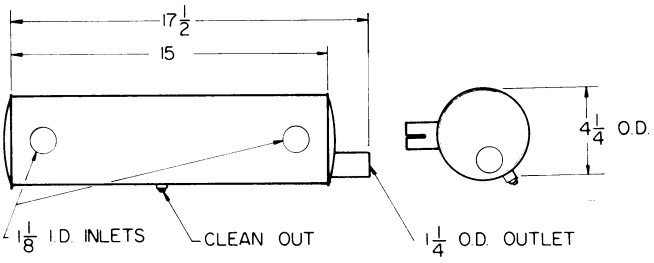

17622
17622C

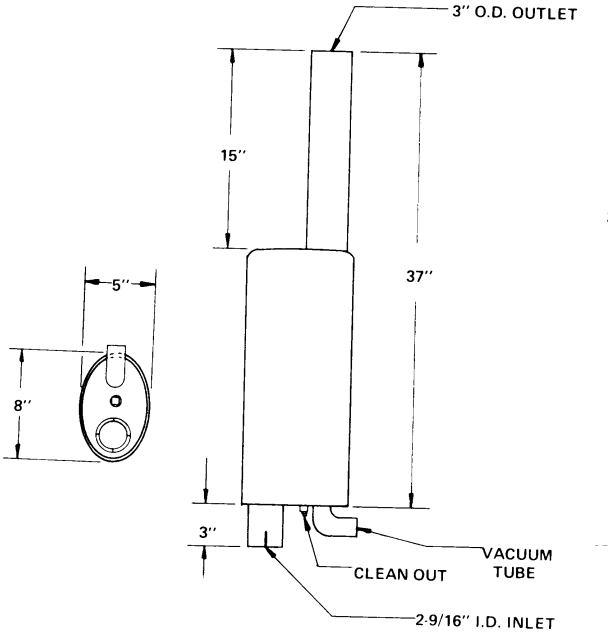

17657

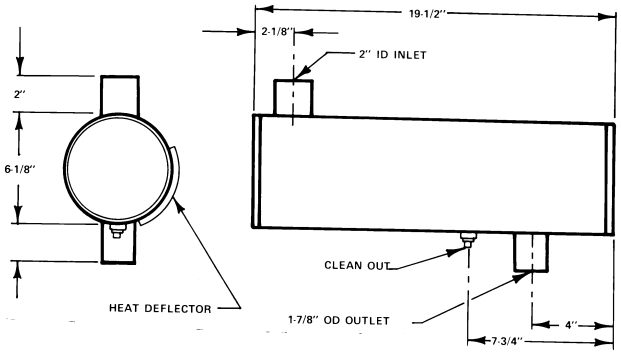

17674

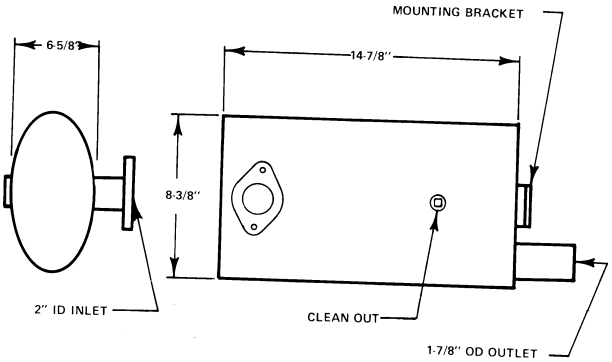

17695

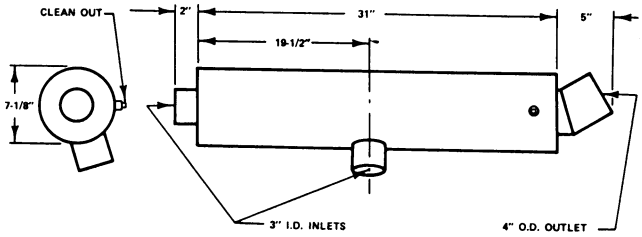

17701

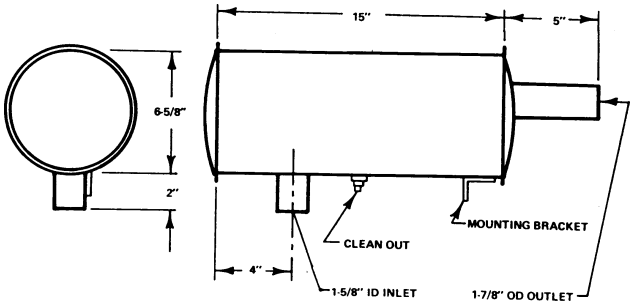

17746

NELSON *(continued)*

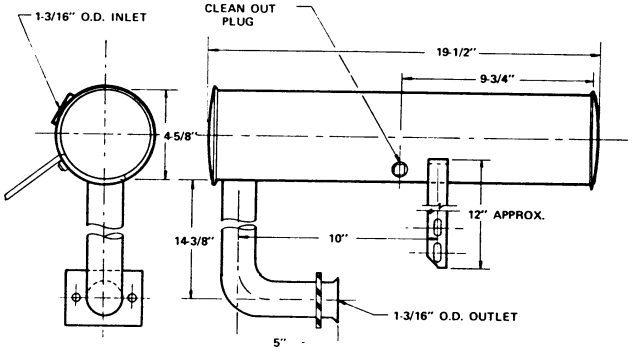

17747

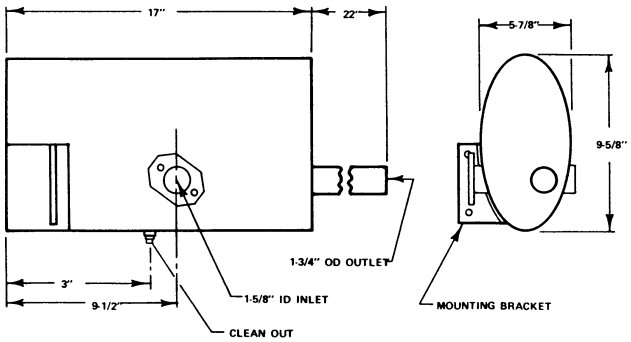

17749

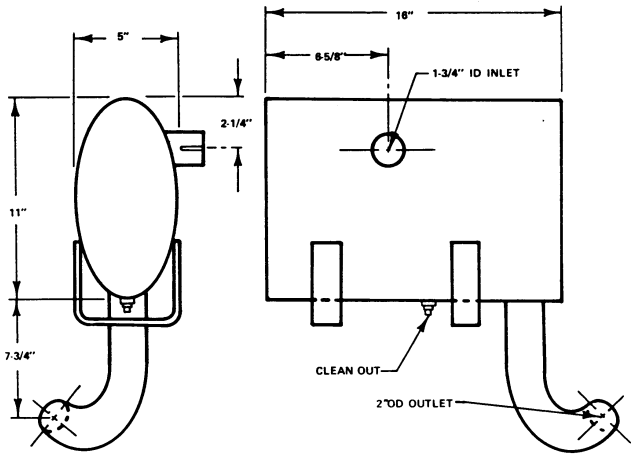

17750

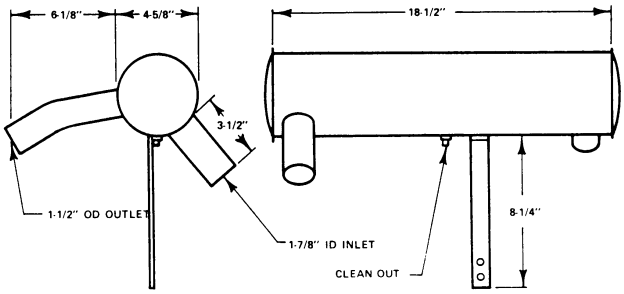

17765

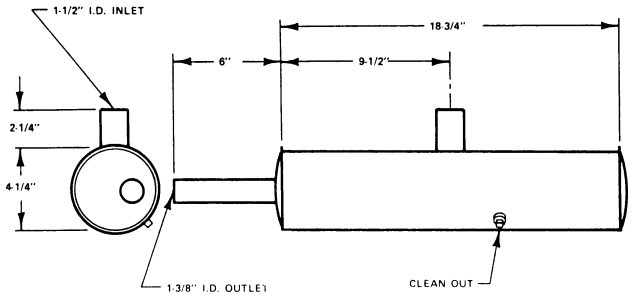

17898

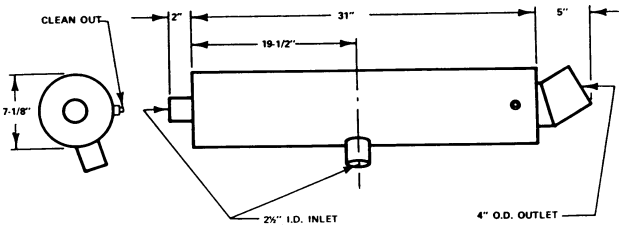

17899

NELSON *(continued)*

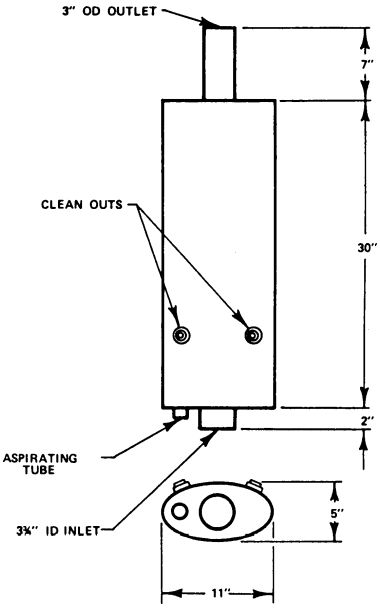

17973

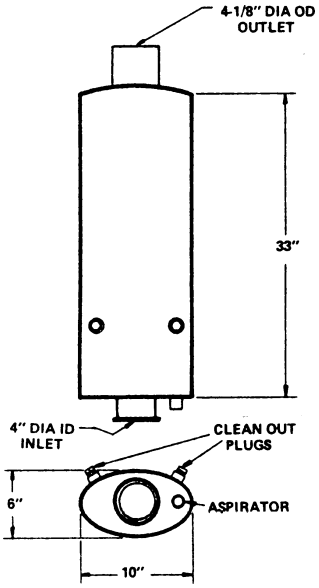

17974

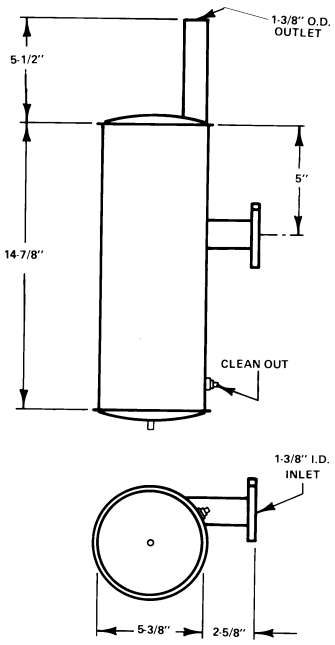

17998

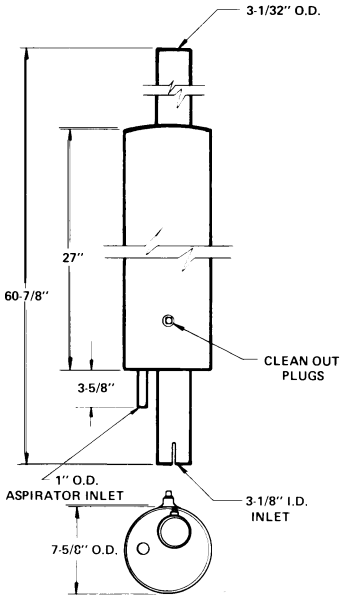

18018

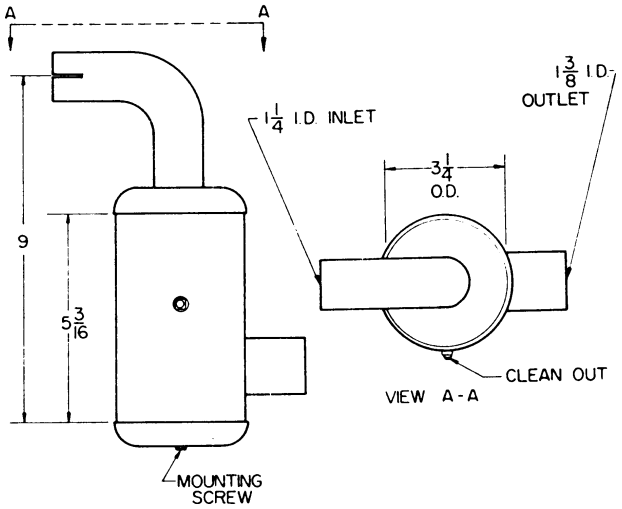

18031

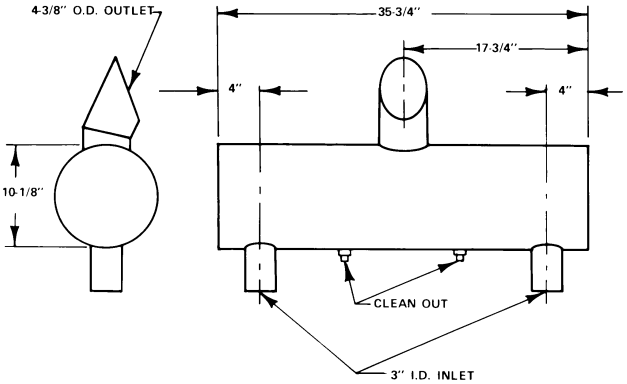

18090

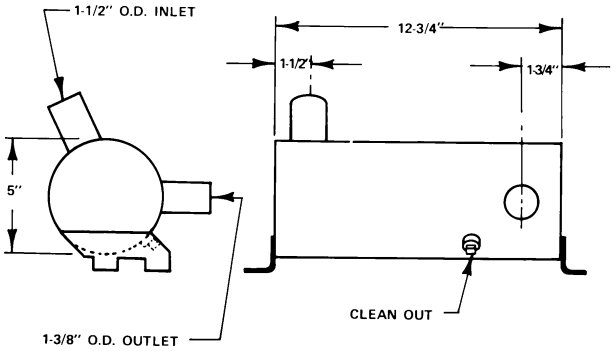

18289

NELSON *(continued)*

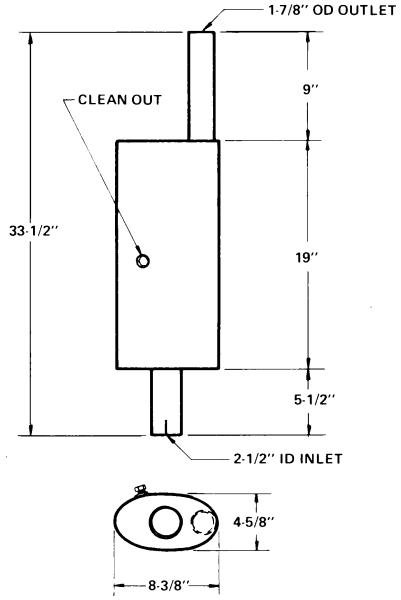

18433

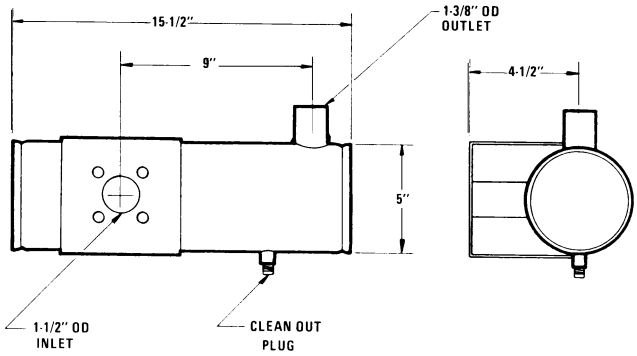

18528
18528A

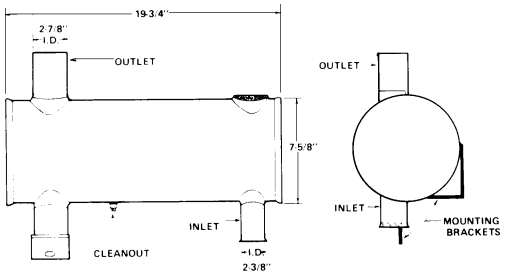

18613

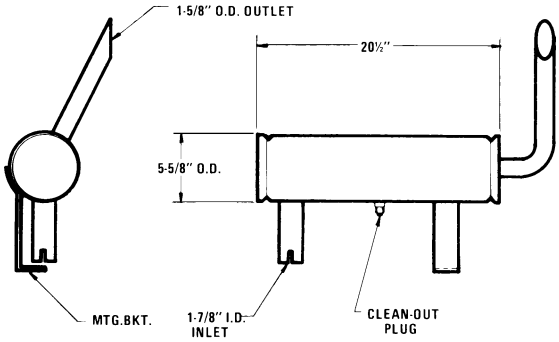

18631

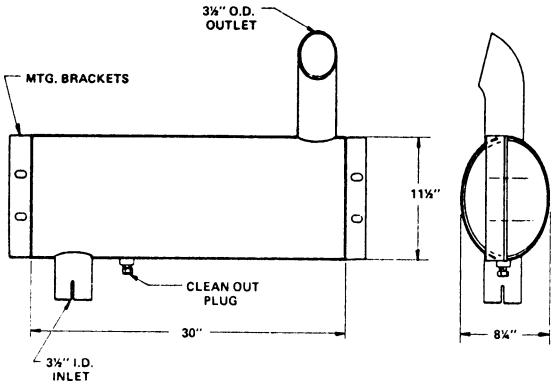

18642

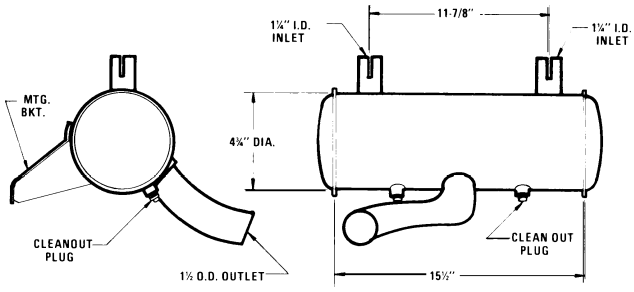

18731

NELSON *(continued)*

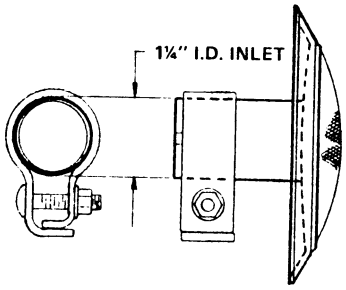

ADAPTER
18753

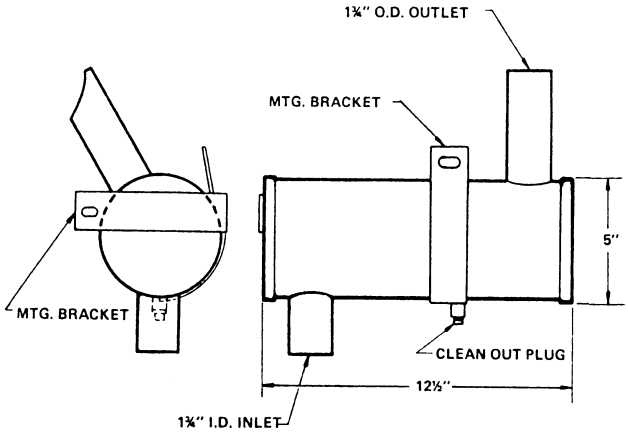

18798

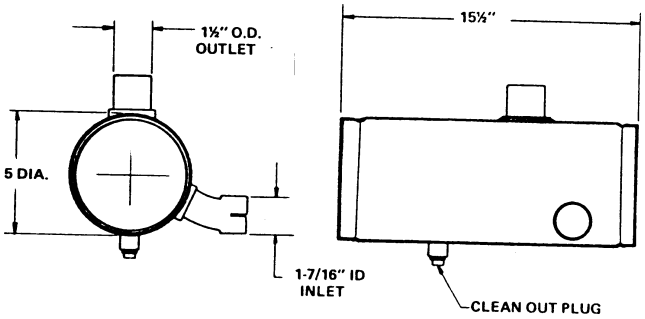

18875

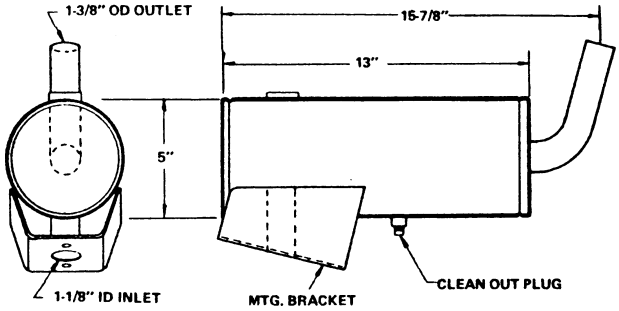

18885

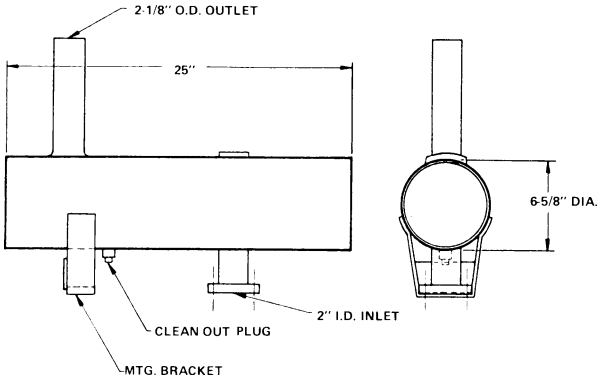

19005

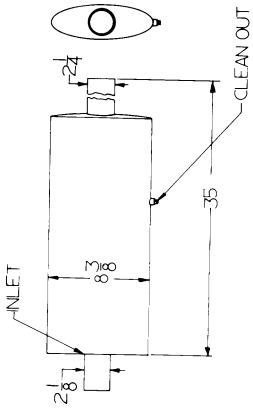

T-14222

Nelson 19051 approved as T-14222
Nelson 19052 approved as T-14222
Nelson 19053 approved as T-14222
Nelson 19062 approved as T-14222

NELSON *(continued)*

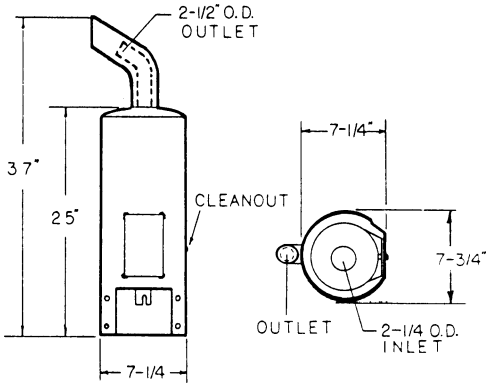

19068

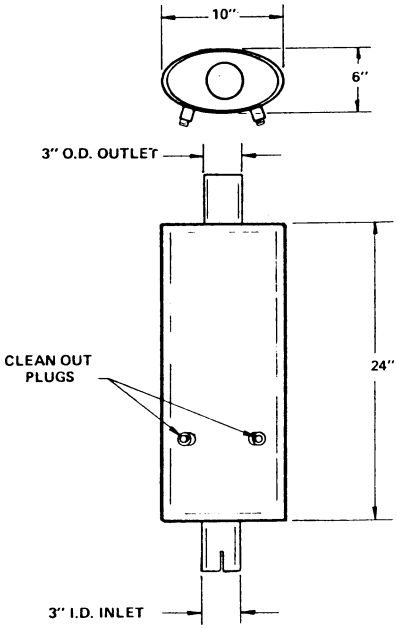

19125

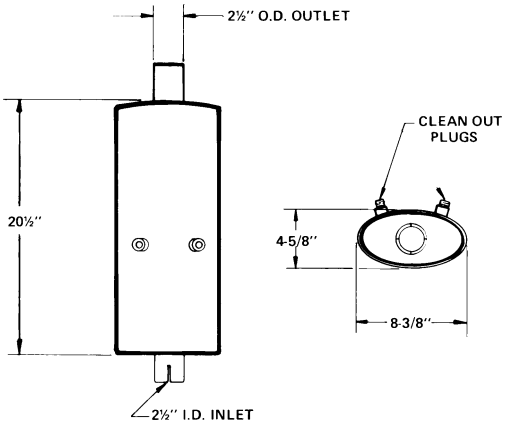

19126

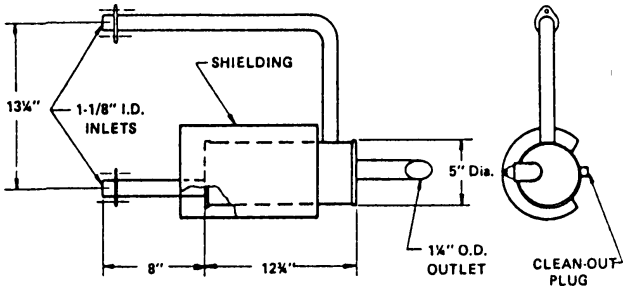

19139

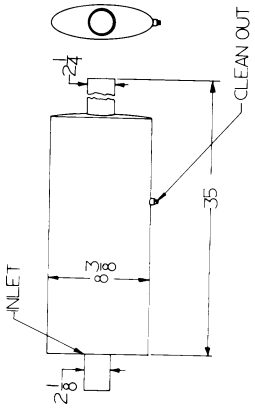

19269
T-14222

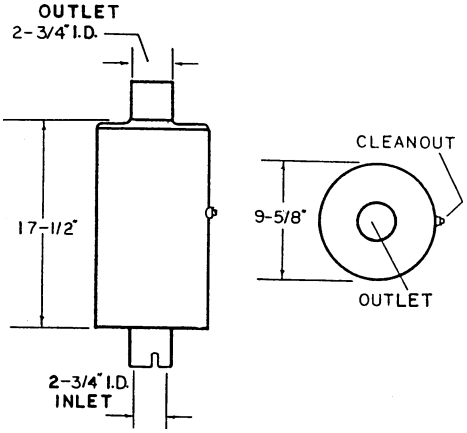

19273
T-14219

NELSON *(continued)*

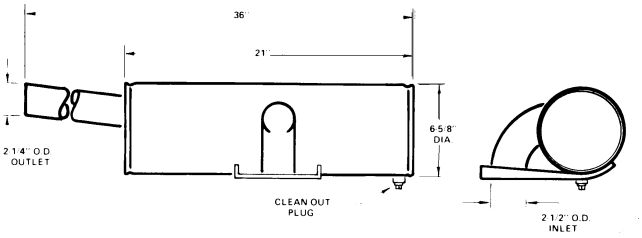

19341

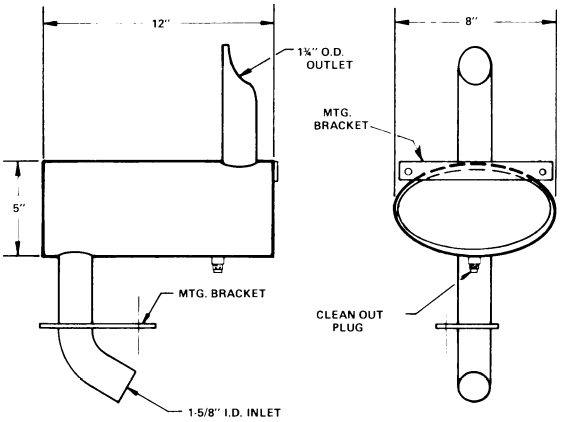

19382
23094

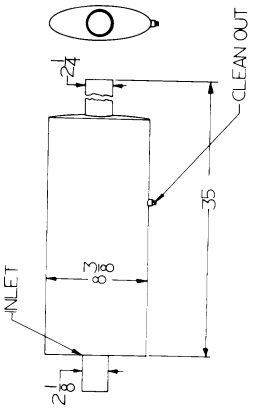

19383
T-14222

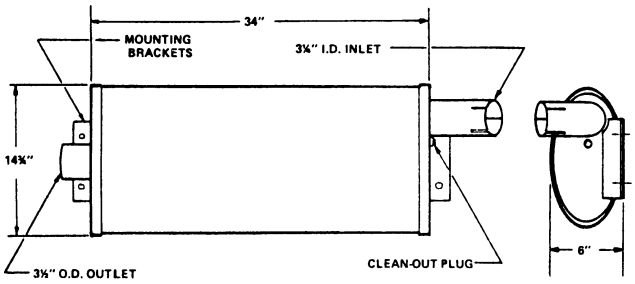

19453

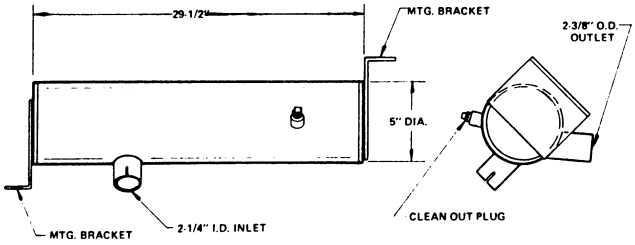

19578

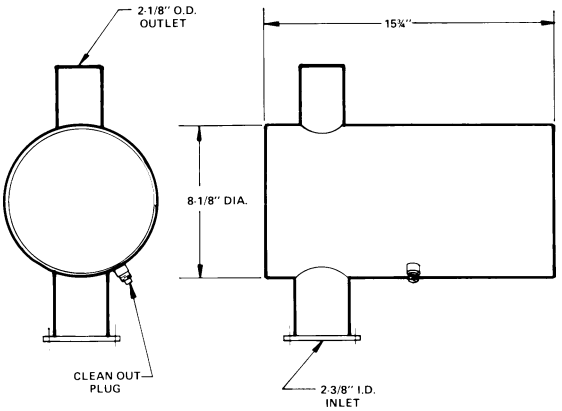

19705

NELSON *(continued)*

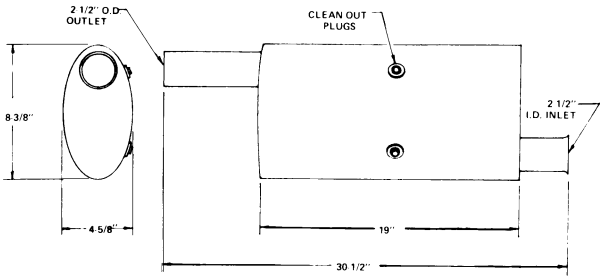

19773

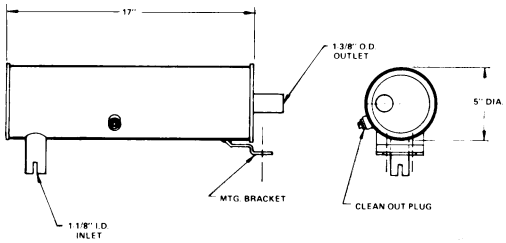

19820
20665
22904

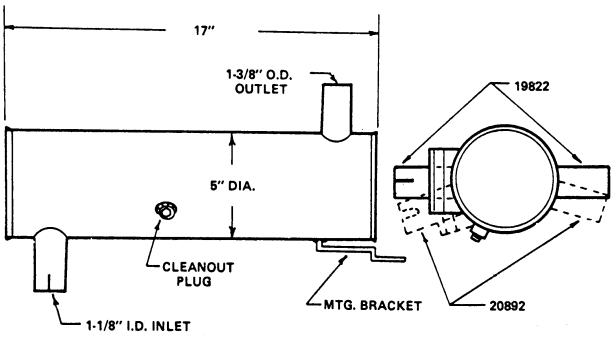

19822
20892A
20892B
20666

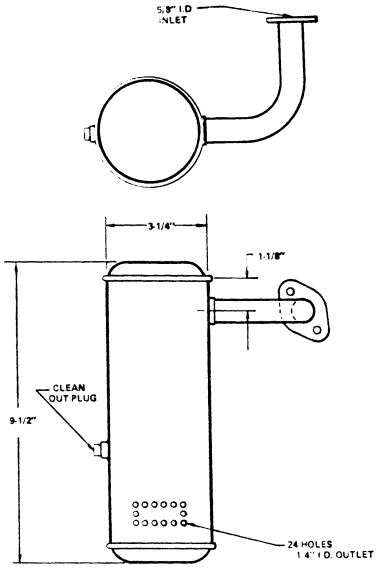

19825

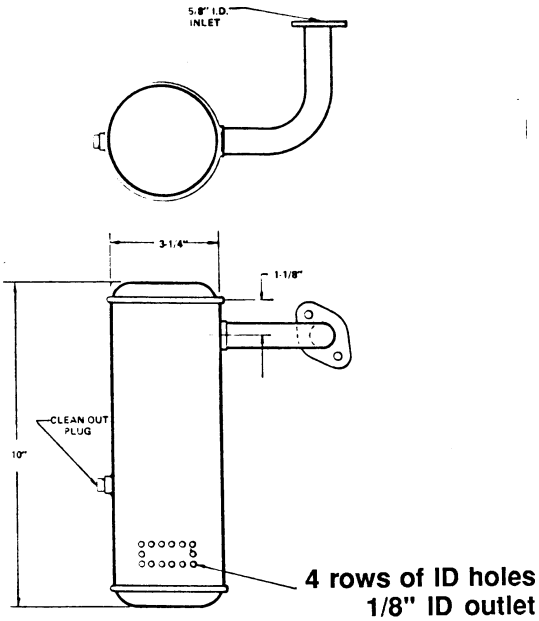

19826

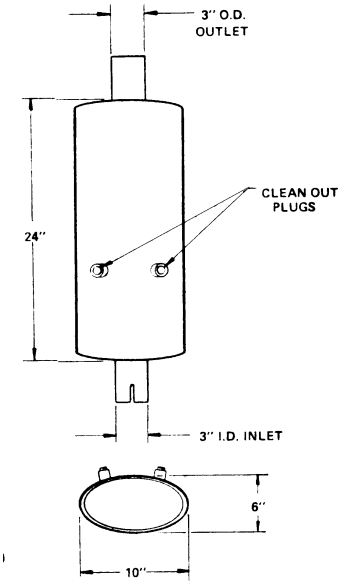

19830

NELSON *(continued)*

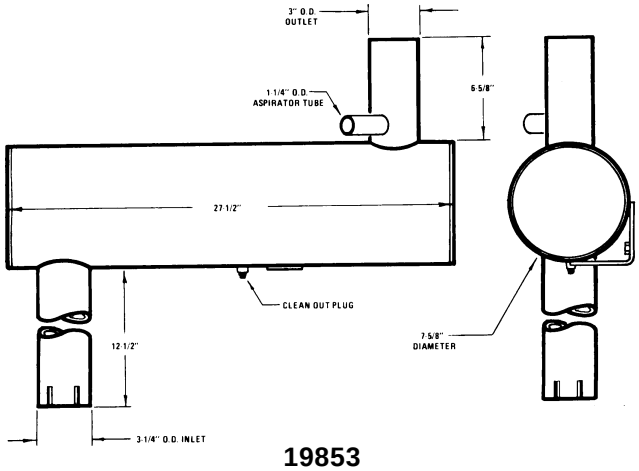

19853

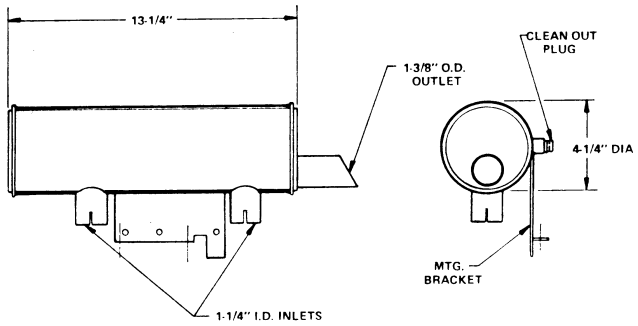

19941

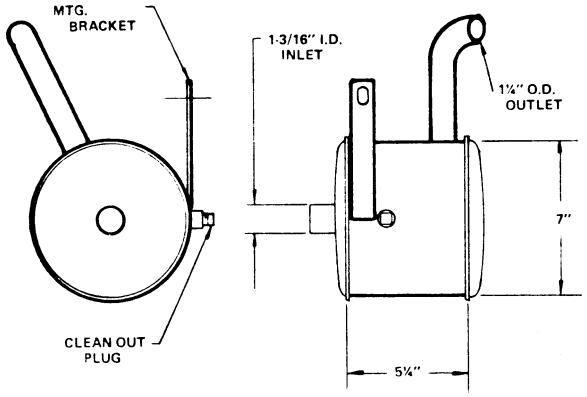

19973

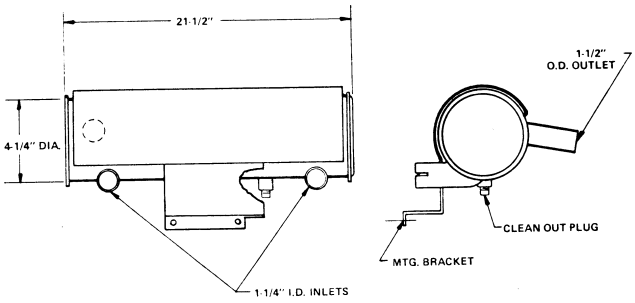

19975

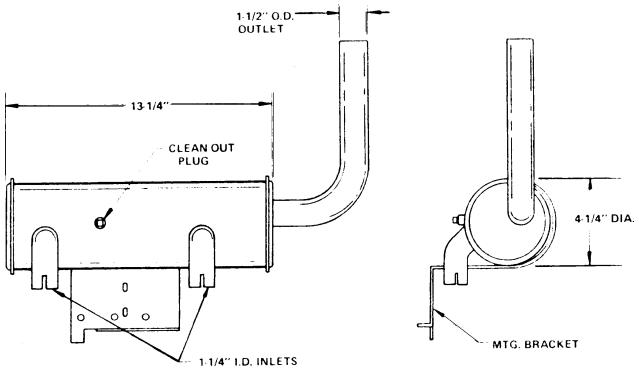

19976

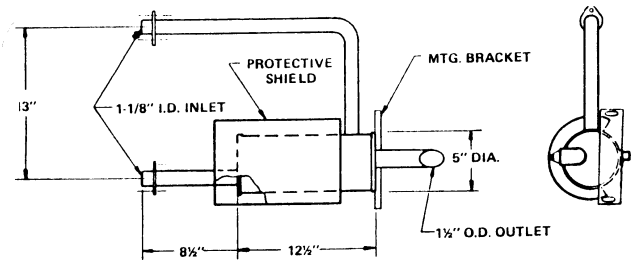

19994

NELSON *(continued)*

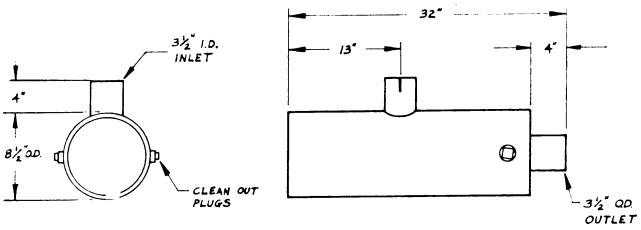

20069

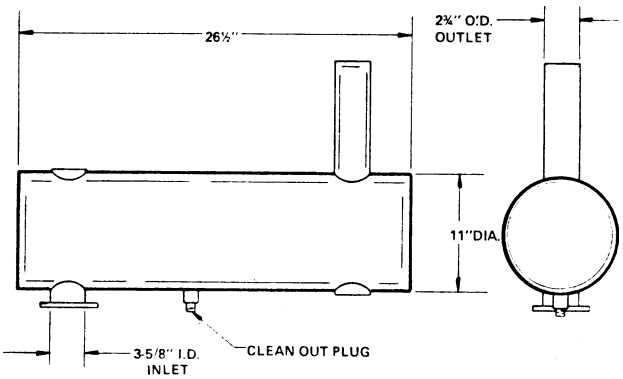

20072

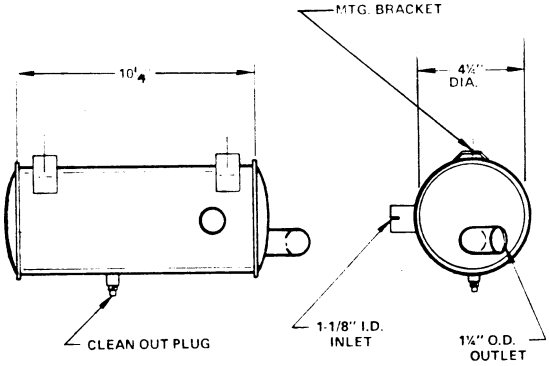

20147

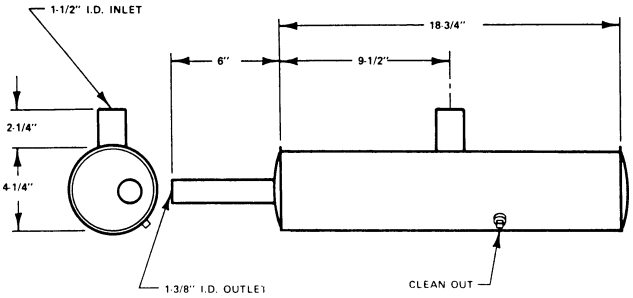

17898

Nelson 20343—same as 17898 except two clean out plugs
Nelson 20490 approved as Wacker WM80-58406

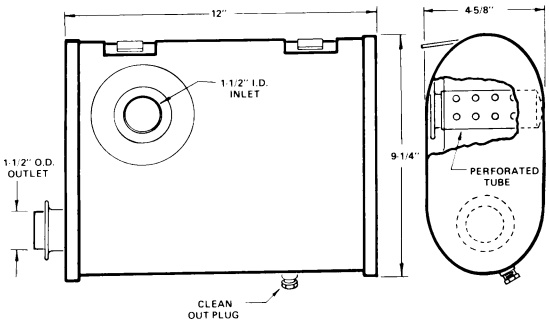

20513

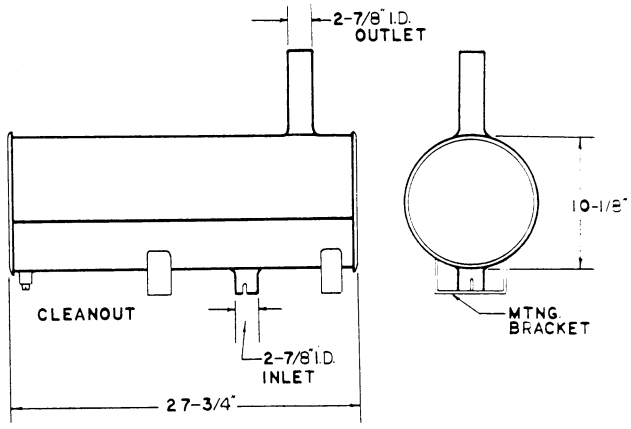

20519

NELSON *(continued)*

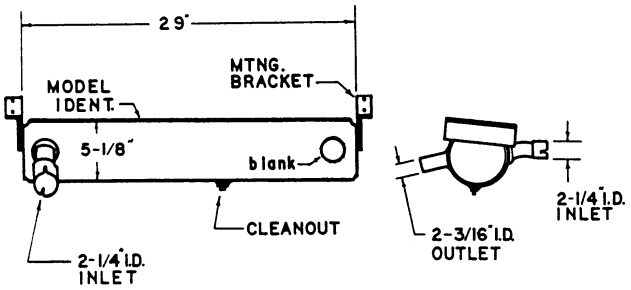

20539

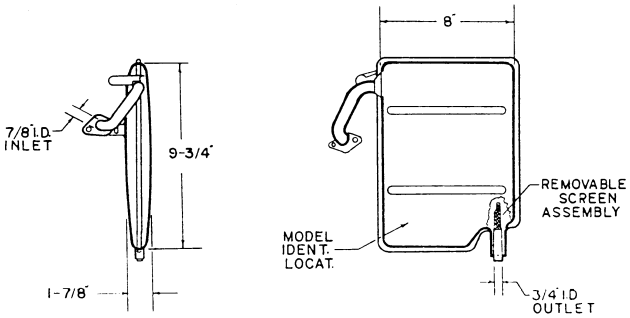

20578
23259A

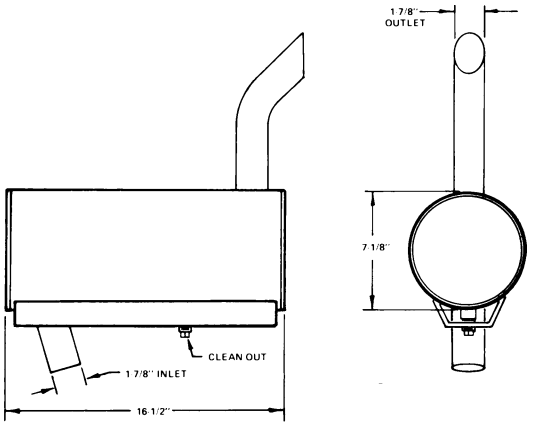

20608
22416

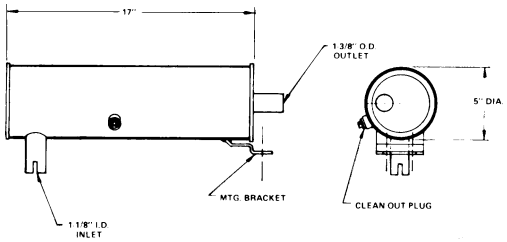

20665
19820

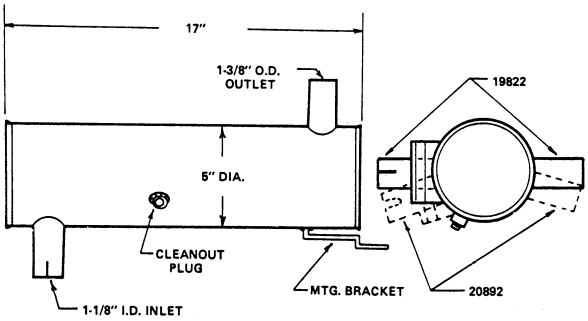

20666
19822
20892A
20892B

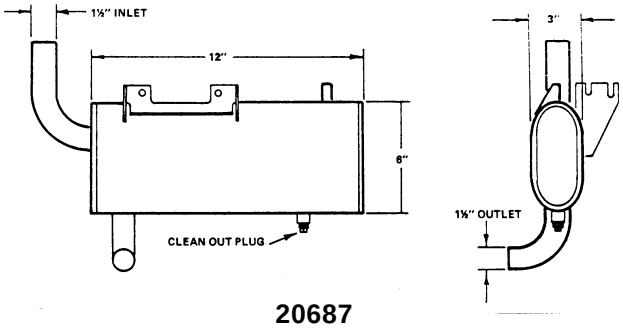

20687

NELSON *(continued)*

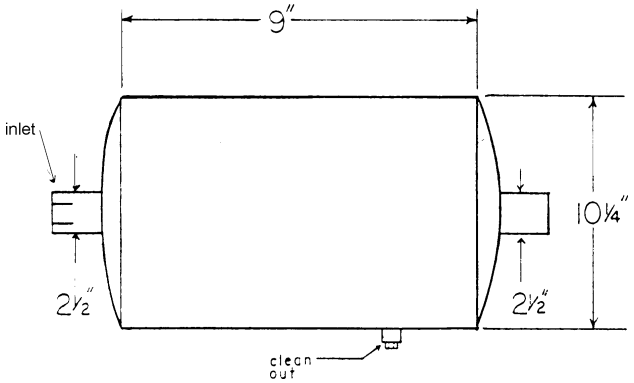

20710

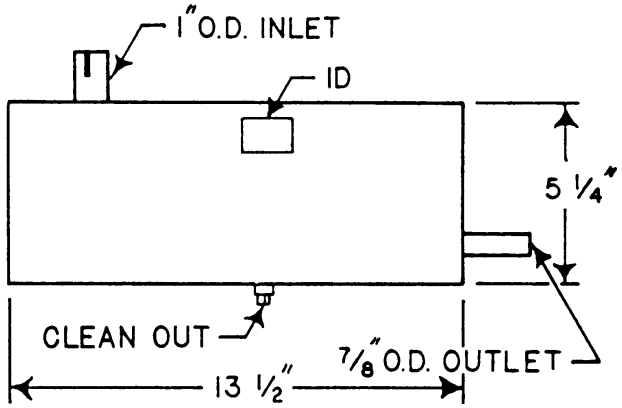

20788

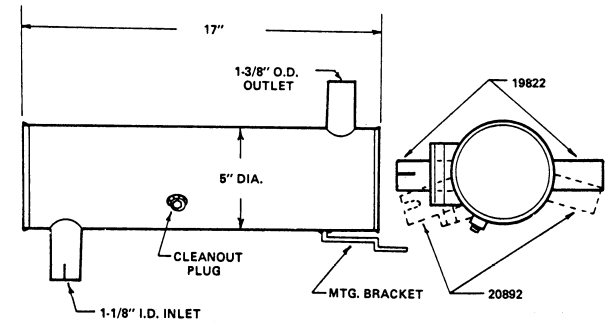

20892A
20892B
20666
19822

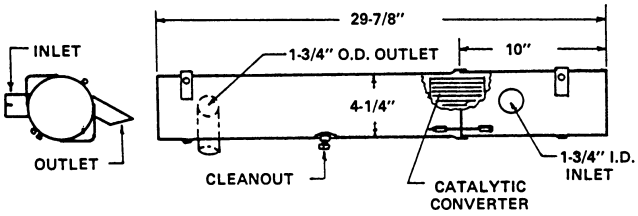

20952

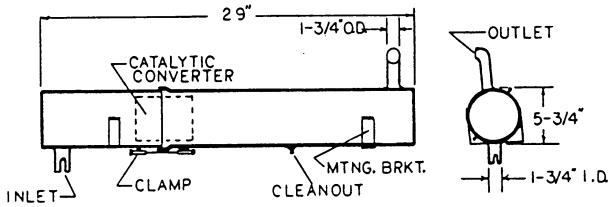

20953

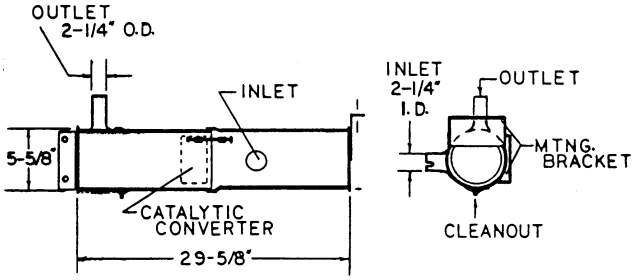

20954

NELSON *(continued)*

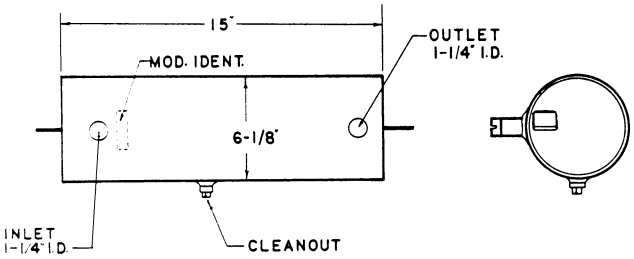

20965

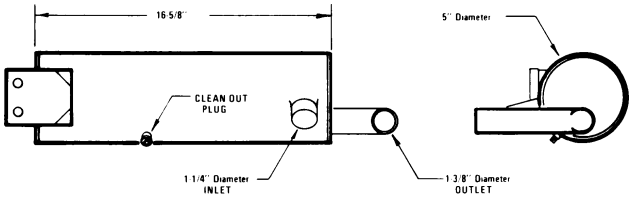

20990
20990B
23718

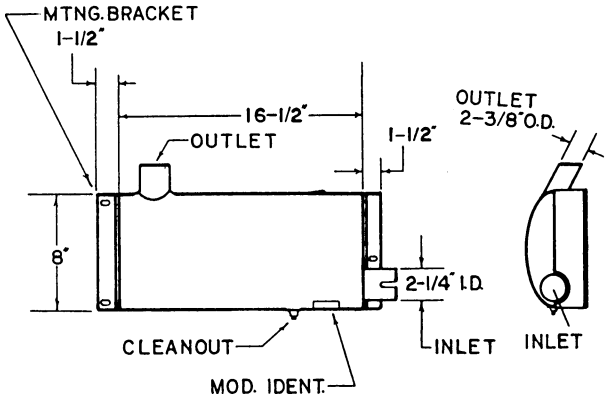

21140

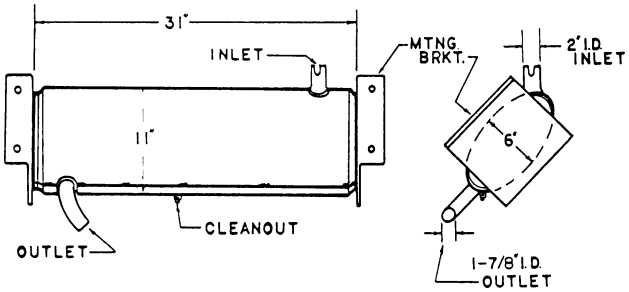

21161

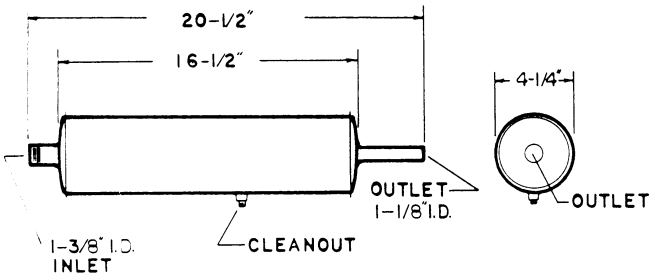

21279

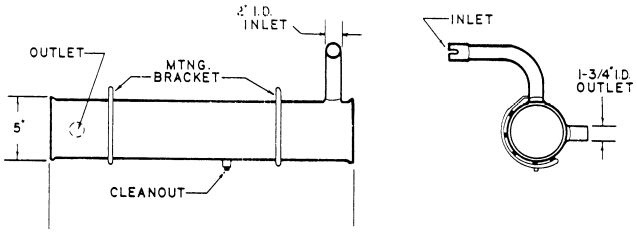

21341
23162

NELSON *(continued)*

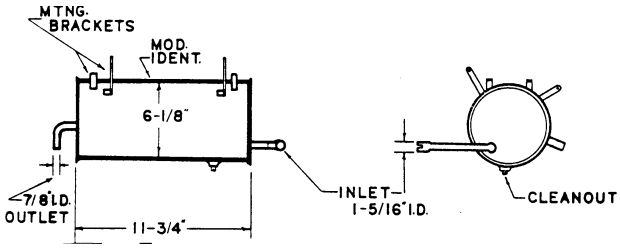

21721

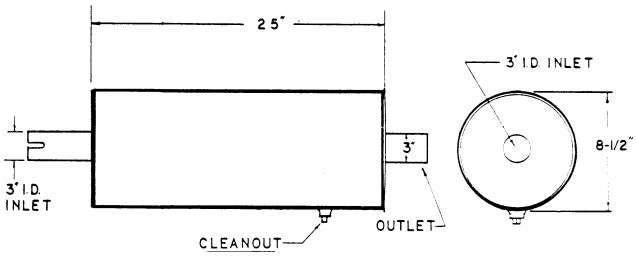

21758

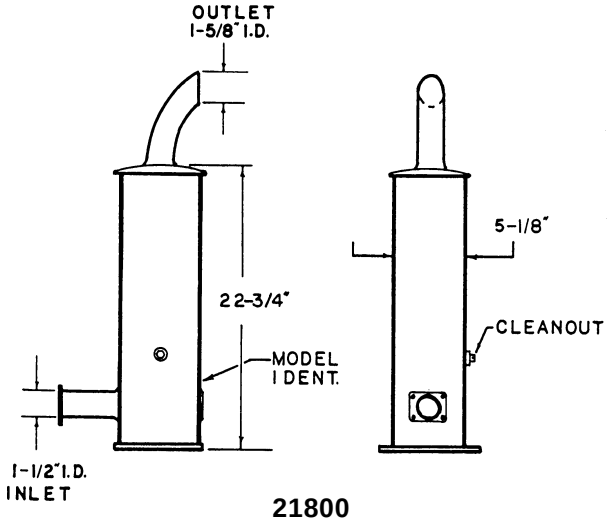

21800
21800A
21800C

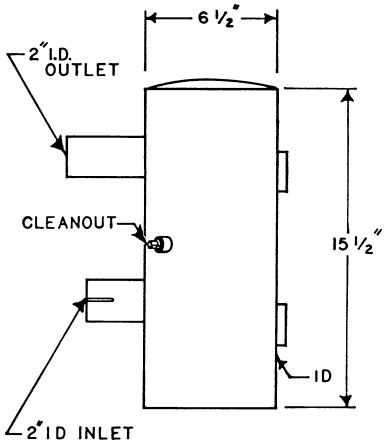

21863

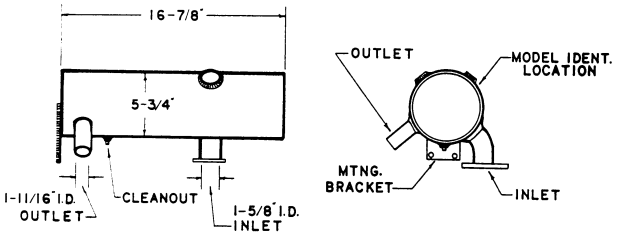

21884

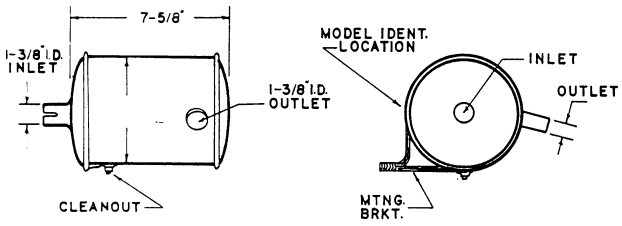

21928

NELSON *(continued)*

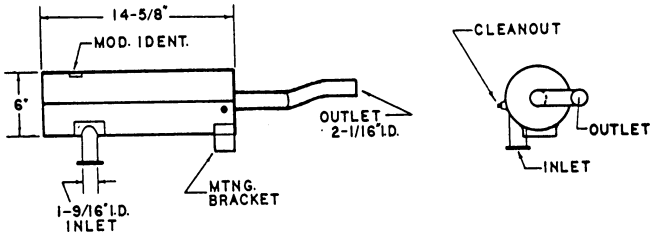

21950
21950B

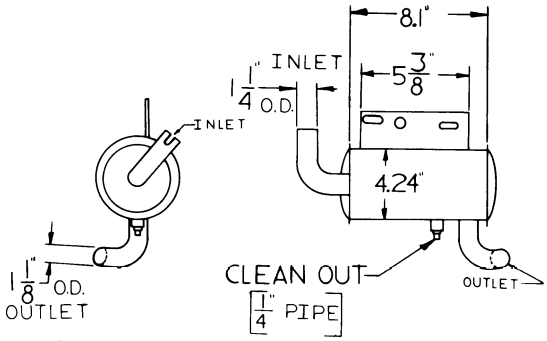

22157
16362

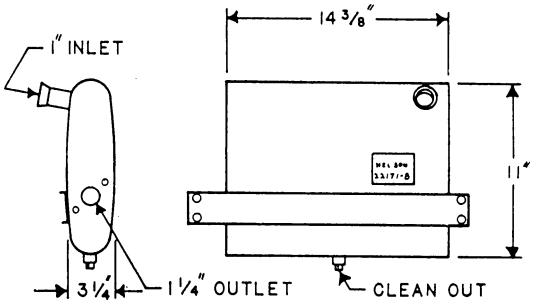

22171B

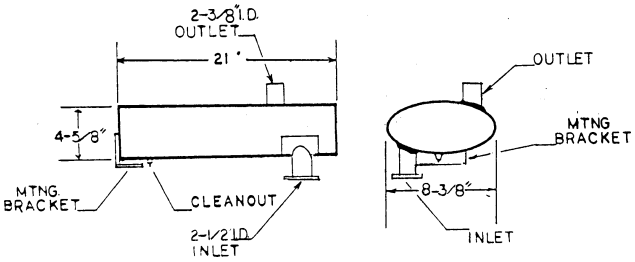

22255

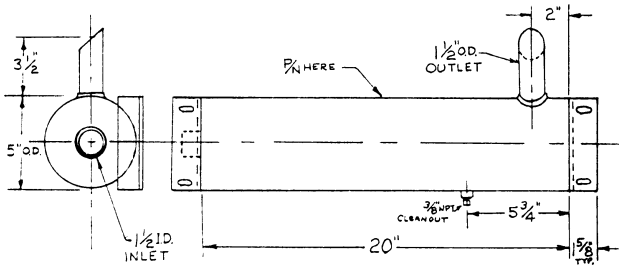

22389

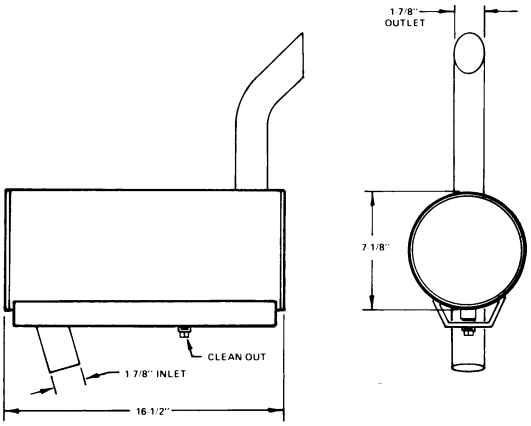

22416
20608

NELSON *(continued)*

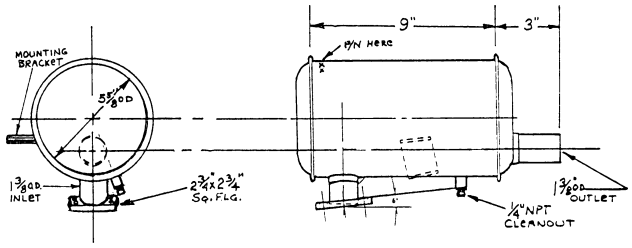

22506

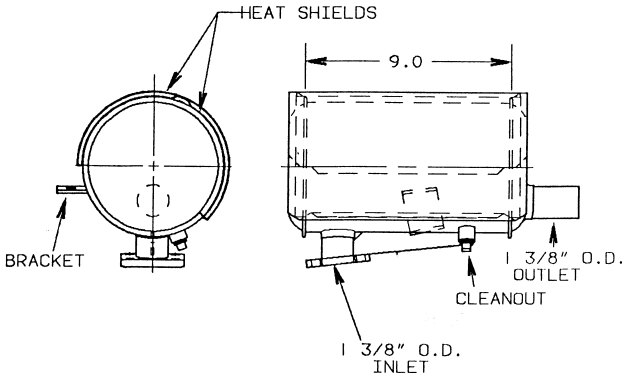

22506A

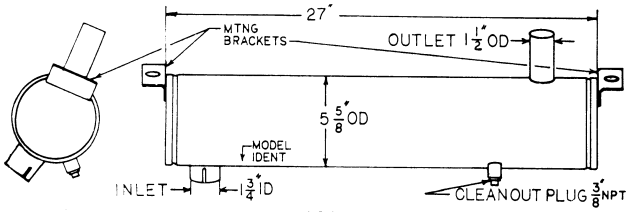

22627
24304

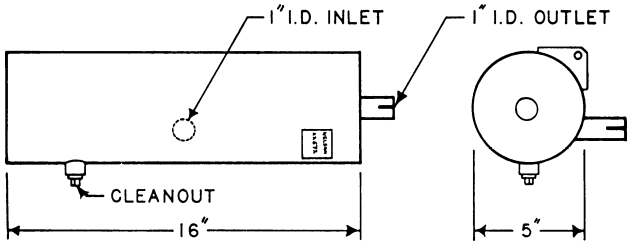

22671
22672

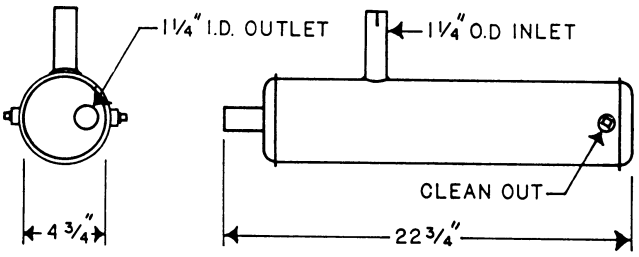

22755

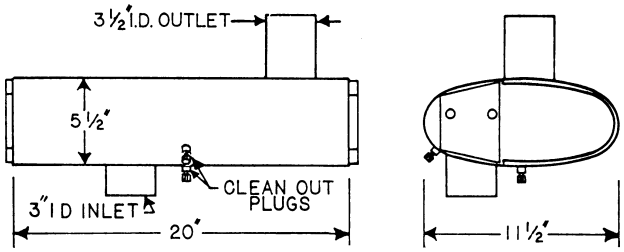

22807A

Nelson 22737—see Kohler 278224
Nelson 22755—see Kohler 279724
Nelson 22777—see Kohler 278223
Nelson 22801A—see modified Nelson 22171B

NELSON *(continued)*

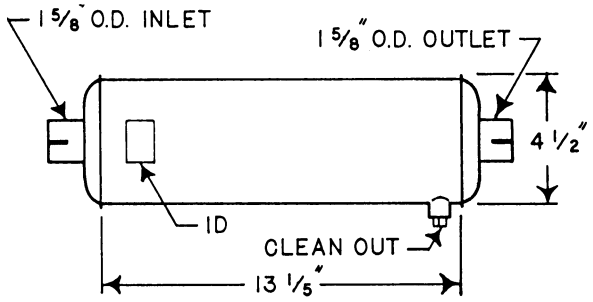

22823

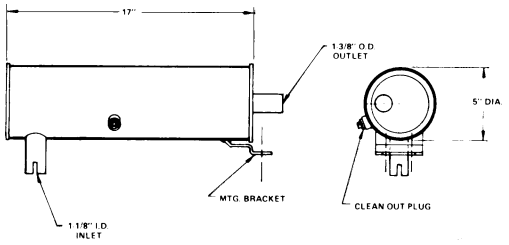

22904
19820
20665

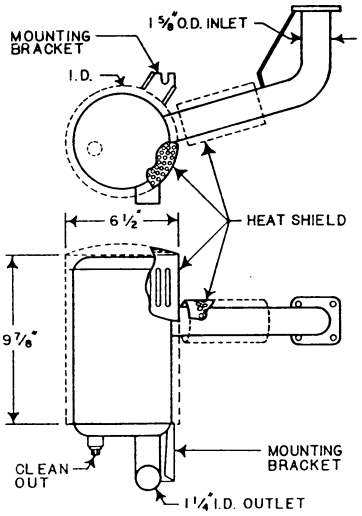

22917

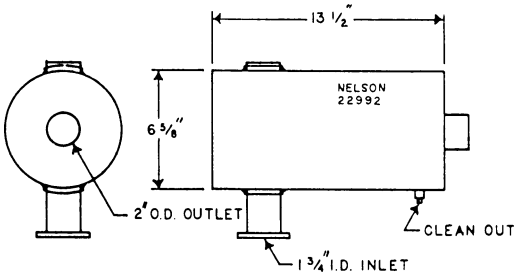

22992
22992A

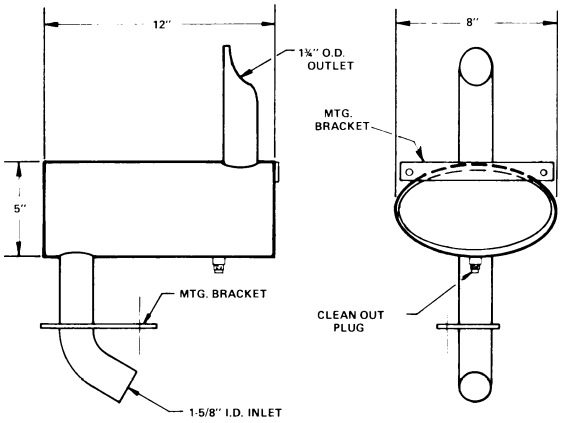

23094
19382

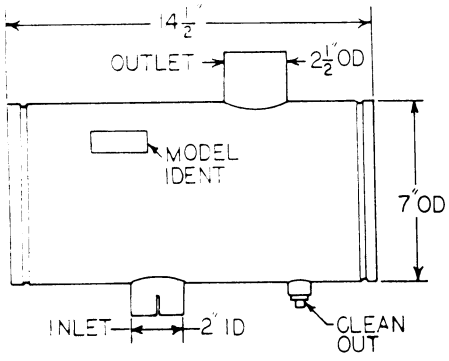

23096

NELSON *(continued)*

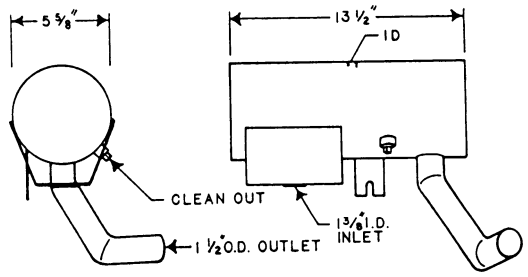

23137

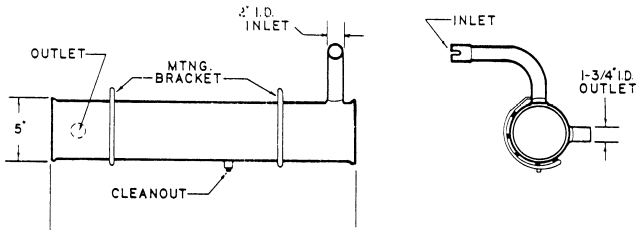

23162
21341

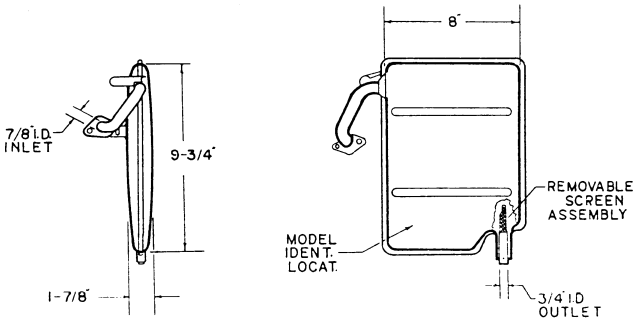

23259A
20578

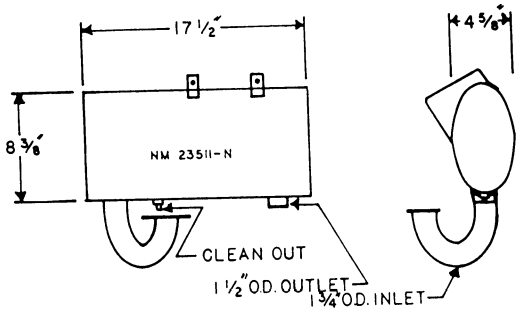

23511A

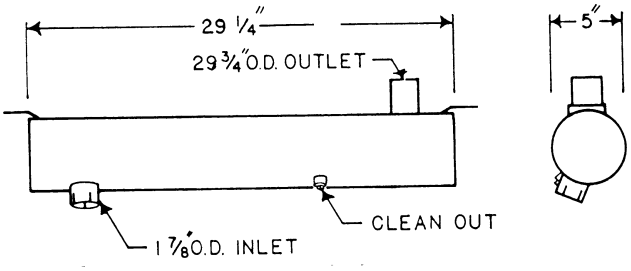

23643

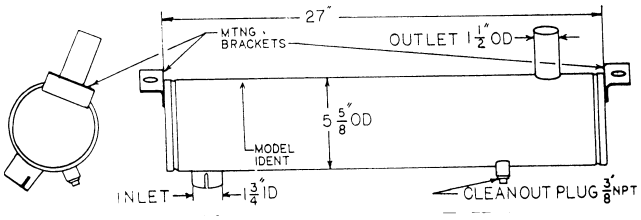

23697

NELSON *(continued)*

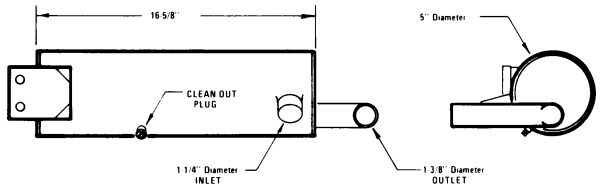

23718
20990
20990B

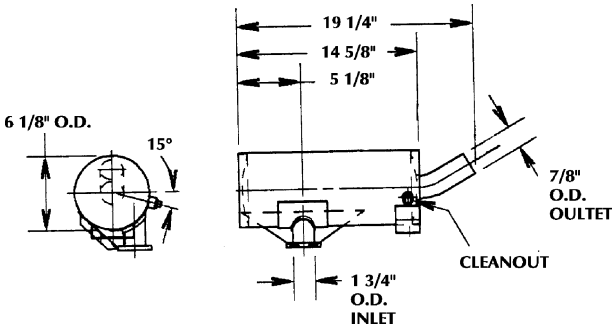

23746

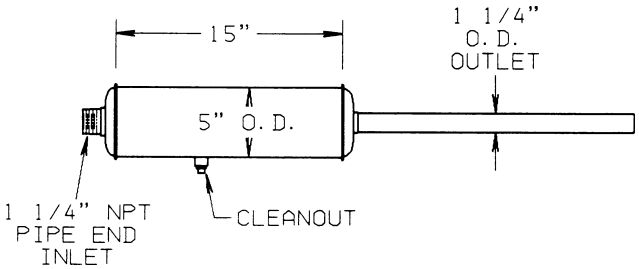

23843

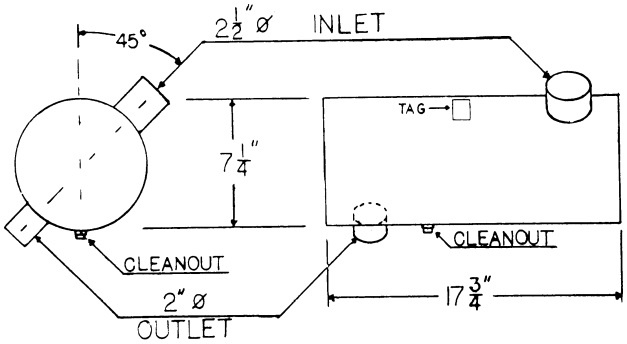

23852

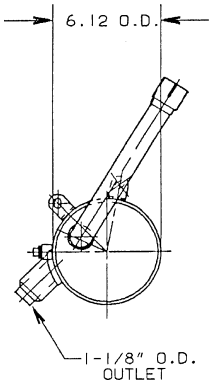

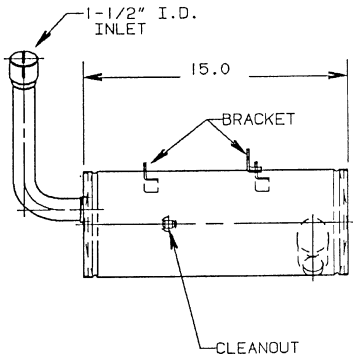

23860

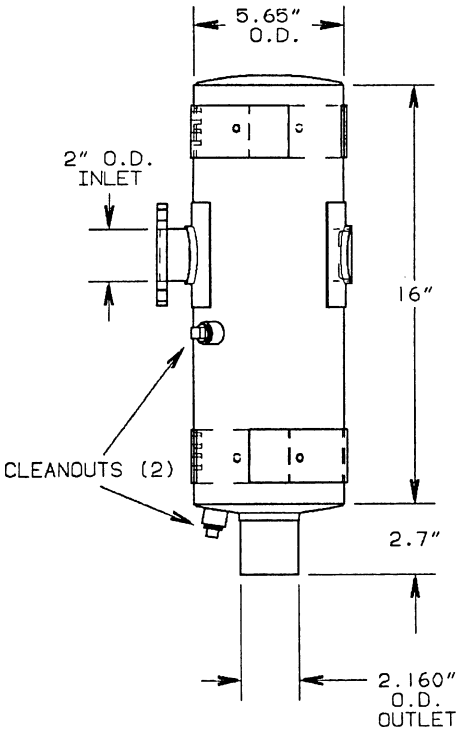

23893
INVERTED BODY

NELSON *(continued)*

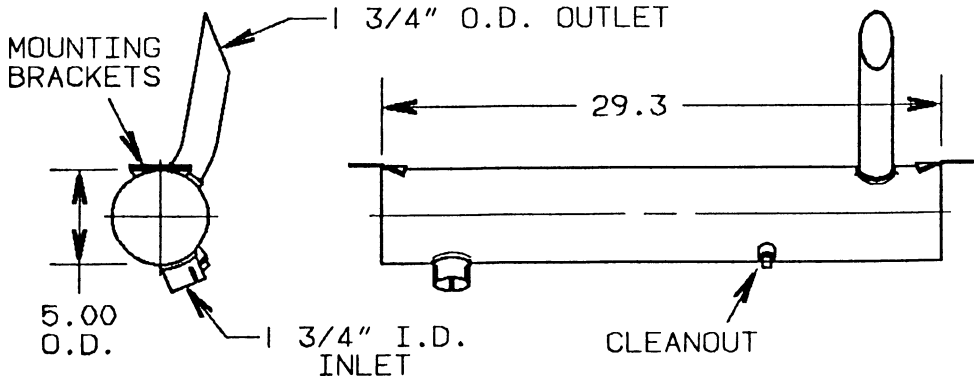

24035

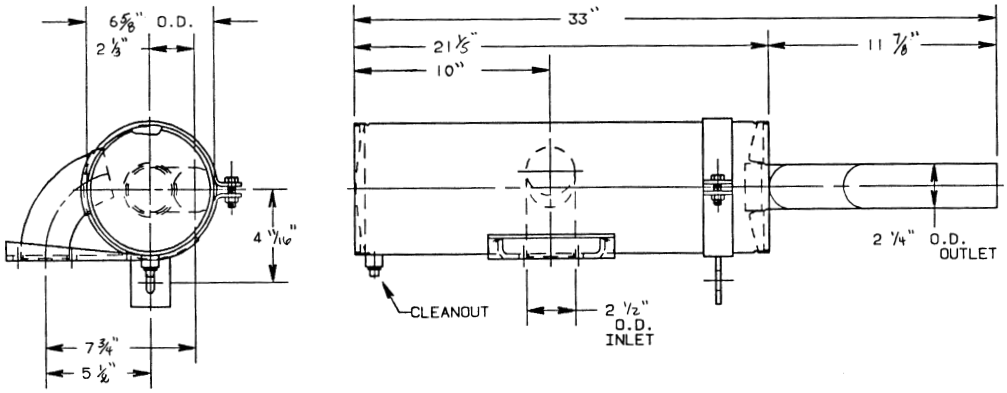

24083

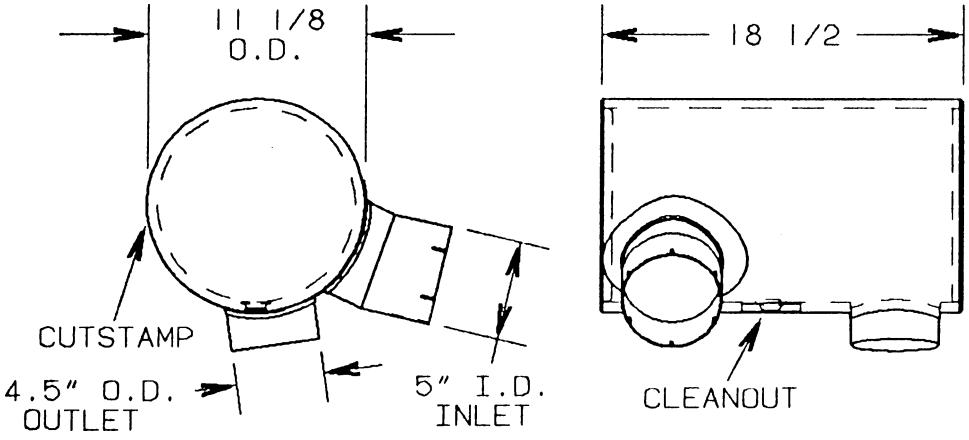

24148

NELSON *(continued)*

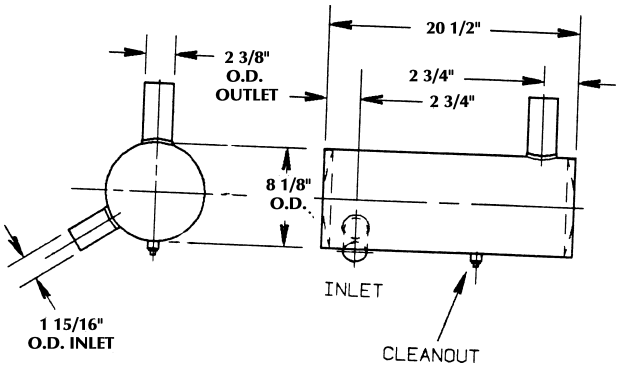

24180

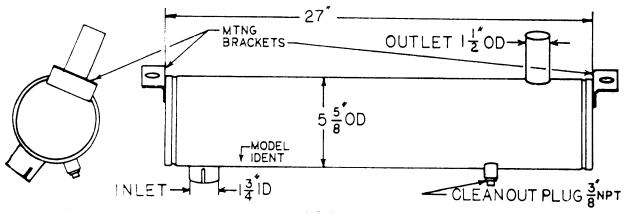

24304
22627

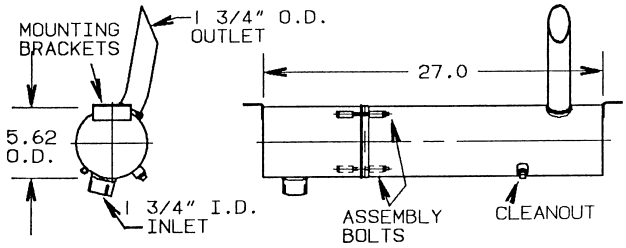

24379

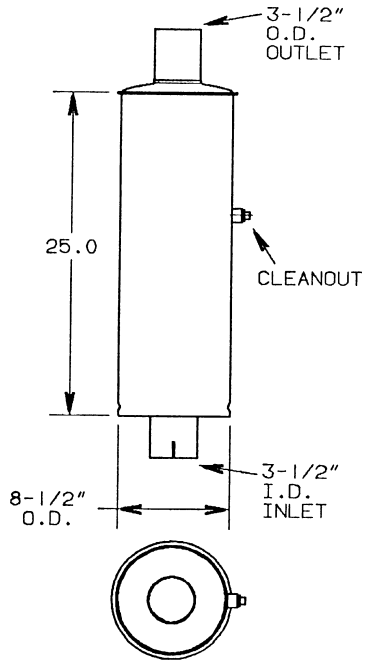

24459

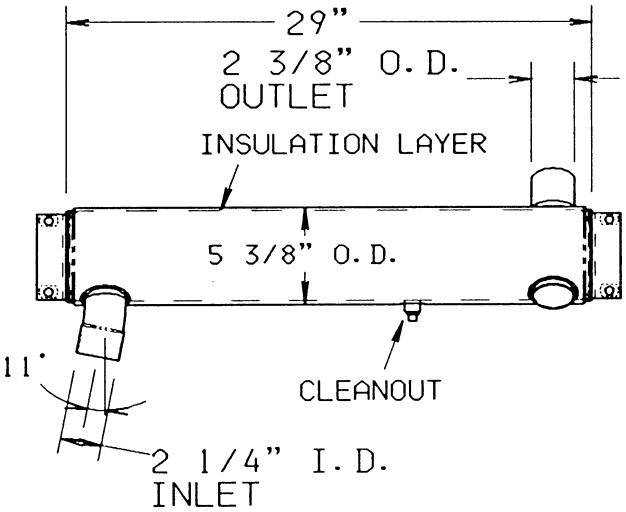

24707

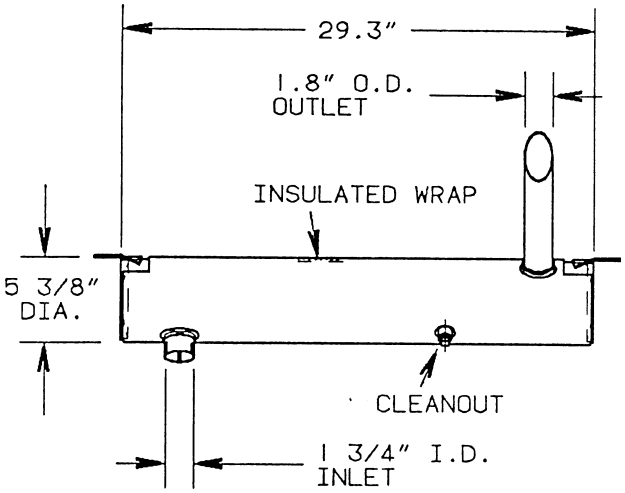

24710

NELSON *(continued)*

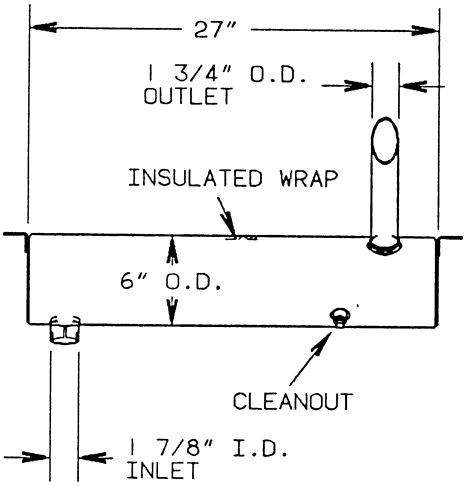

24711

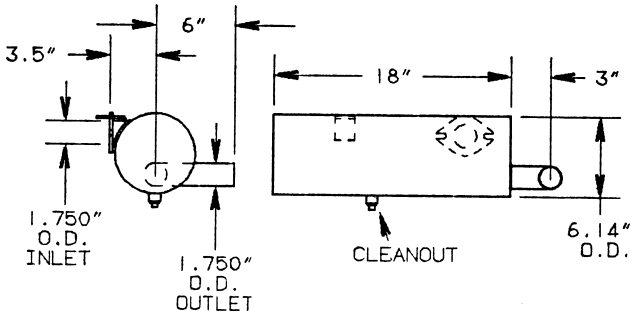

24745

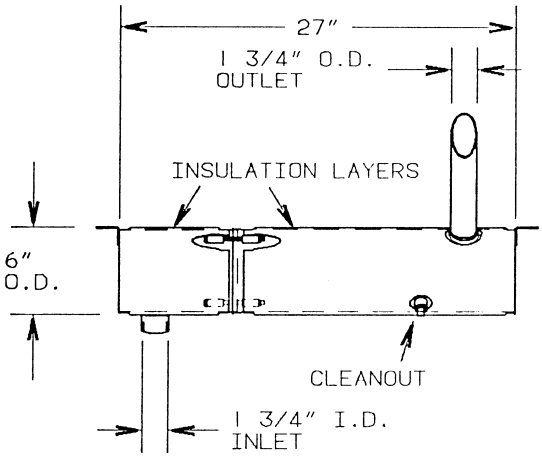

24752

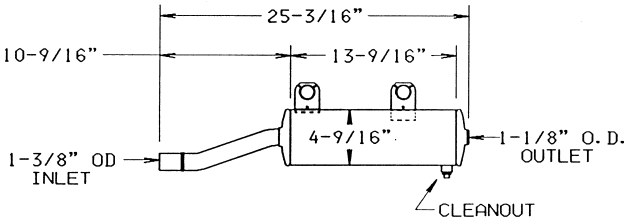

24756N

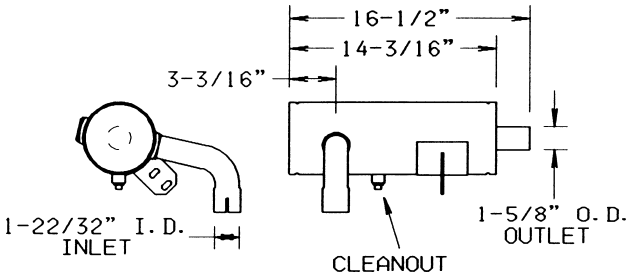

24800

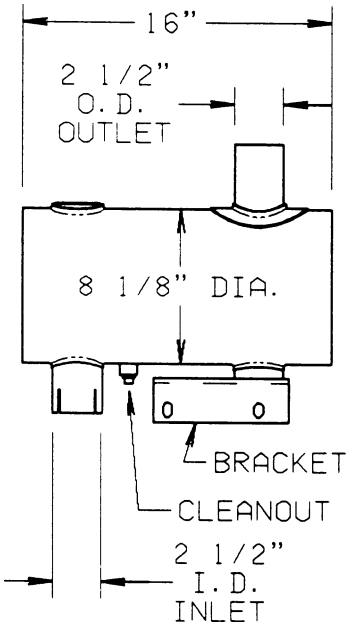

24839

NELSON *(continued)*

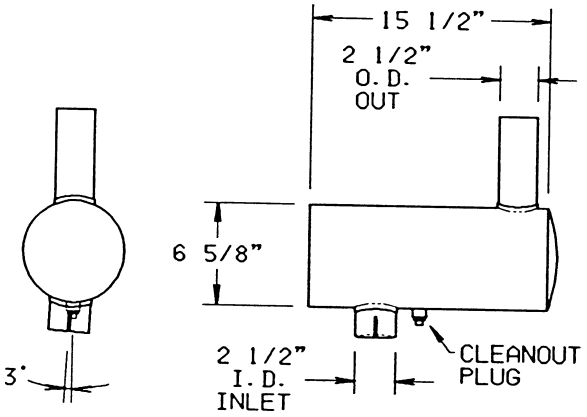

24842

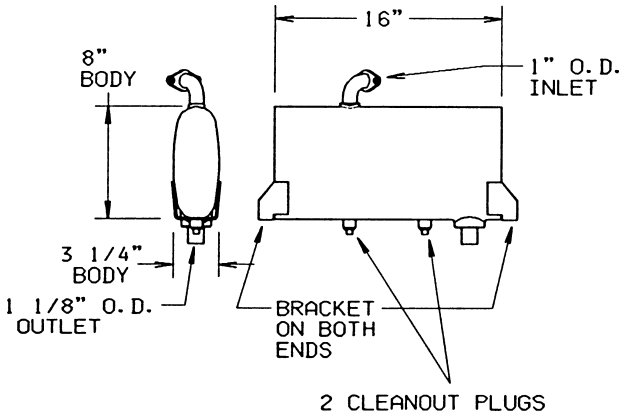

24866B

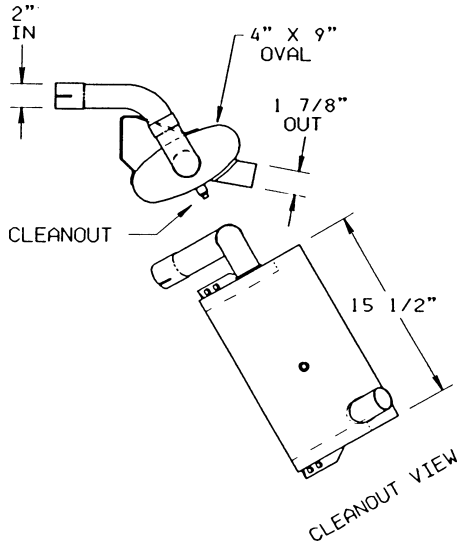

24931

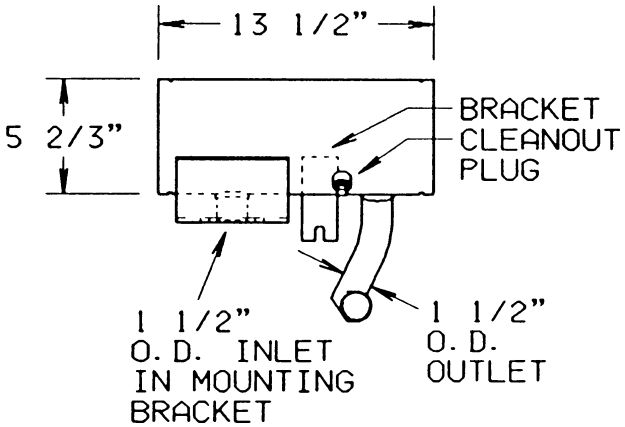

24953

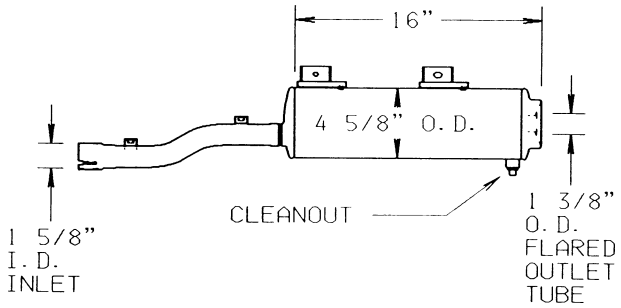

25007

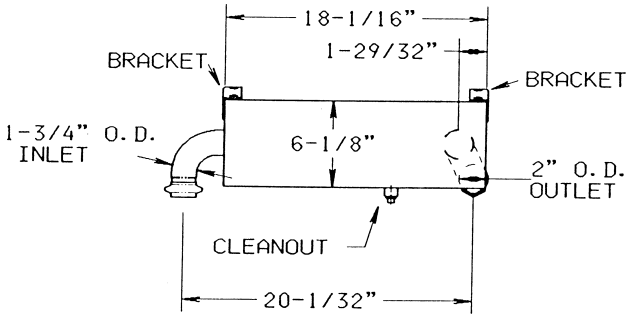

25012

NELSON *(continued)*

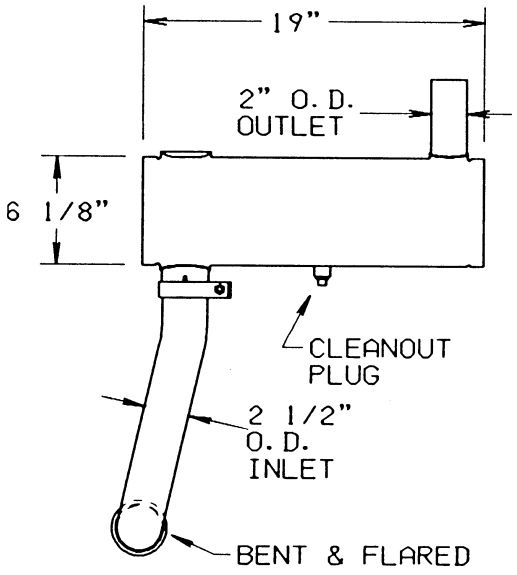

25026

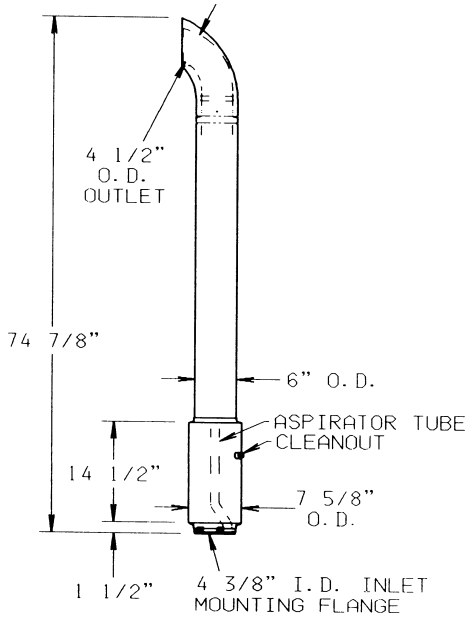

25133

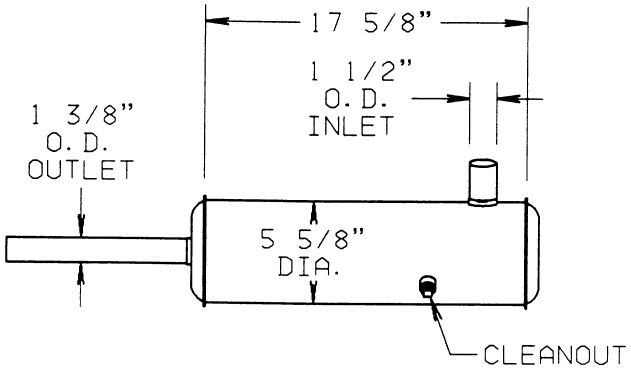

25191

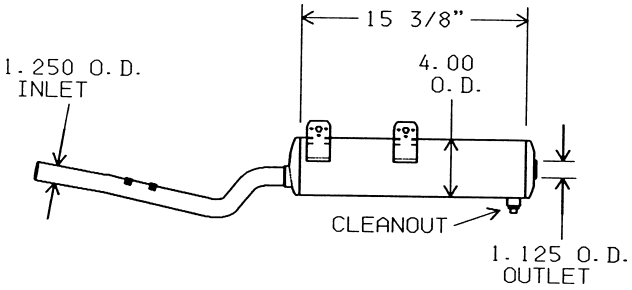

25237

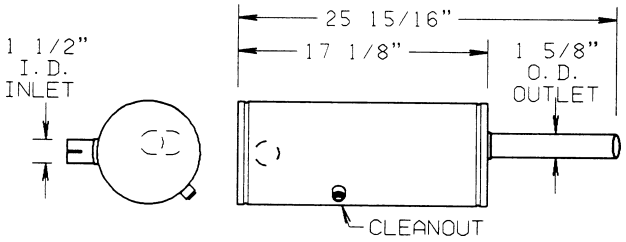

25239A

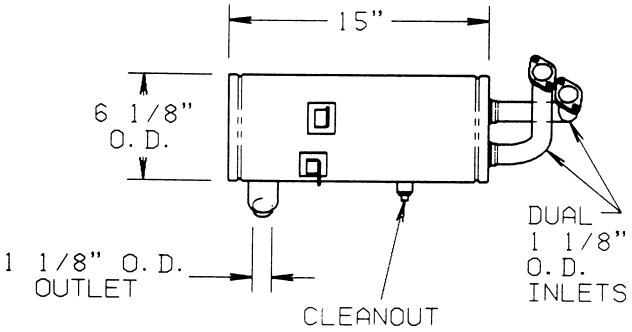

25602A

NELSON *(continued)*

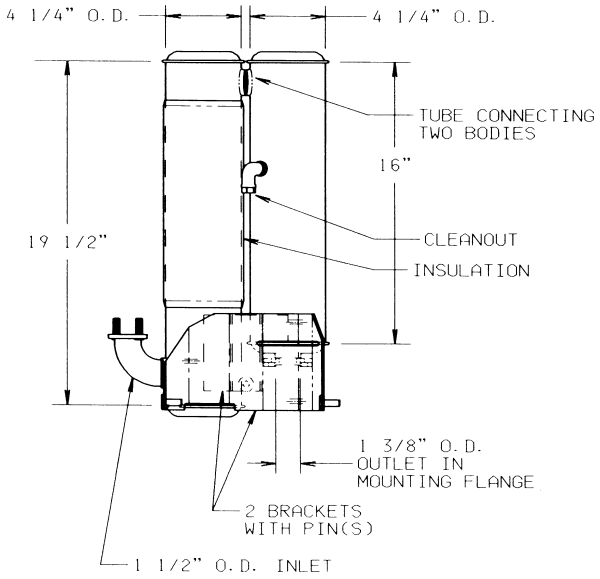

25640

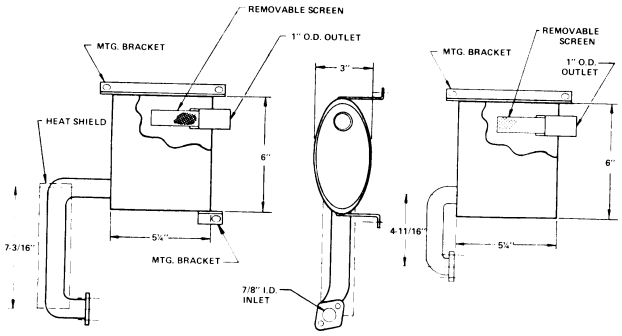

25766 SCREEN ASSEMBLY

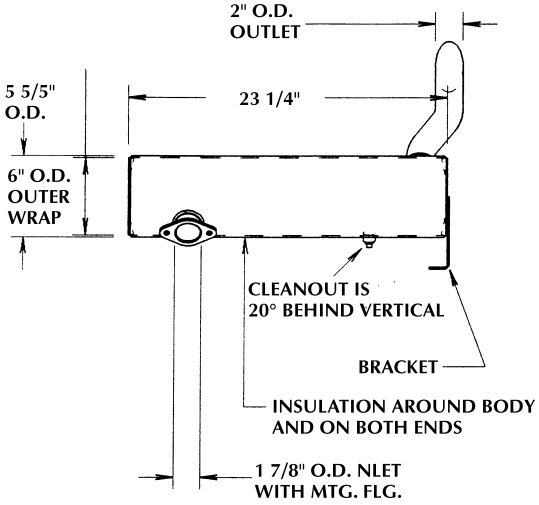

25771

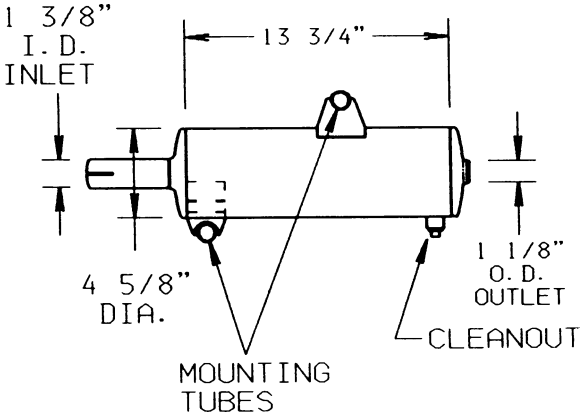

25868N

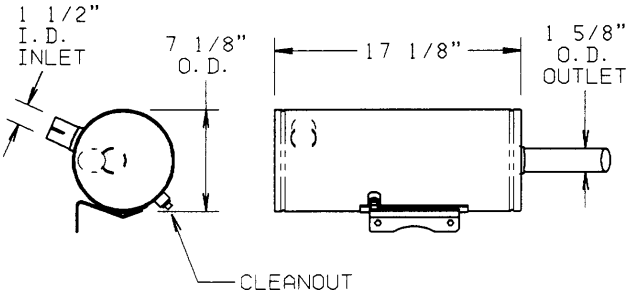

25986

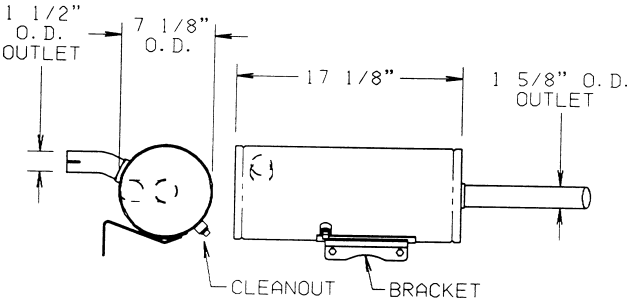

26147

NELSON *(continued)*

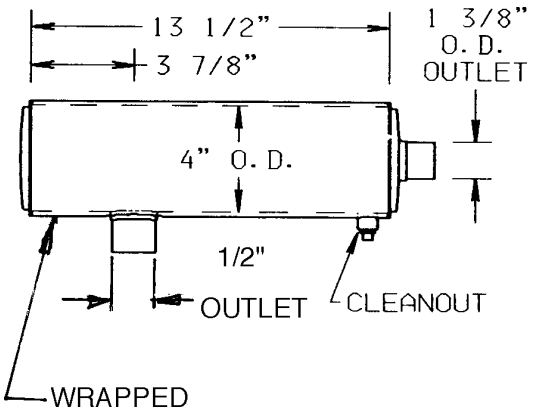

26201A

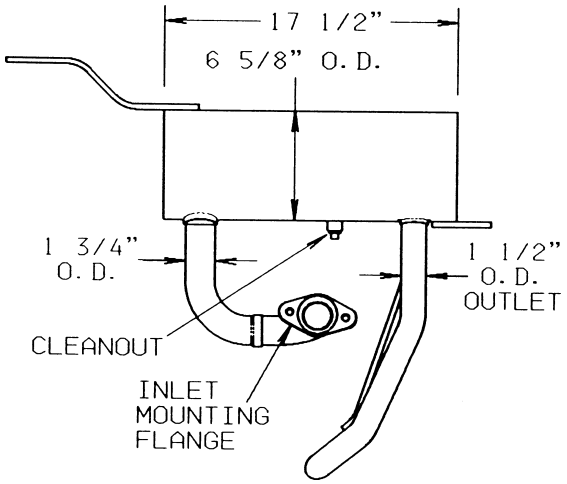

26294

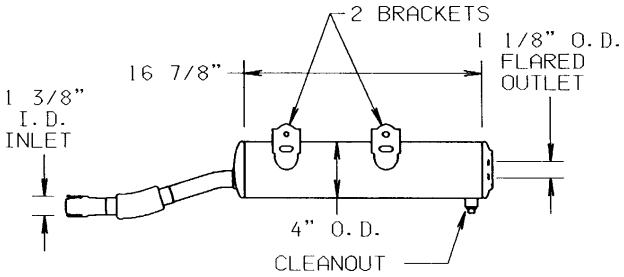

HONDA-NELSON 26296

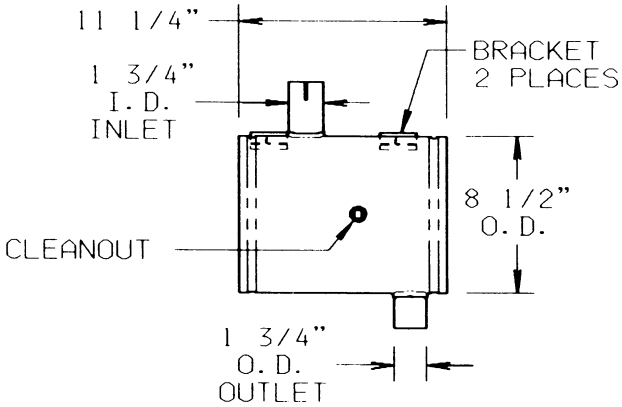

26359

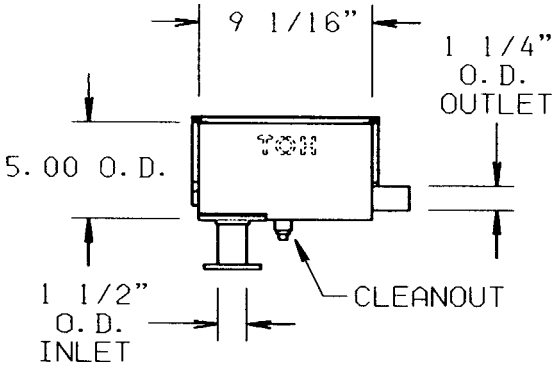

26438

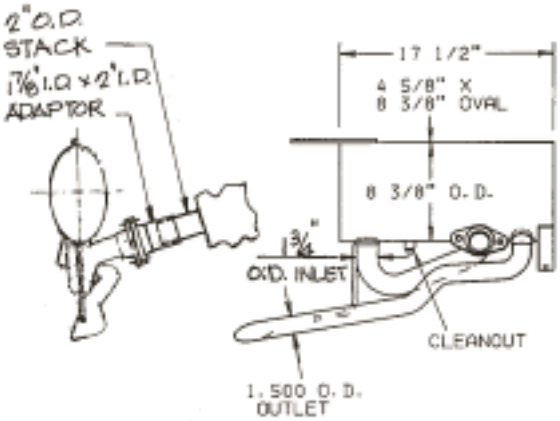

26454

NELSON *(continued)*

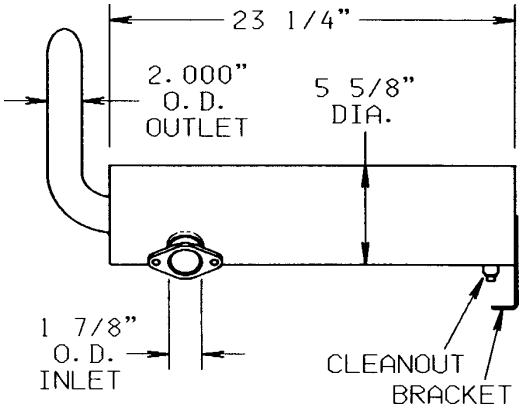

26465

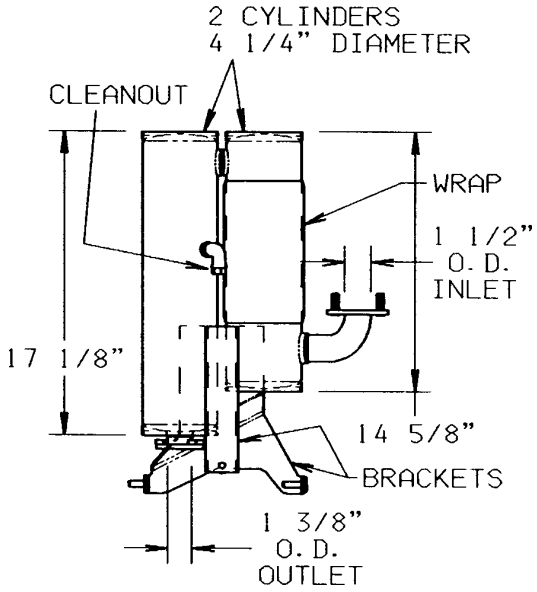

26503
ONAN 0155-3110

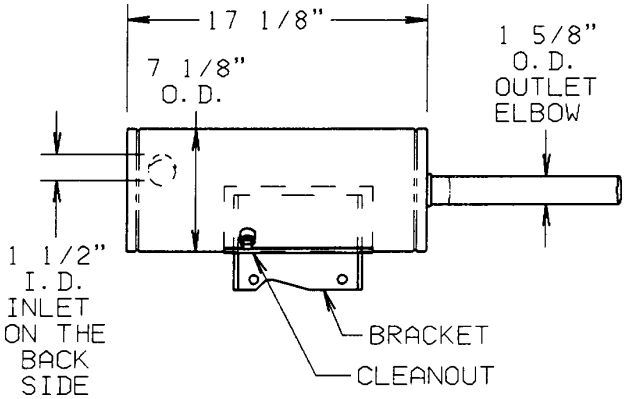

26617

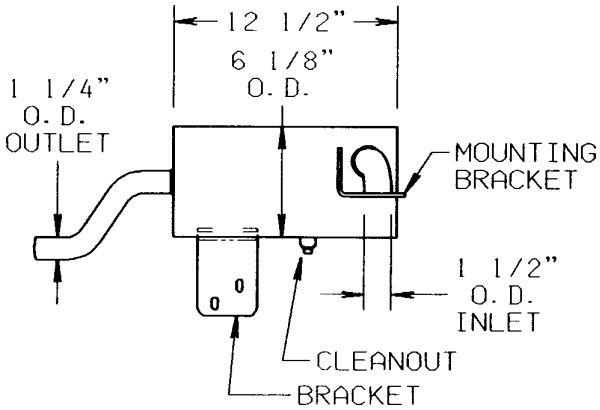

26749

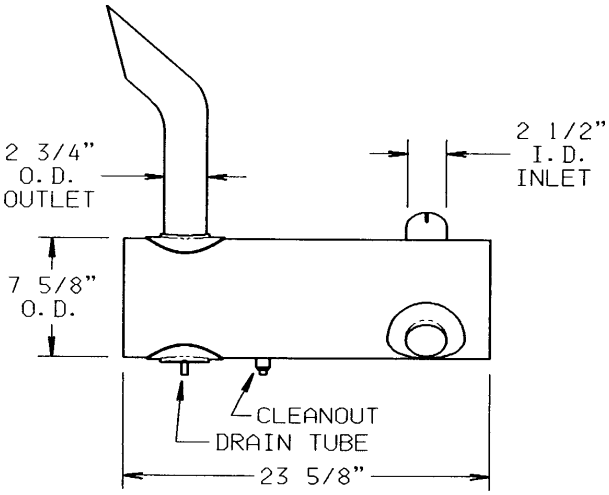

26875

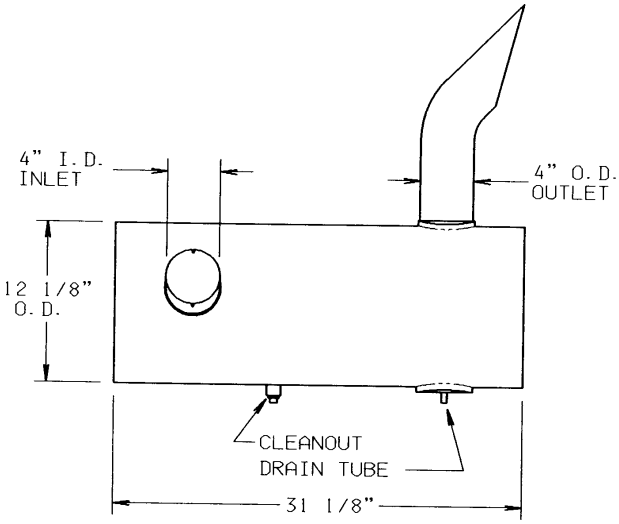

26876

NELSON *(continued)*

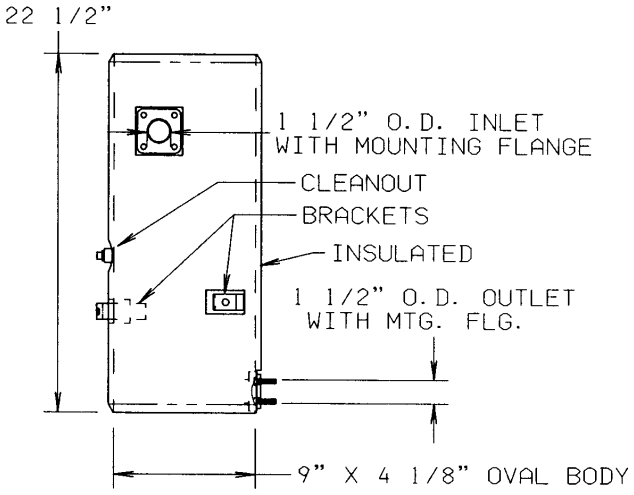

26897
ONAN 155-3151

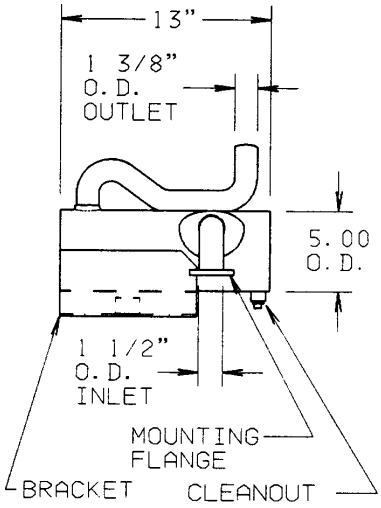

27021

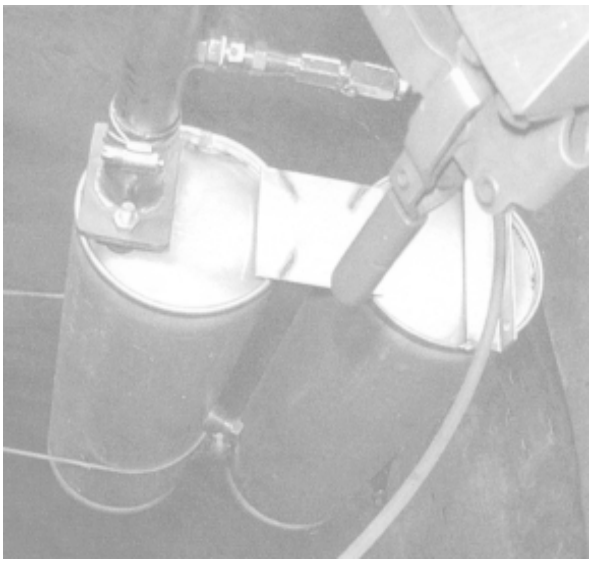

27137

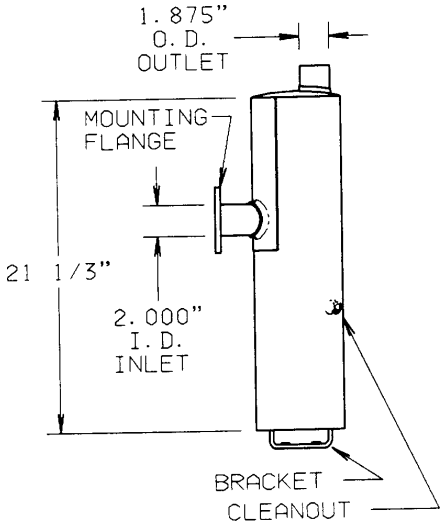

27173

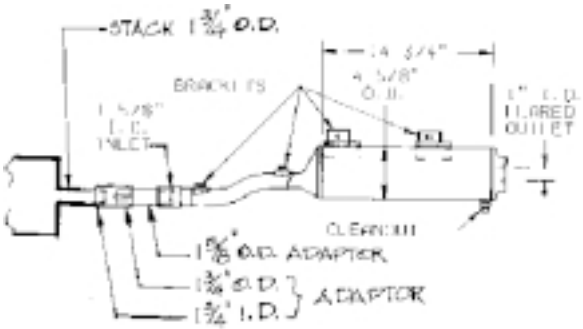

27174

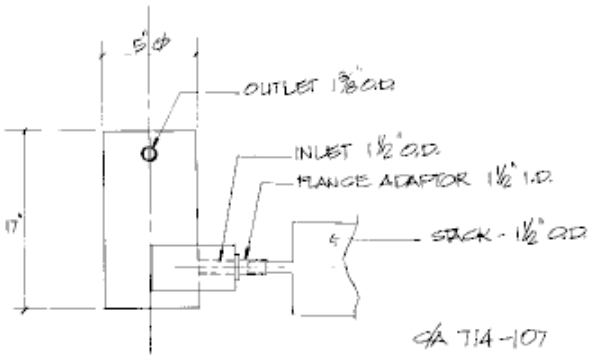

27196A

NELSON *(continued)*

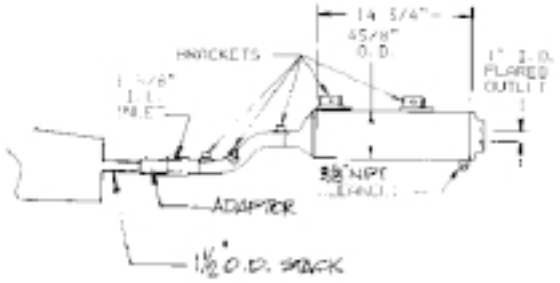

27222

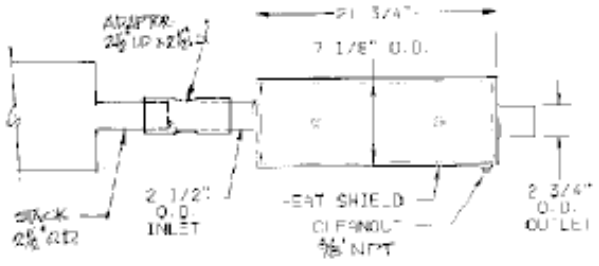

27404A

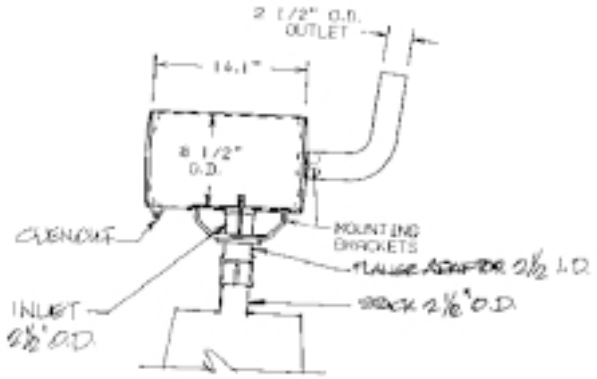

27453
27453A

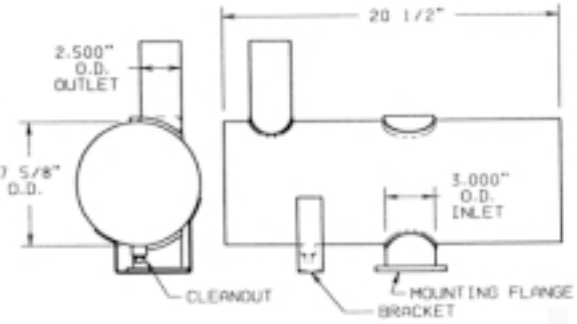

27475

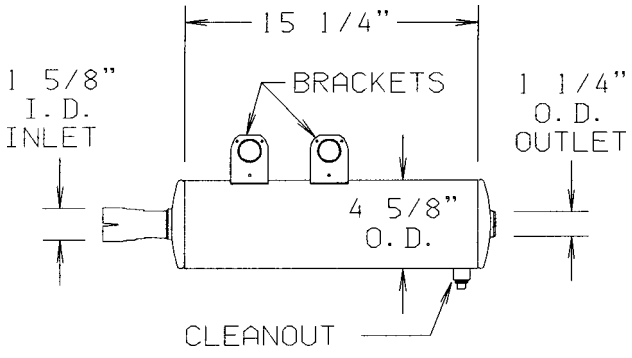

27522

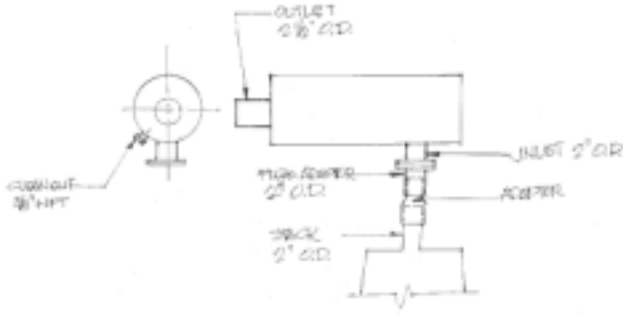

27543A

NELSON *(continued)*

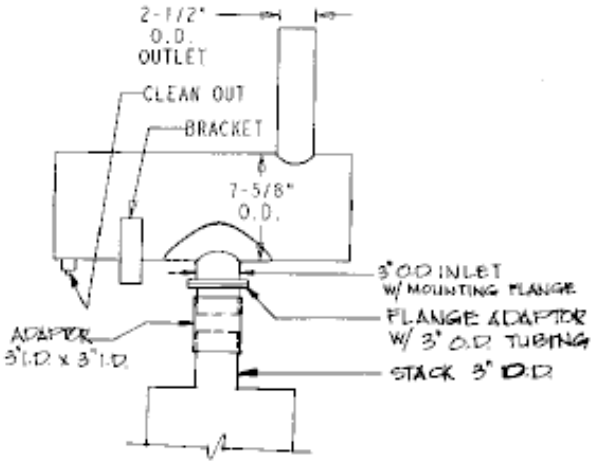

27692

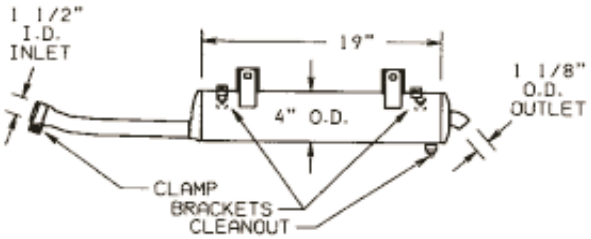

27780

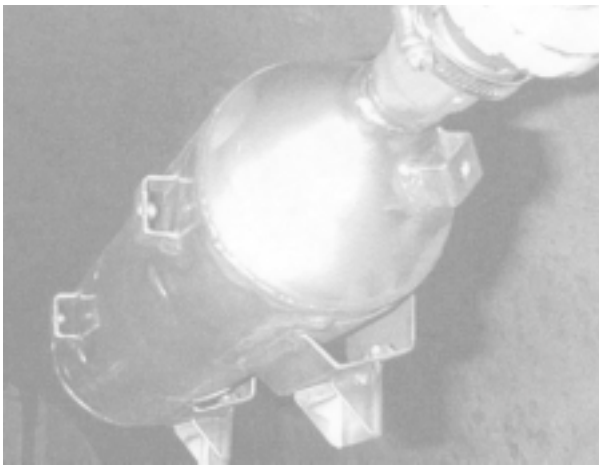

27890

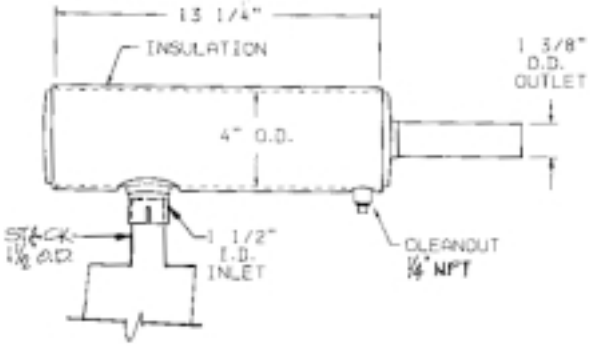

27901

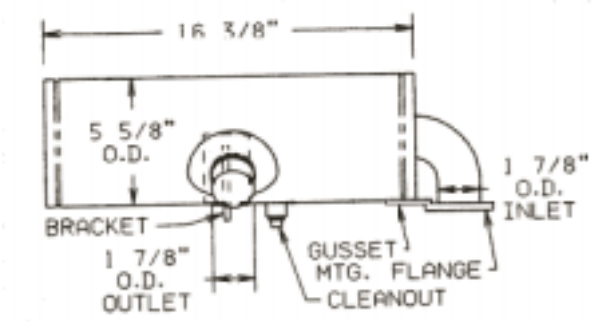

27906

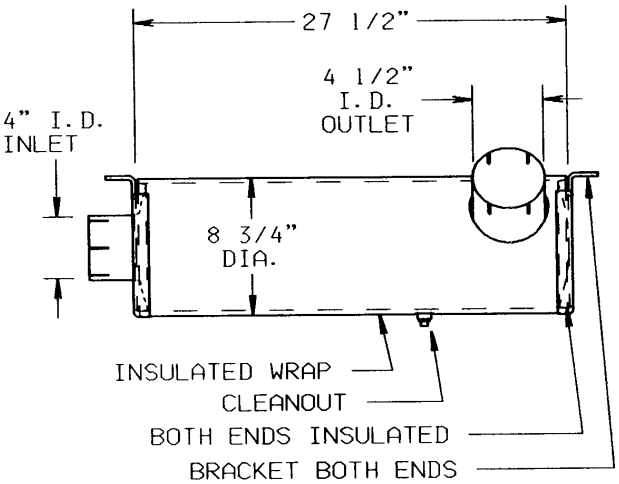

28057N

NELSON *(continued)*

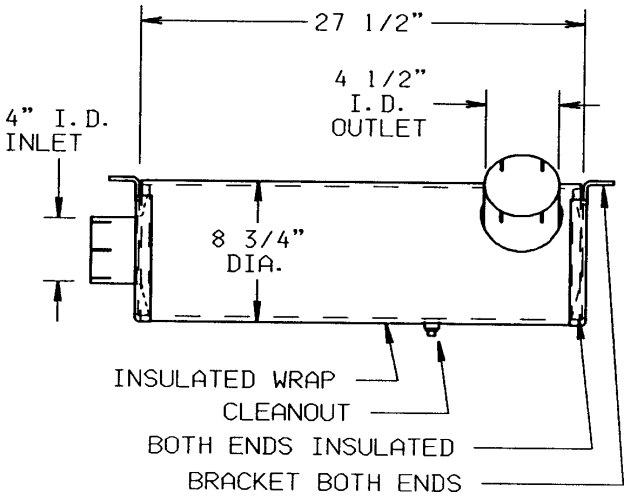

28061N

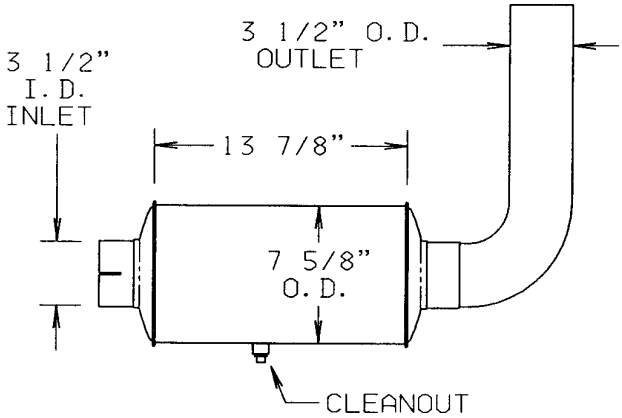

28070N

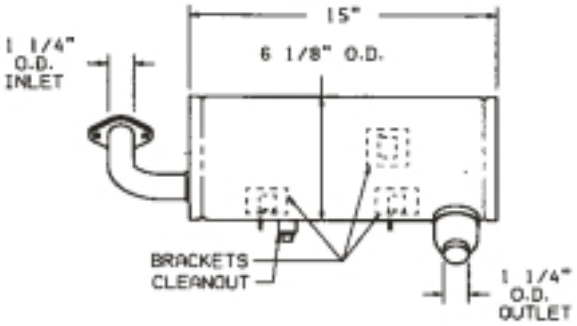

28151

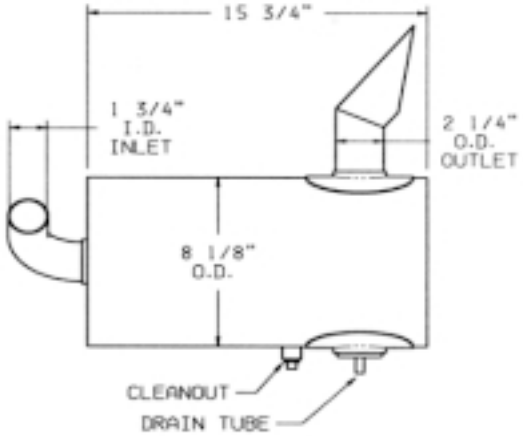

28186

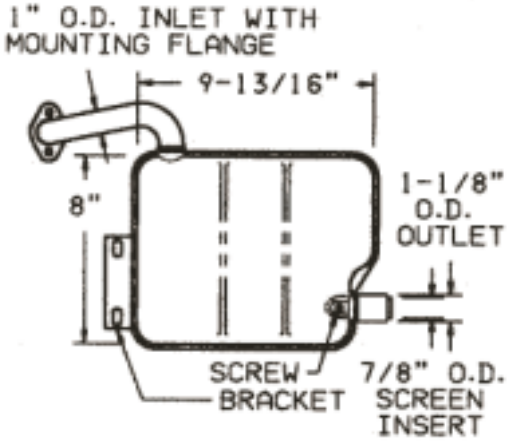

28416

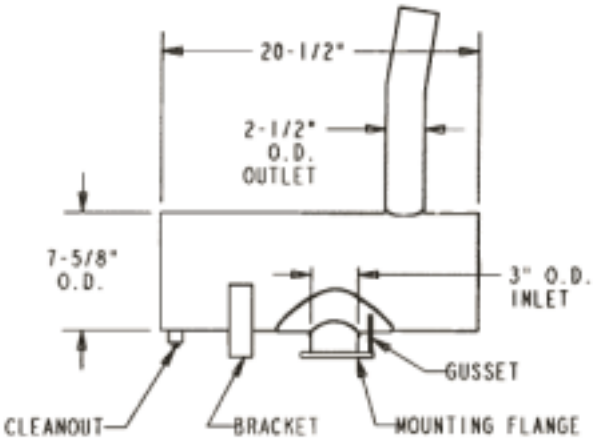

28457

NELSON *(continued)*

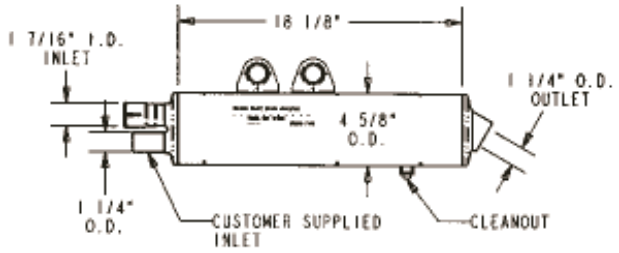

28472

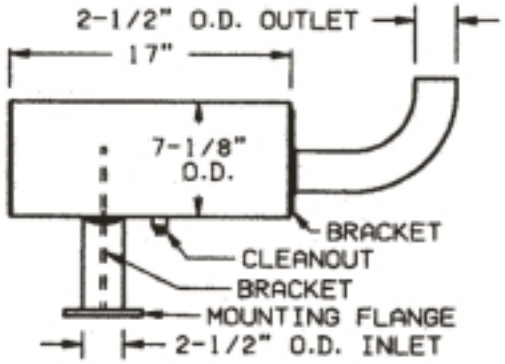

28478A
28479A

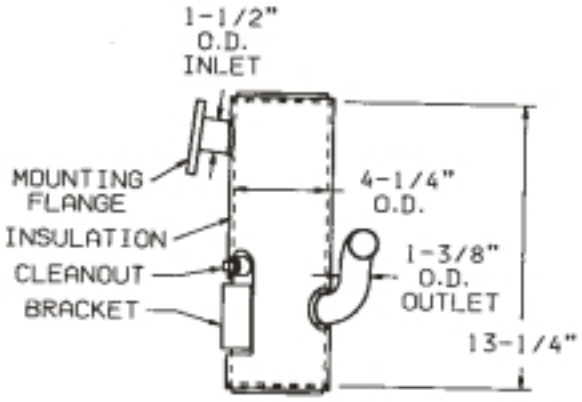

28619

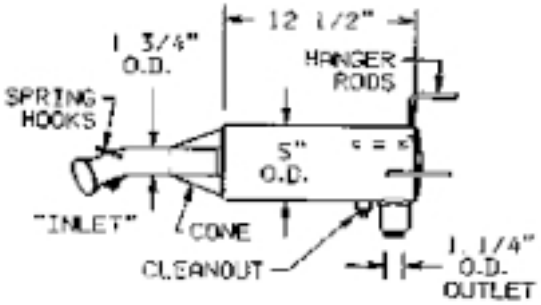

29222

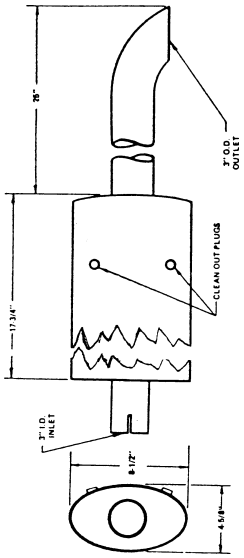

30134

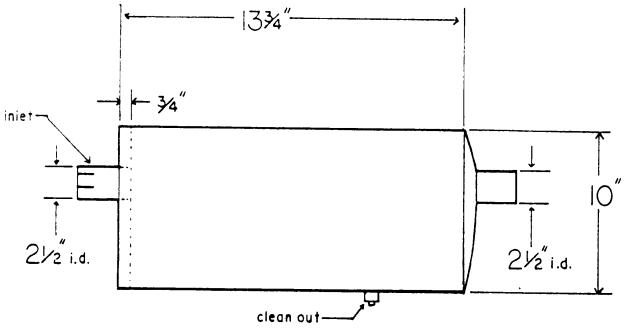

30670

NELSON *(continued)*

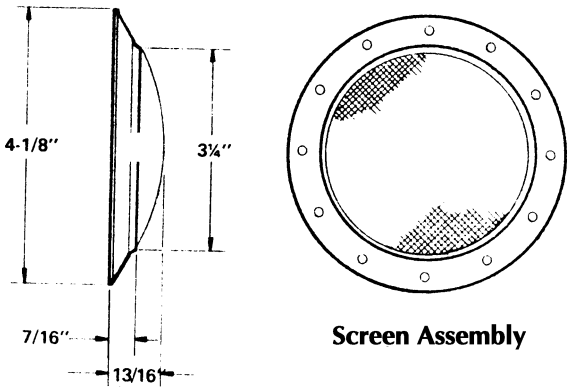

35347

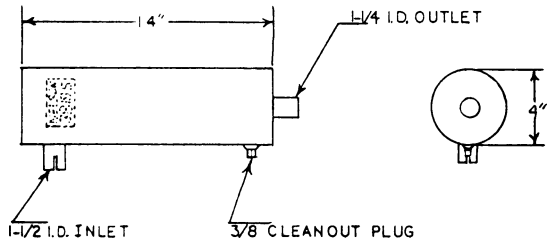

38195

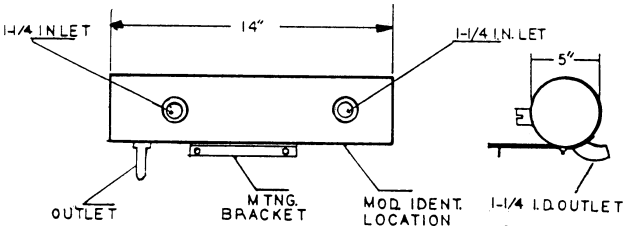

38196

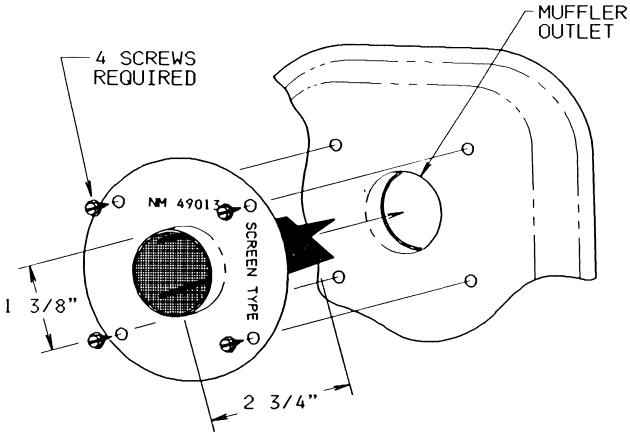

49013

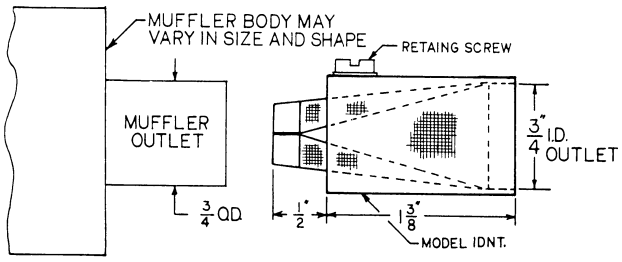

49017

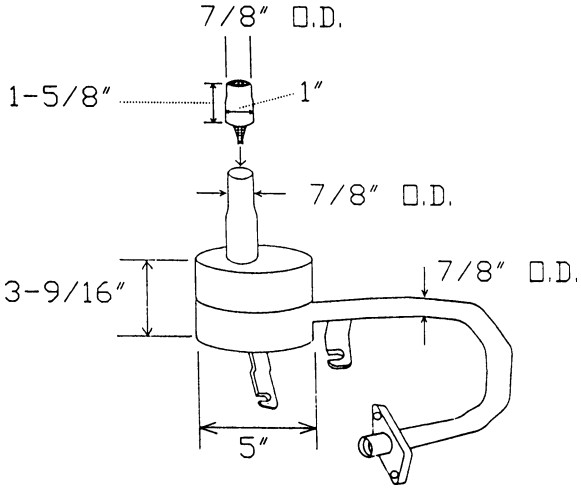

49019

NELSON *(continued)*

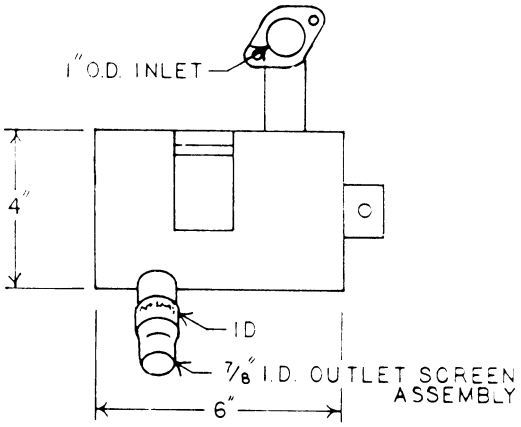

49020

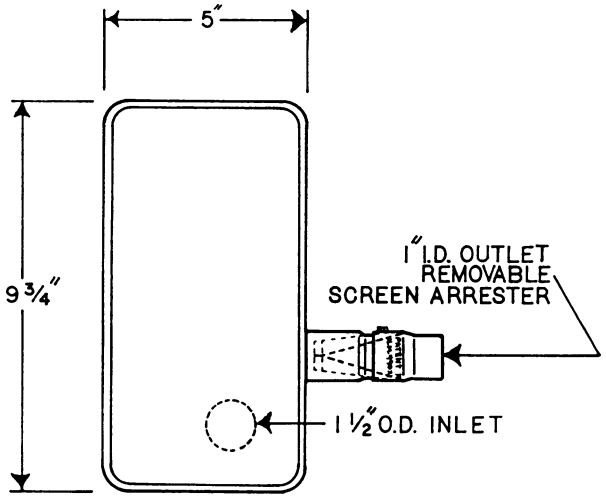

49021

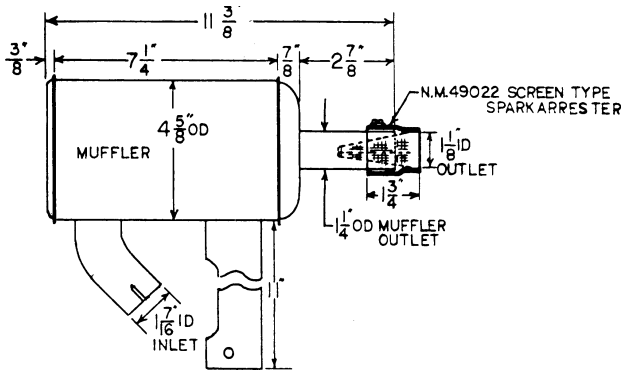

49022

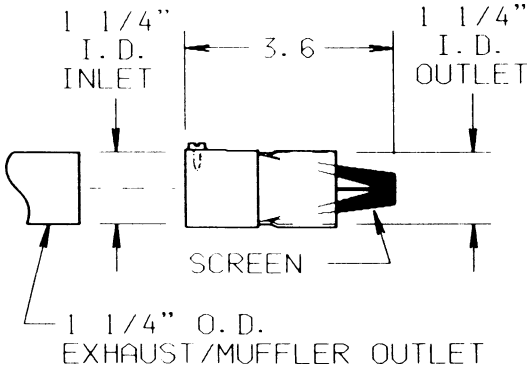

49022G

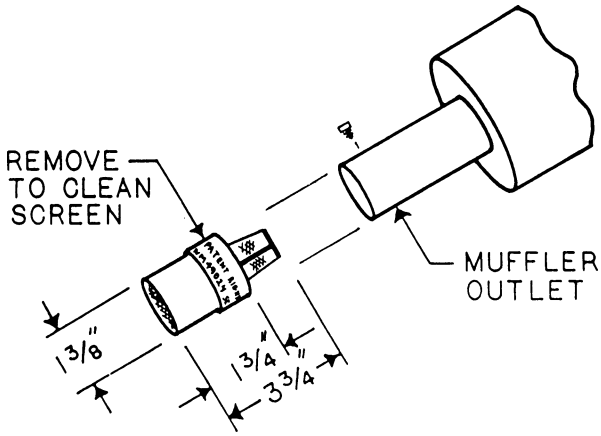

49024

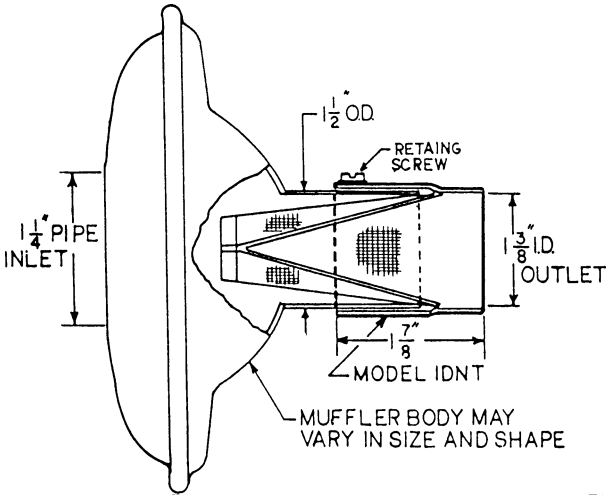

49025

NELSON *(continued)*

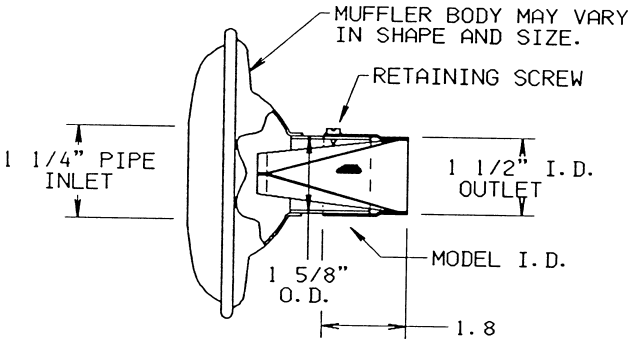

49026

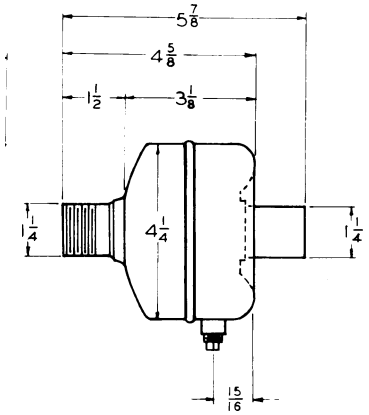

49110
T-9458

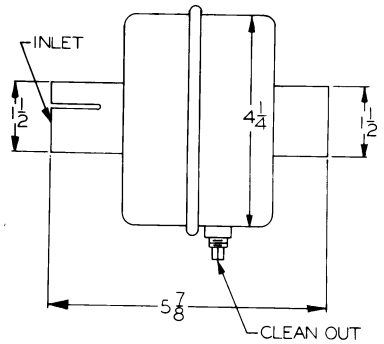

49114
T-14123

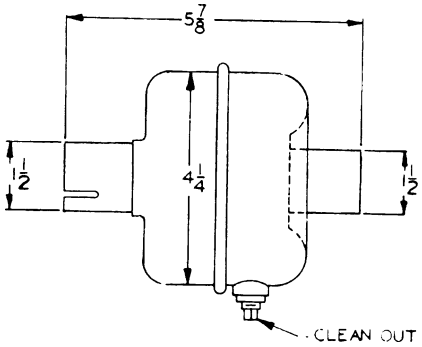

49115
49115C

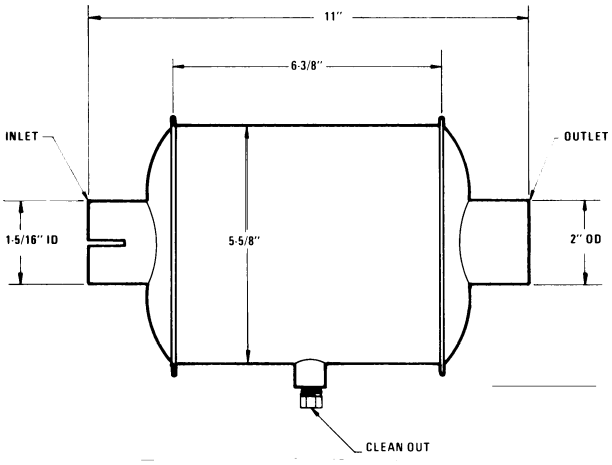

49119

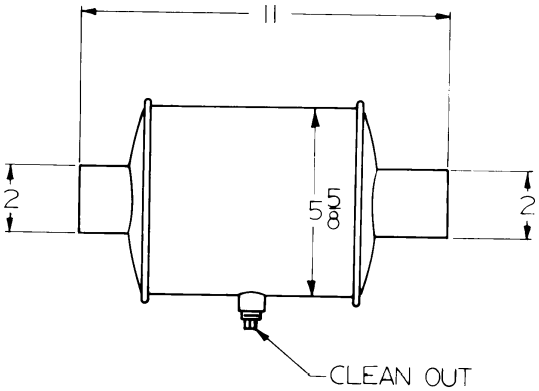

49120

Nelson 49120F—see 49120
Inlet may vary 2" I.D. to 2-1/4" I.D.
Outlet may vary 2" O.D. to 2-1/4" I.D.

NELSON *(continued)*

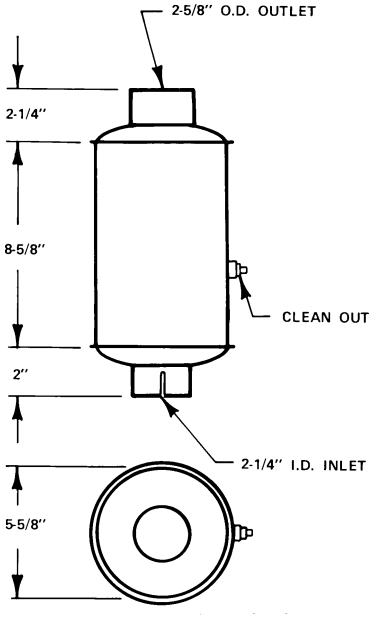

49124

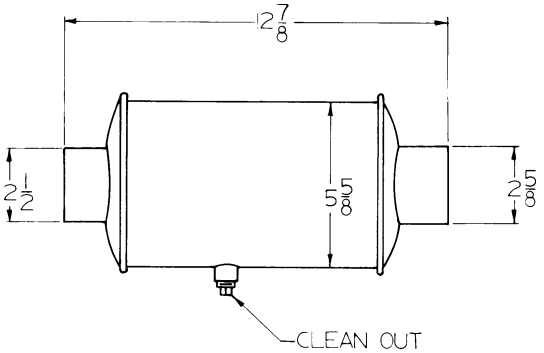

49125

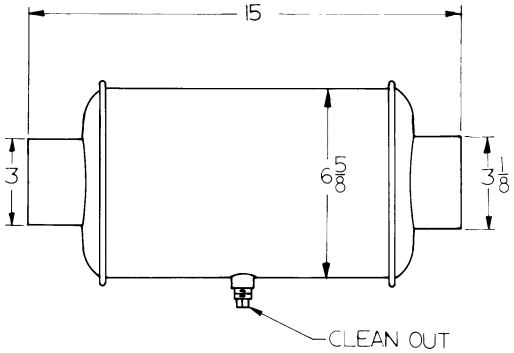

49130

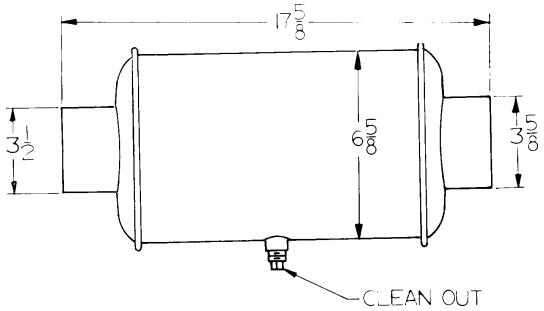

49135

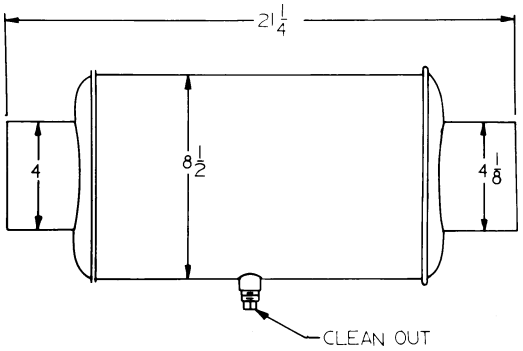

49140

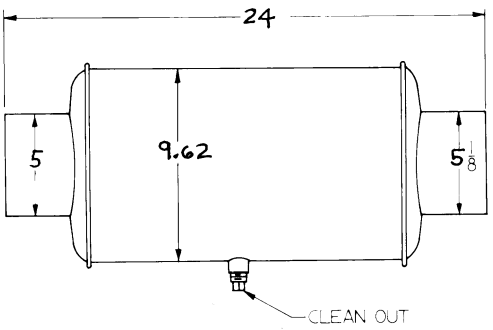

49150

NELSON *(continued)*

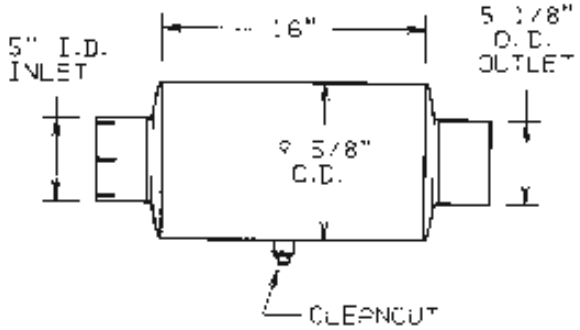

49150U

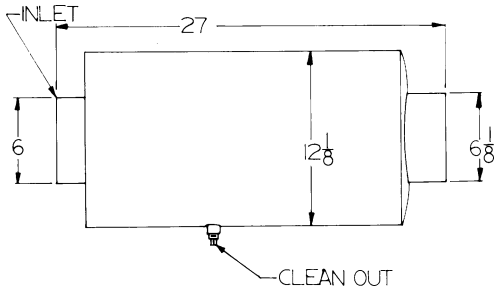

49160

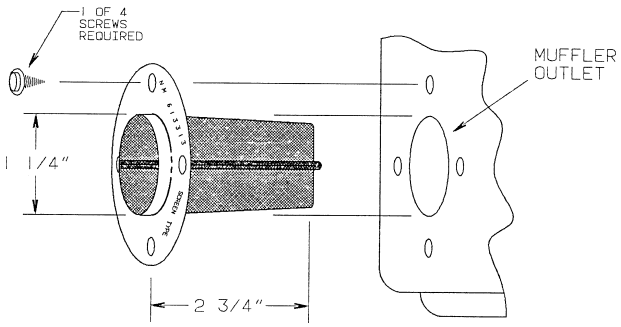

613313

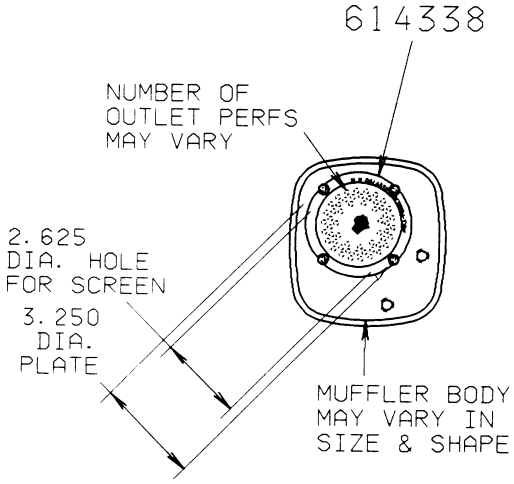

614338

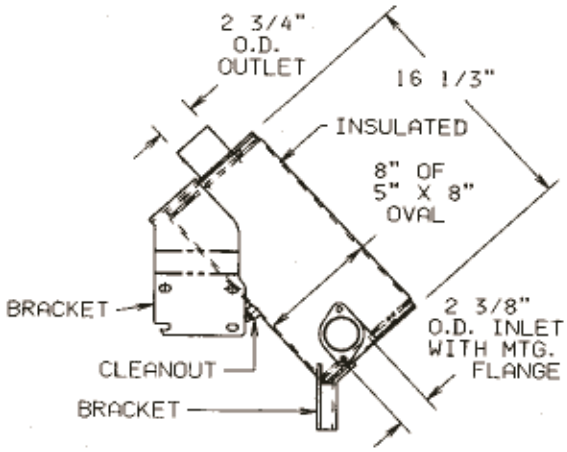

NM28533

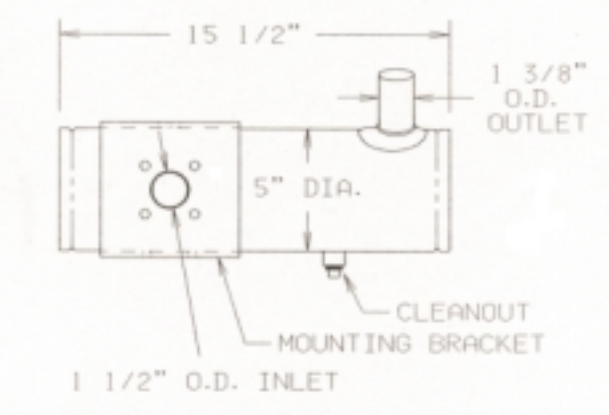

NM28878

NELSON *(continued)*

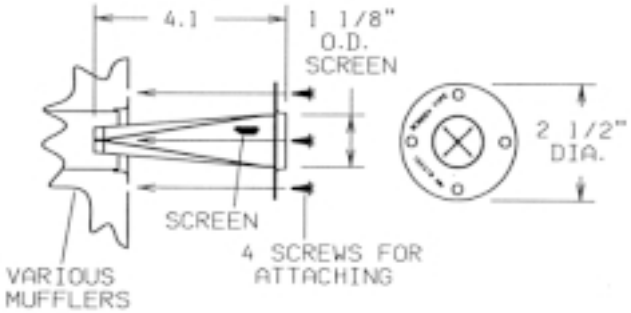

NM615351

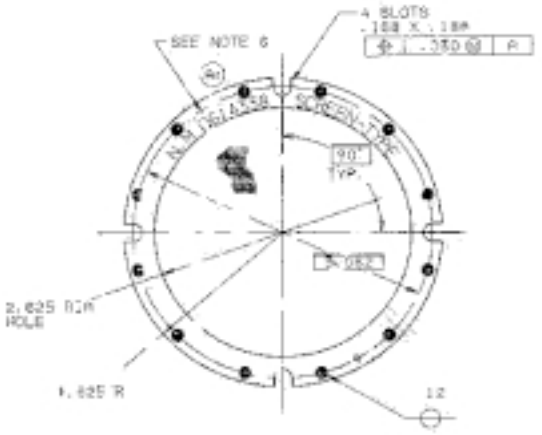

Q614338

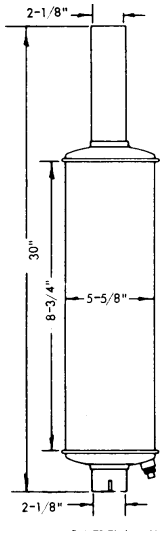

T-6277

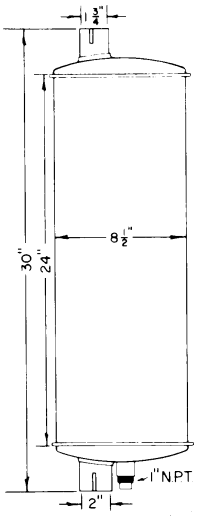

T-7033

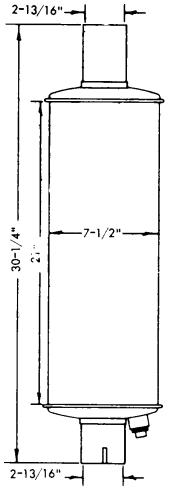

T-7359

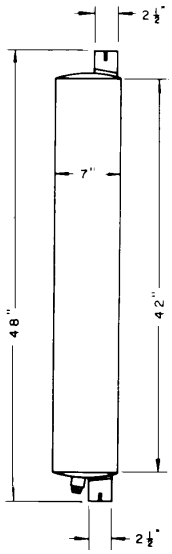

T-7515

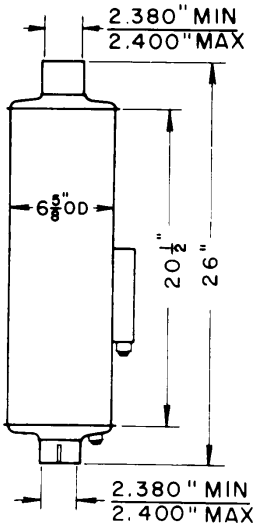

T-8680

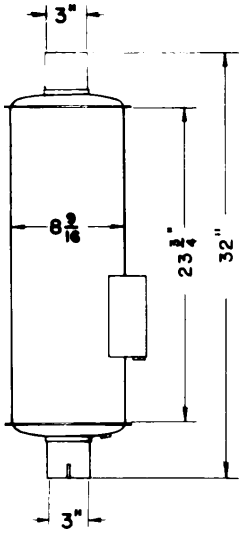

T-8714

NELSON *(continued)*

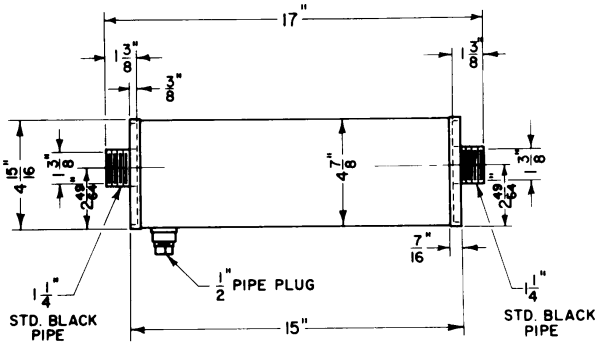

T-9098

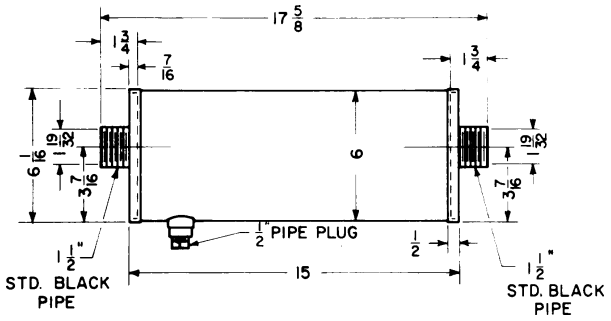

T-9099

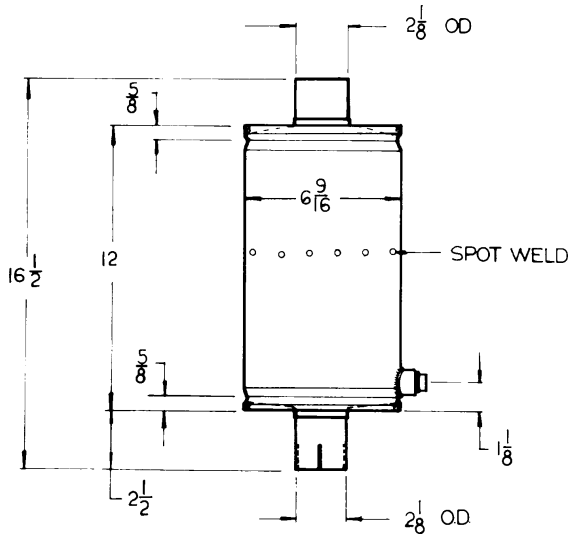

T-9213

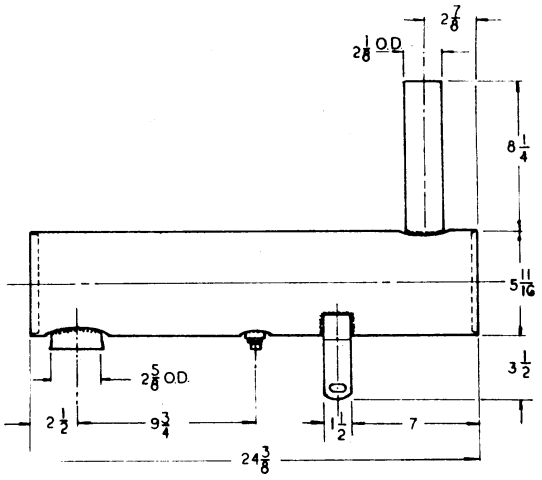

T-9219

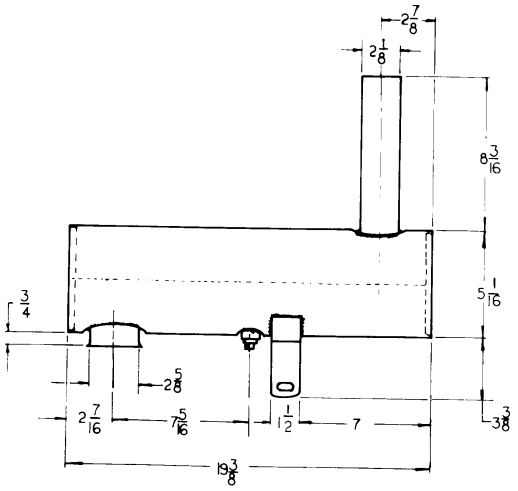

T-9220

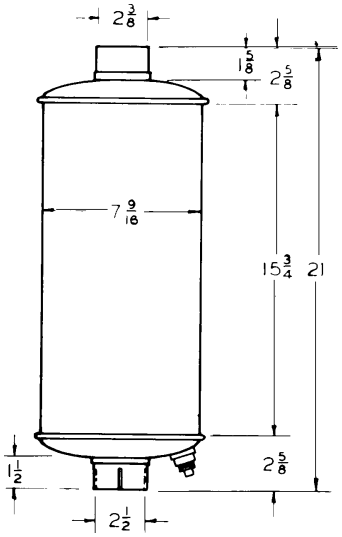

T-9304

NELSON *(continued)*

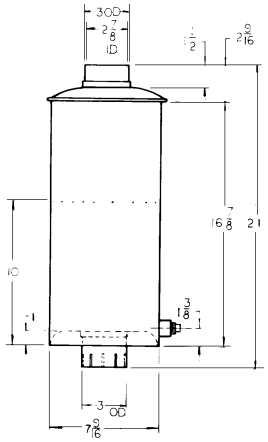

T-9356

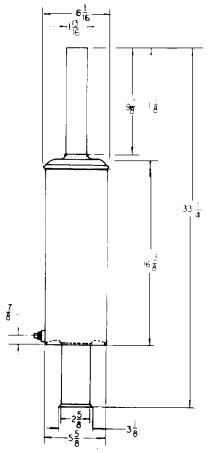

T-9370

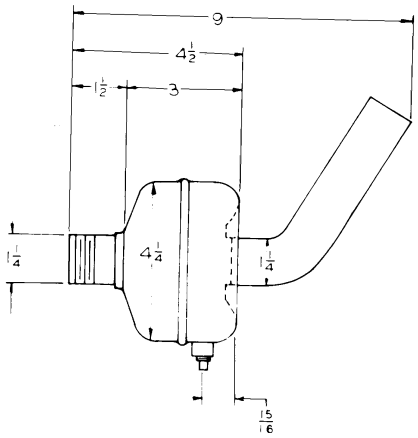

T-9457

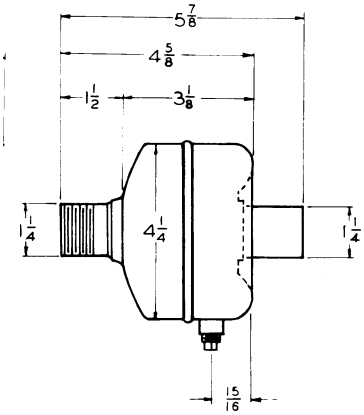

T-9458
49110

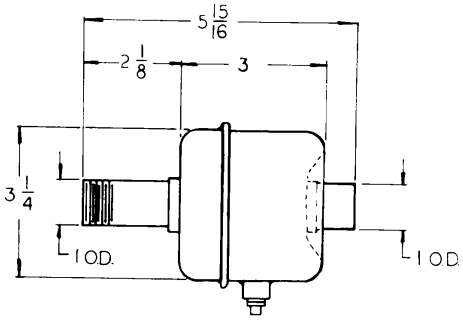

T-9460

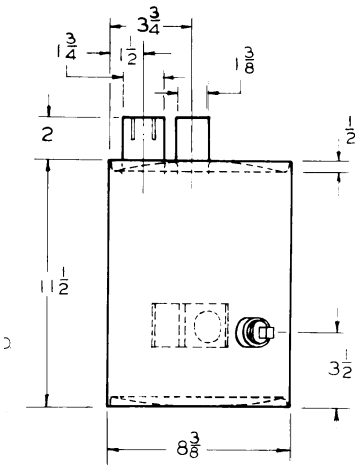

T-9489

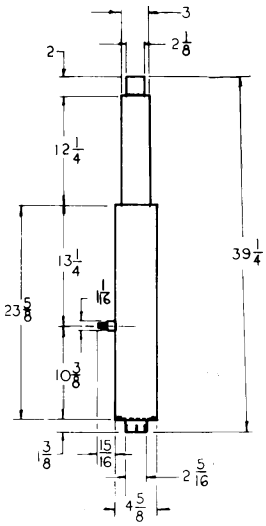

T-9605

NELSON *(continued)*

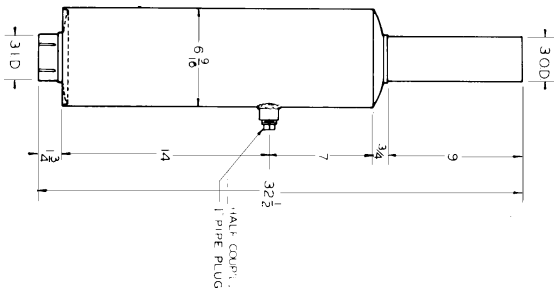

T-9932

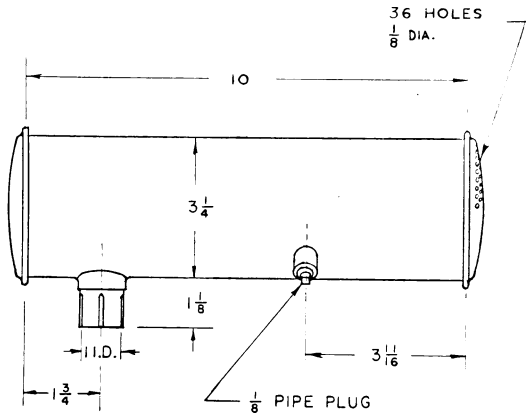

T-9995

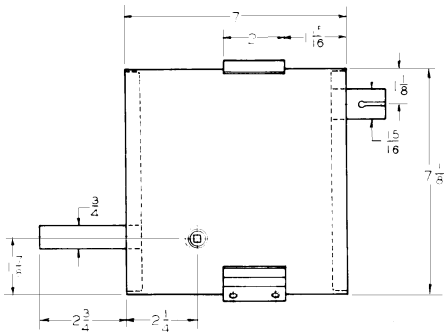

T-10093

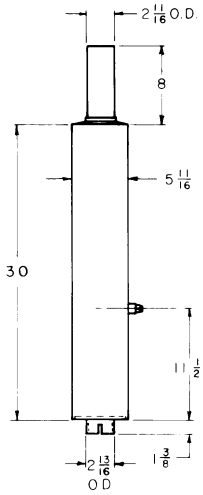

T-10115
T-12502

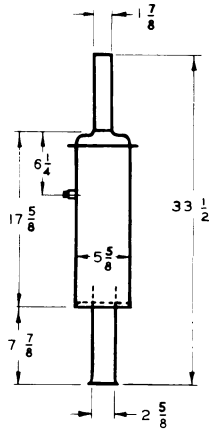

T-10126

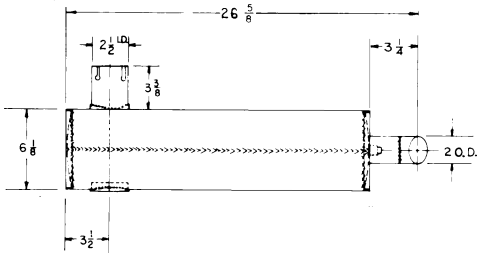

T-10213

NELSON *(continued)*

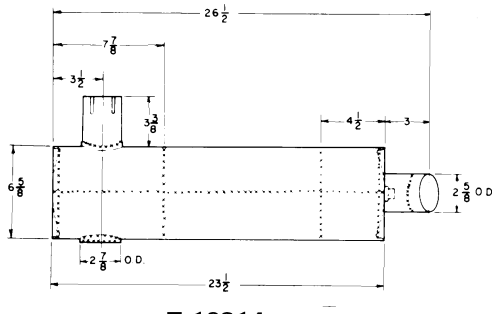

T-10214

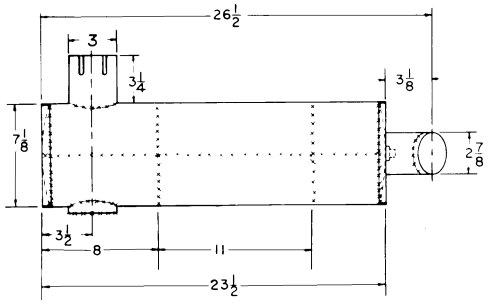

T-10215

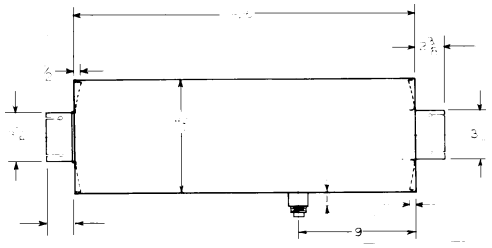

T-10244

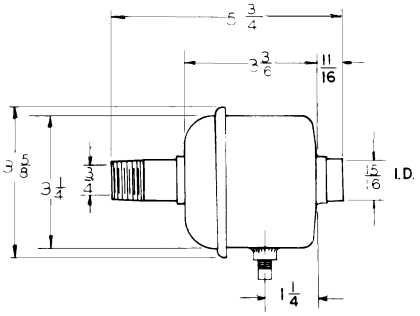

T-10291
T-13944

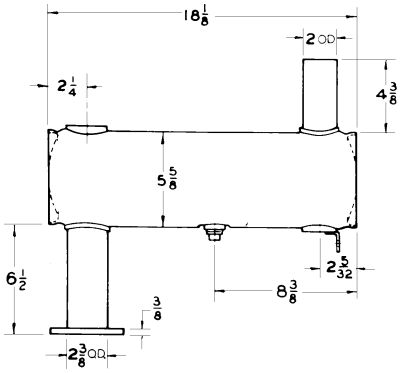

T-10374

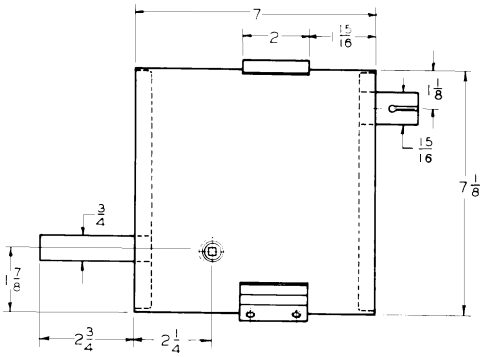

T-10409

NELSON *(continued)*

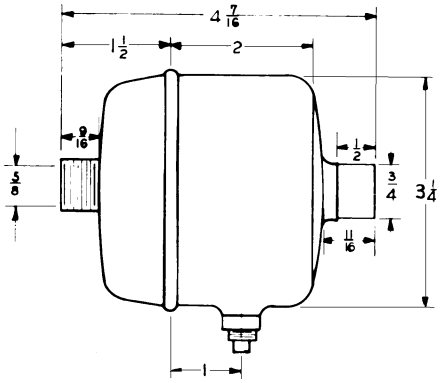

T-10705

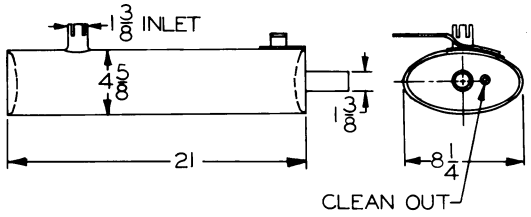

T-10792

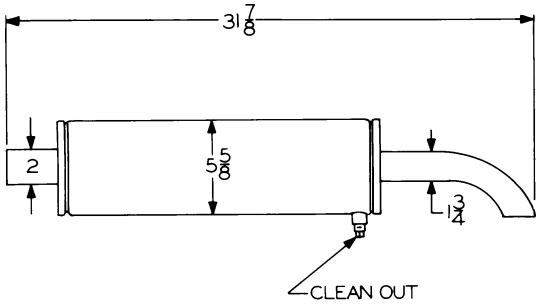

T-10860

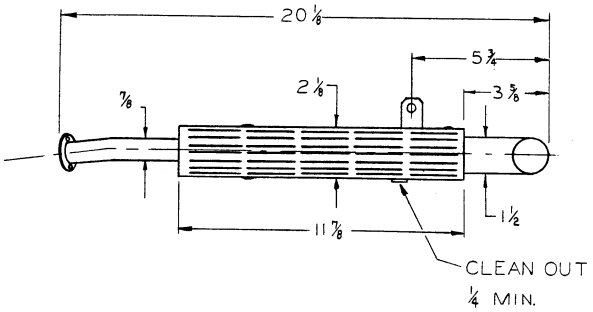

T-10895

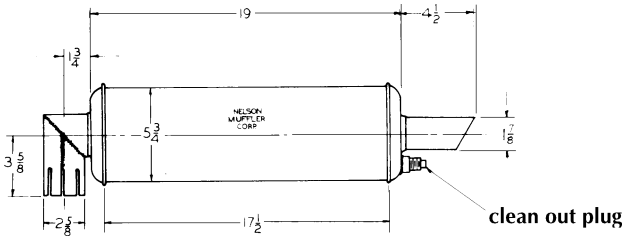

T-10897

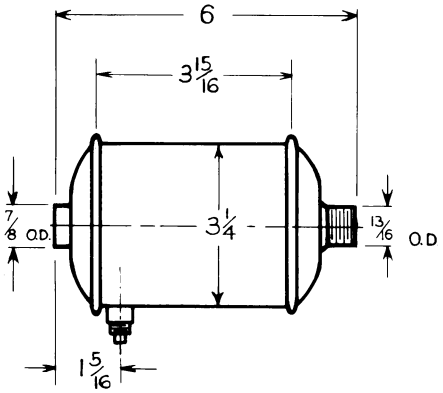

T-10898

NELSON *(continued)*

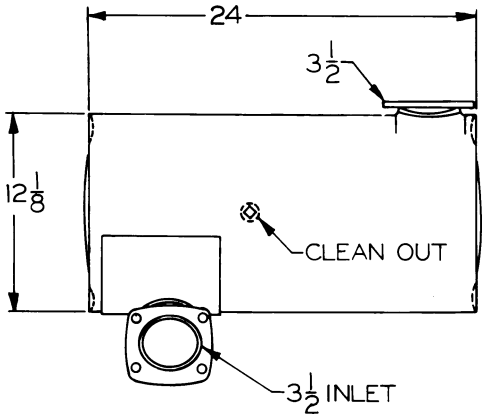

T-10956
T-11842

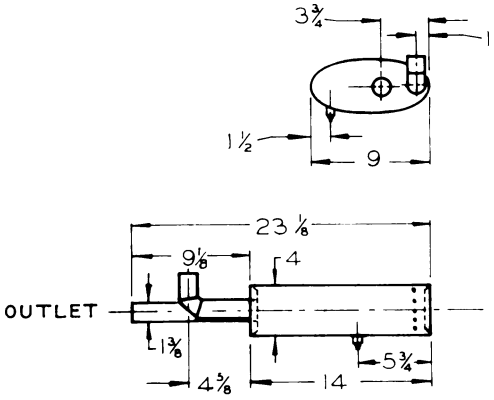

T-11068C
T-11159

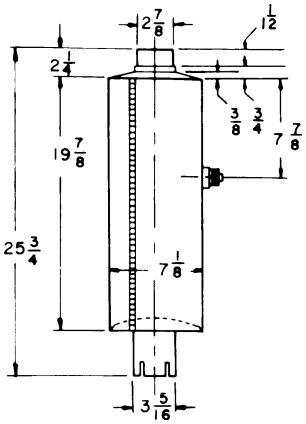

T-11145

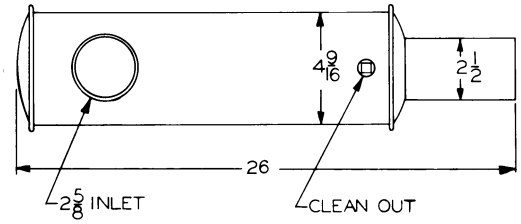

T-11336

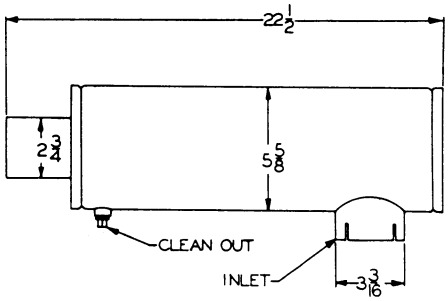

T-11337

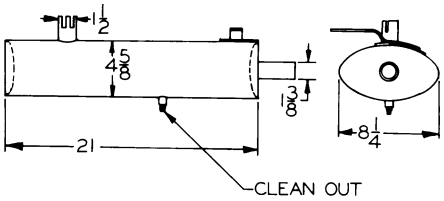

T-11424

NELSON *(continued)*

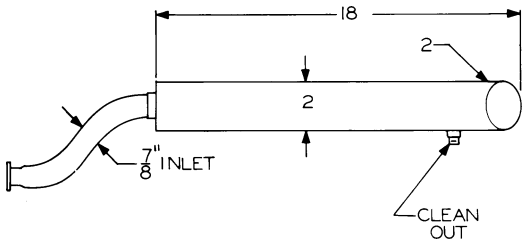

T-11601C

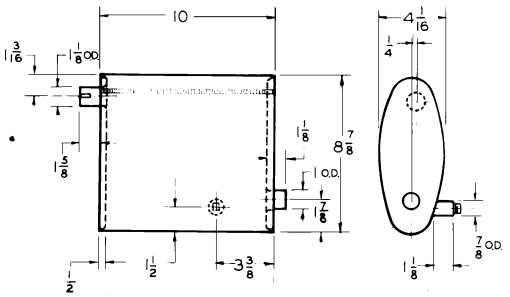

T-11606

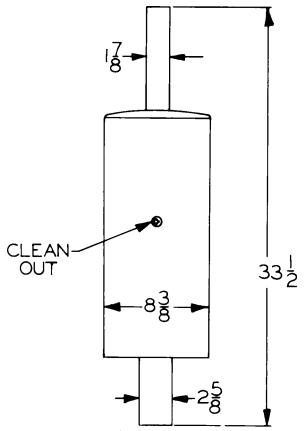

T-11668

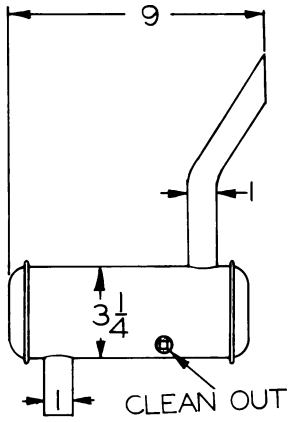

T-11708
(P/N NMC-T-11892)

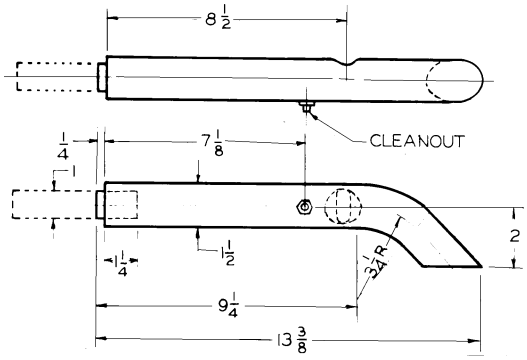

T-1173H

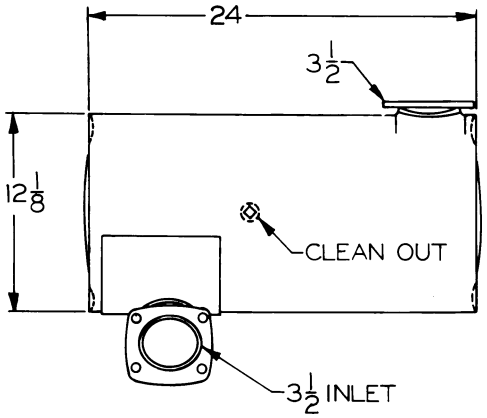

T-11842
T-10956

NELSON *(continued)*

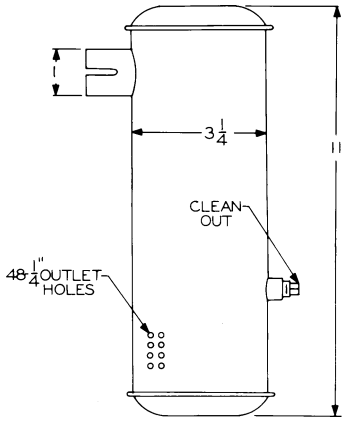

T-11915

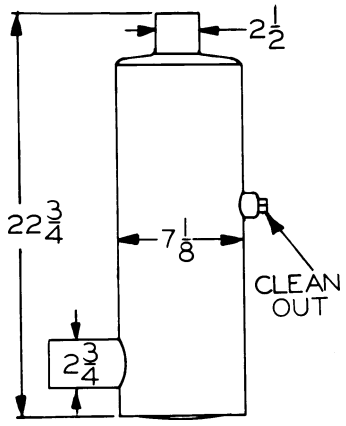

T-11927

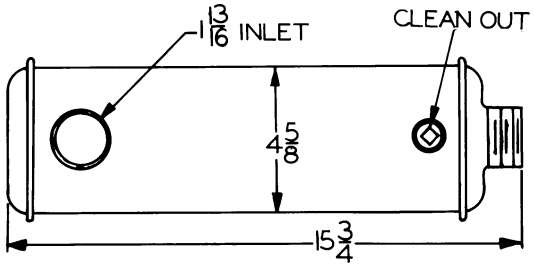

T-11976

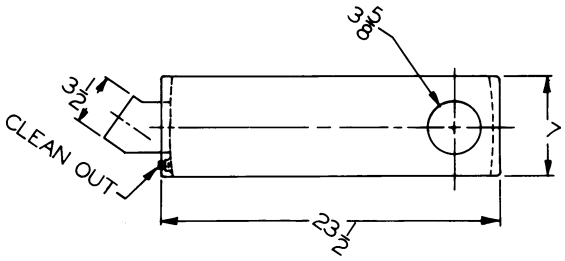

T-12499

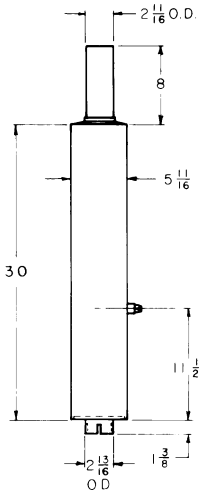

T-12502
T-10115

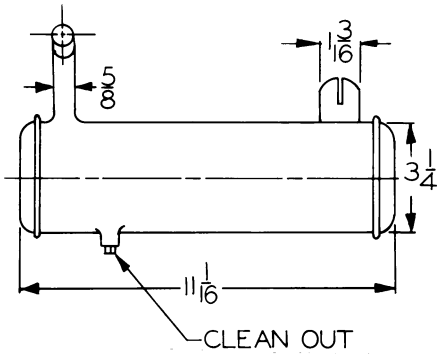

T-12760B

NELSON *(continued)*

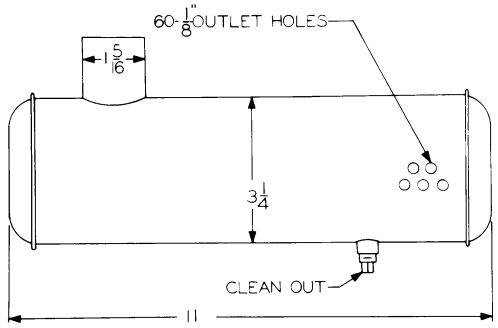

T-12761

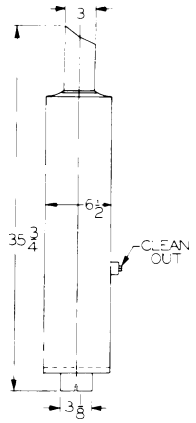

T-12818

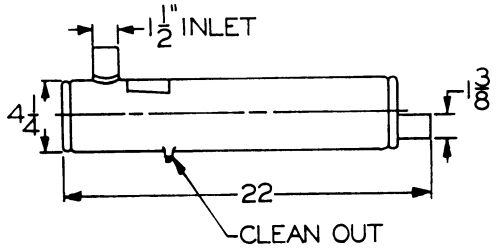

T-12825F

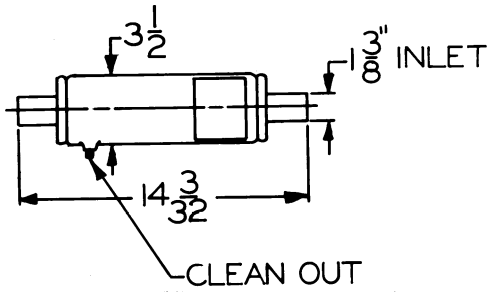

T-12863

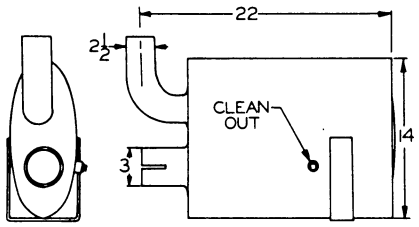

T-13109

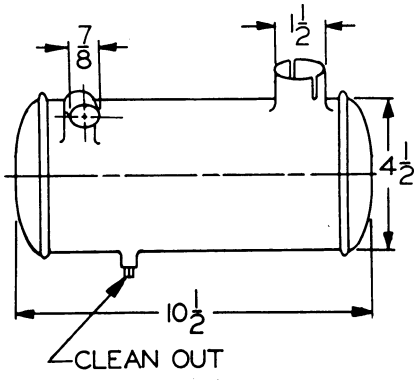

T-13265

NELSON *(continued)*

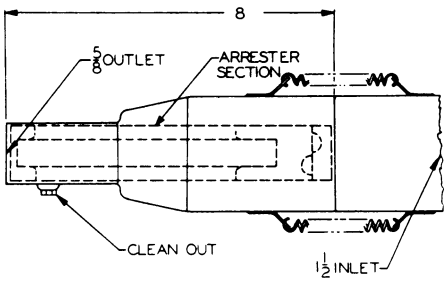

T-13300

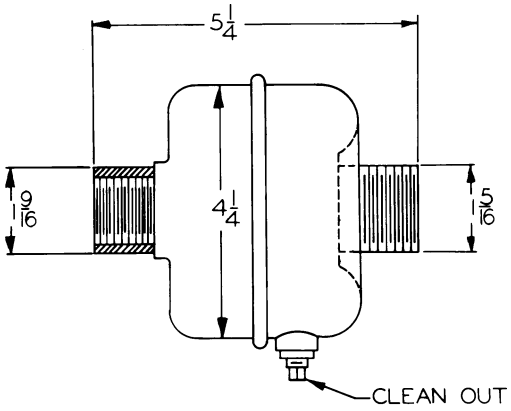

T-13304

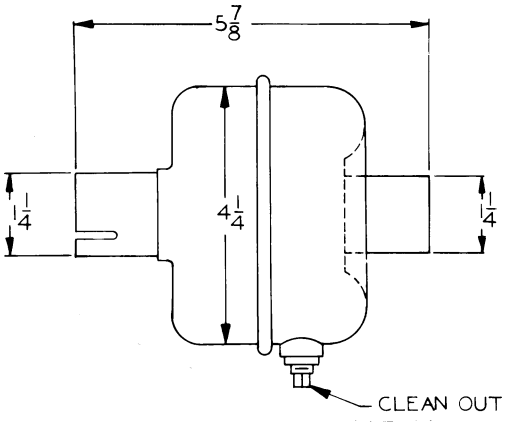

T-13376

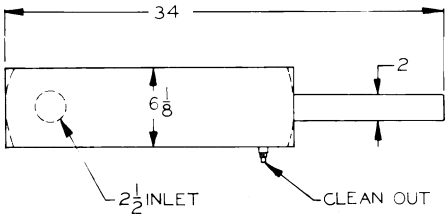

T-13473

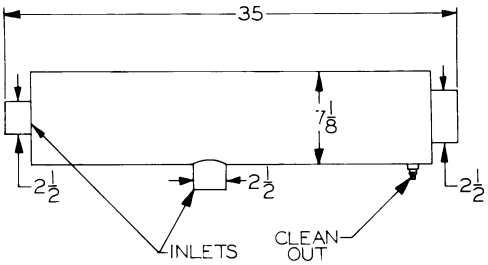

T-13502

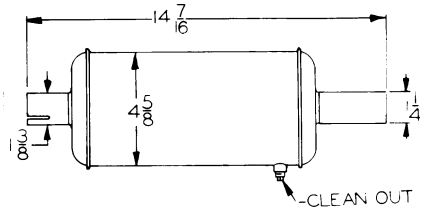

T-13529

NELSON *(continued)*

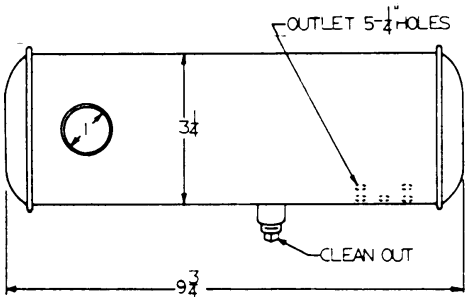

T-13559

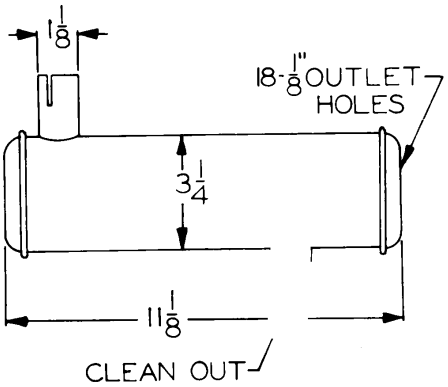

T-13572

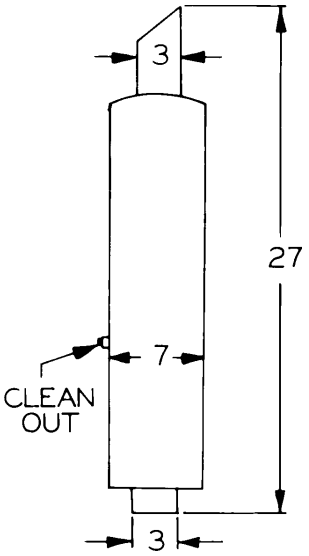

T-13651

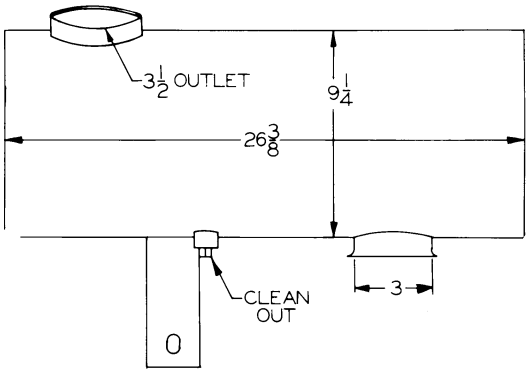

T-13716

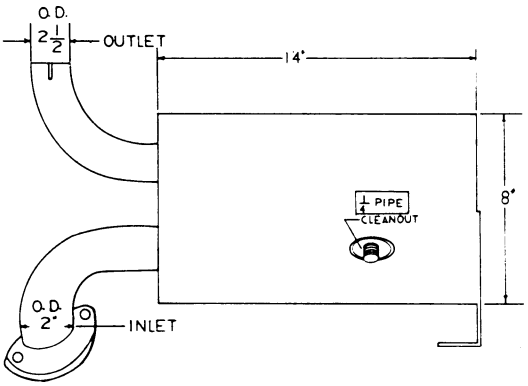

T-13846

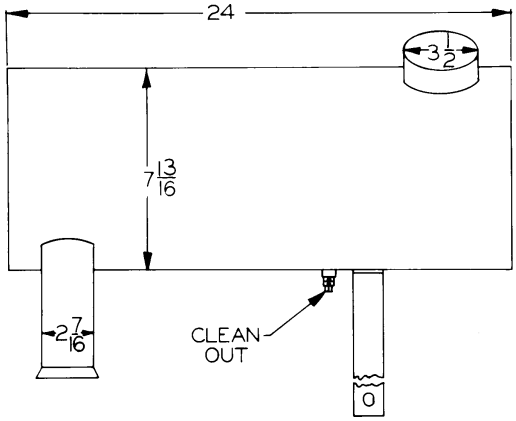

T-13919

NELSON *(continued)*

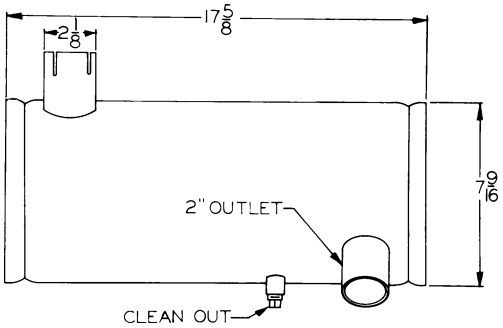

T-13933

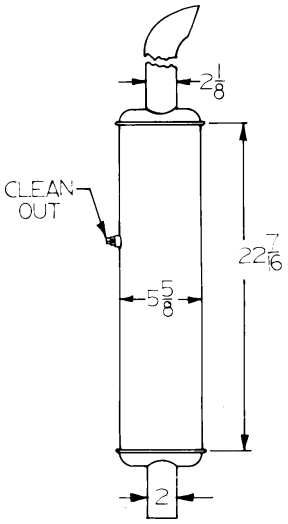

T-13934

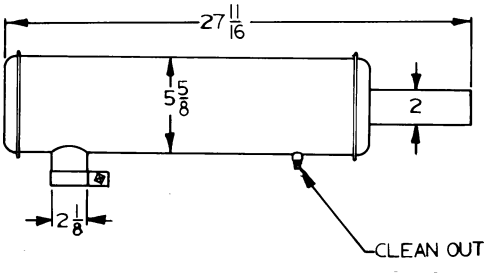

T-13935

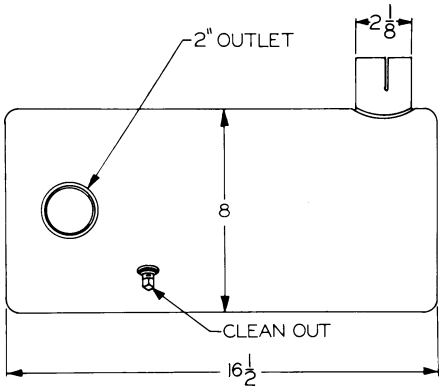

T-13940

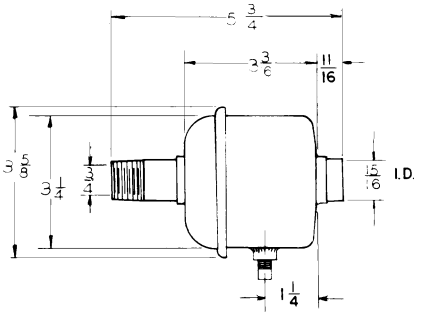

T-13944
T-10291

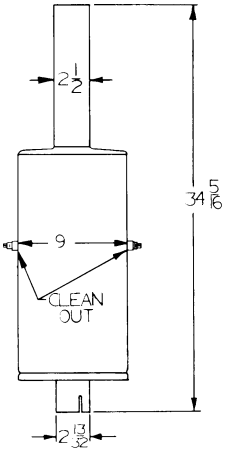

T-13977

NELSON *(continued)*

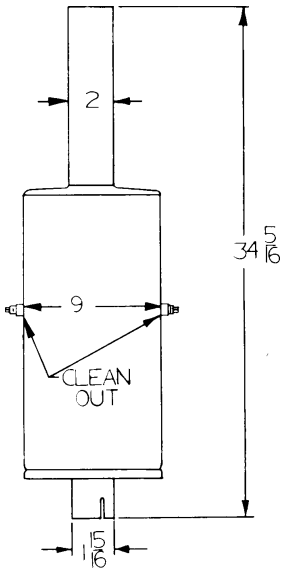

T-13978

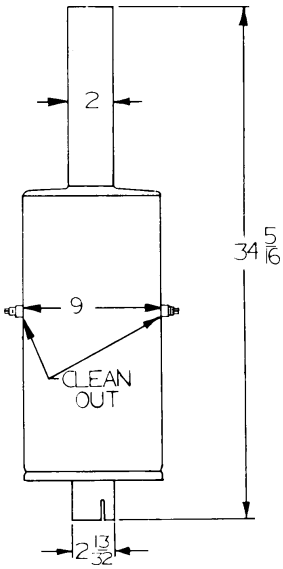

T-13979

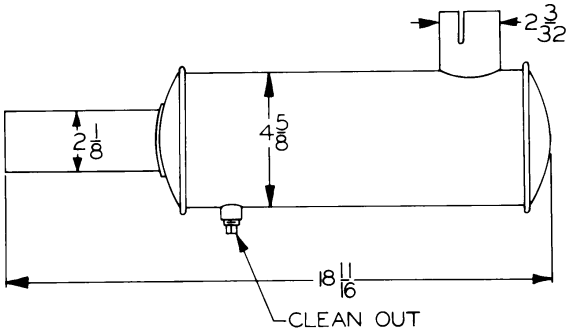

T-13994

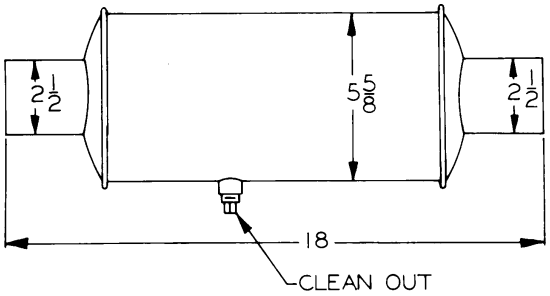

T-13995

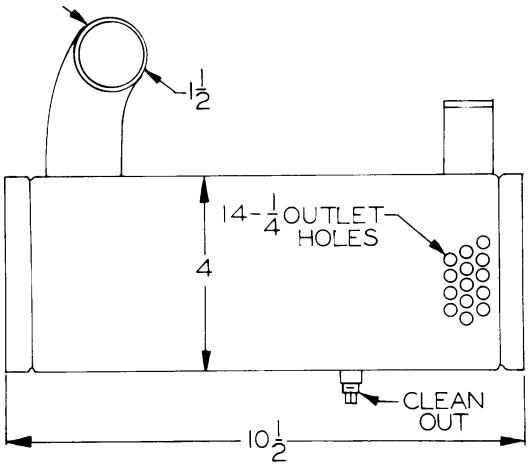

T-13999

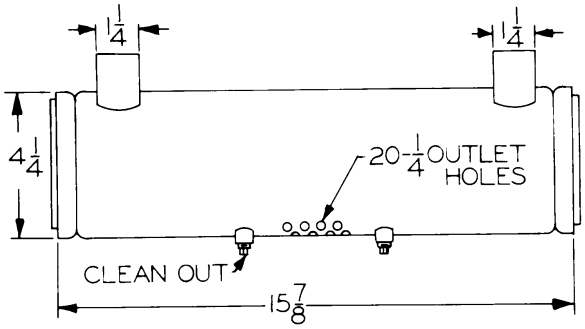

T-14000

NELSON *(continued)*

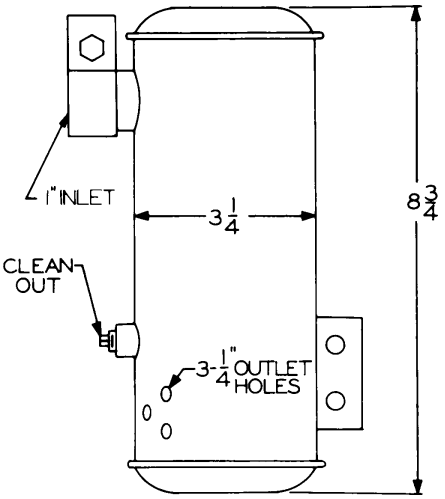

T-14002

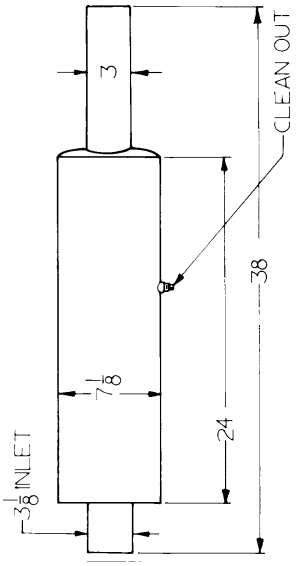

T-14005

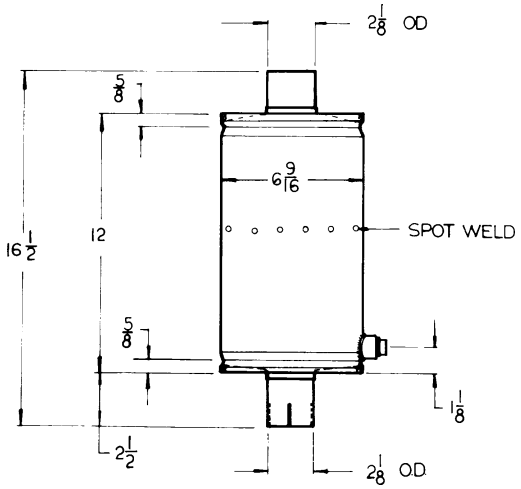

T-14066
T-9213

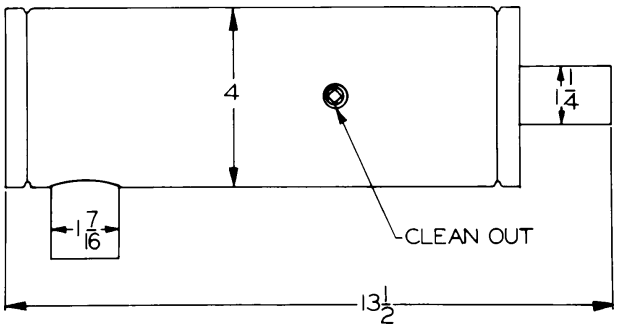

T-14090

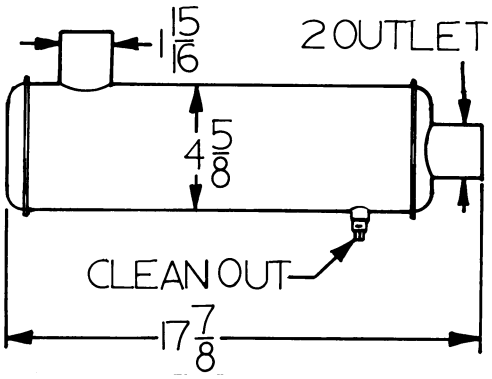

T-14099

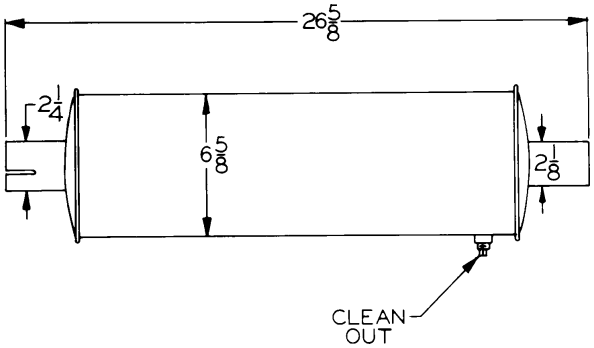

T-14105

NELSON *(continued)*

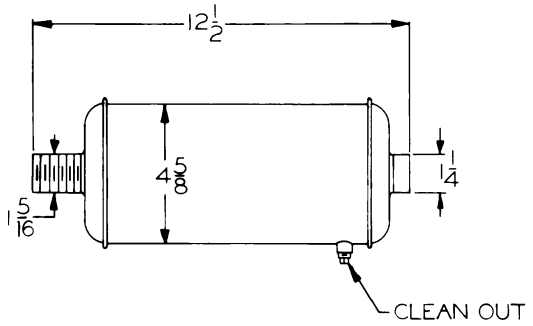

T-14106

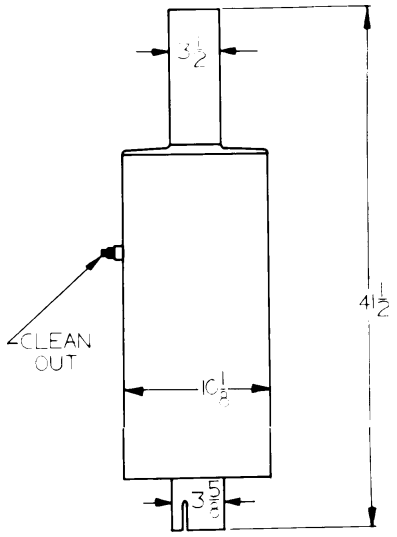

T-14110B

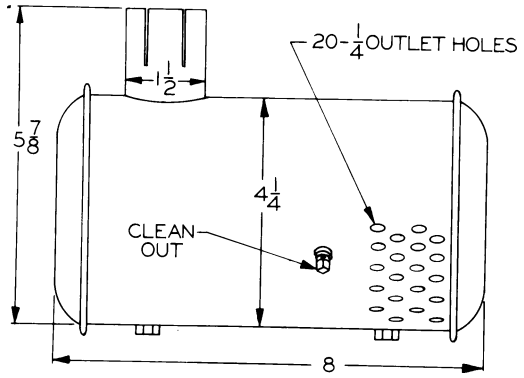

T-14116

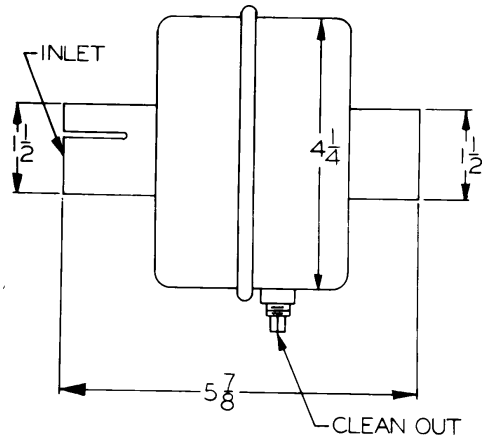

T-14123

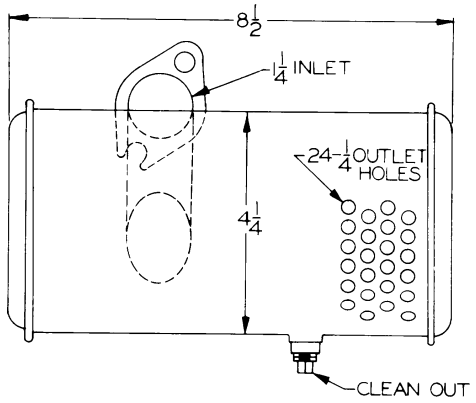

T-14125

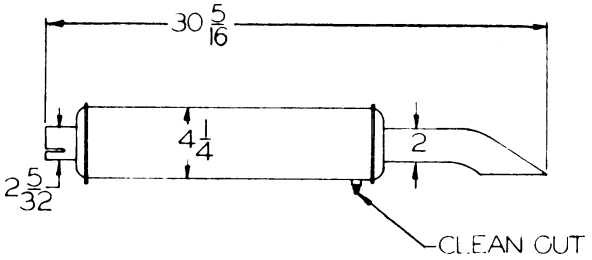

T-14217

NELSON *(continued)*

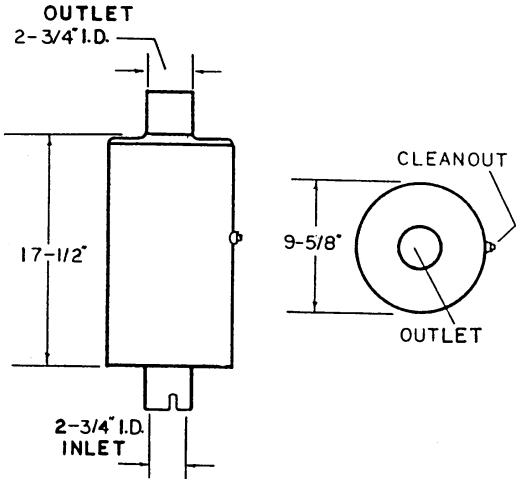

T-14219
19273

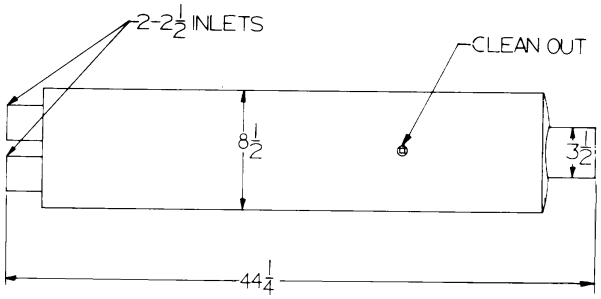

T-14220

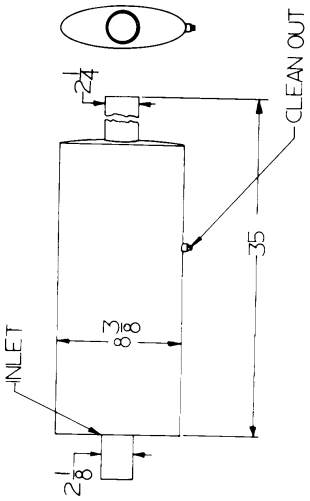

T-14222
19269
19383

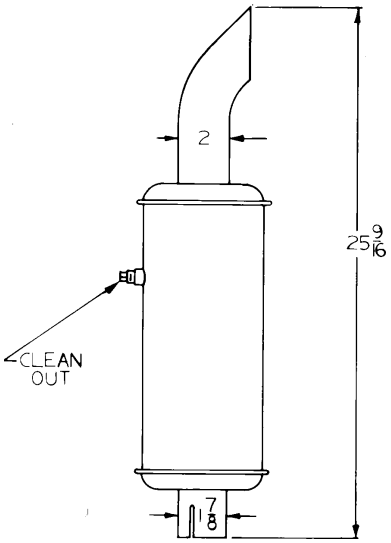

T-14223

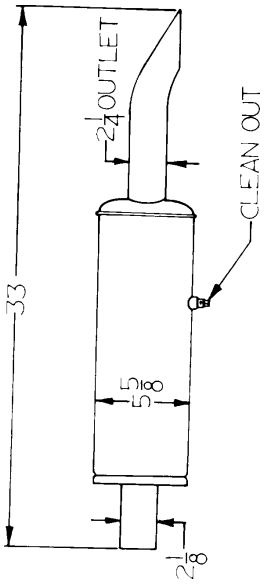

T-14224

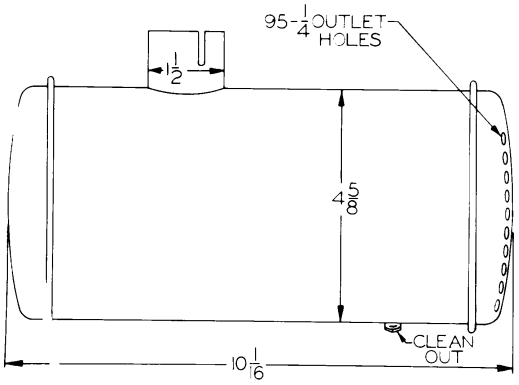

T-14315

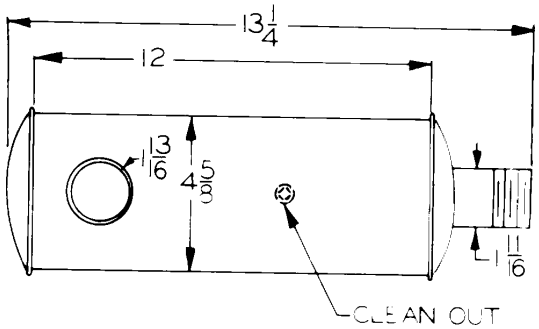

T-14316

NELSON *(continued)*

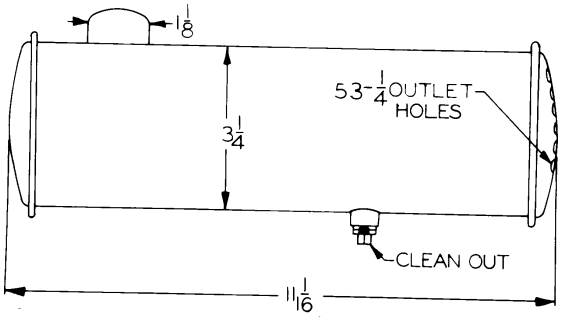

T-14321

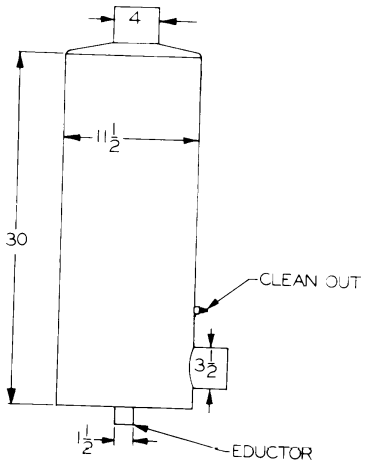

T-14334

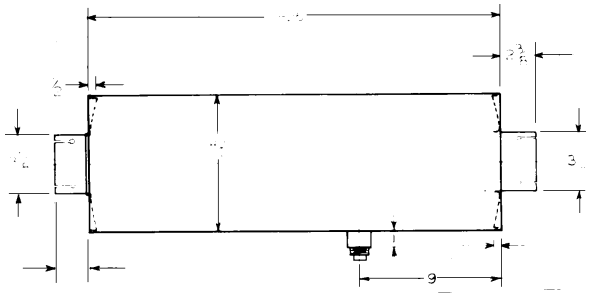

T-14382
T-10244

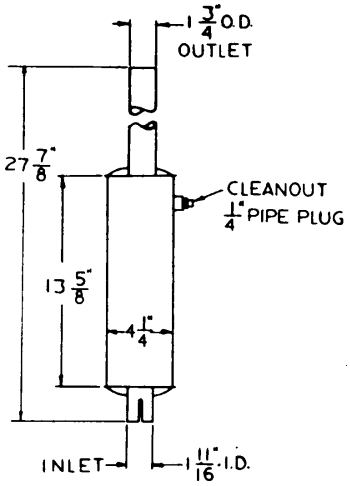

T-14390
14390

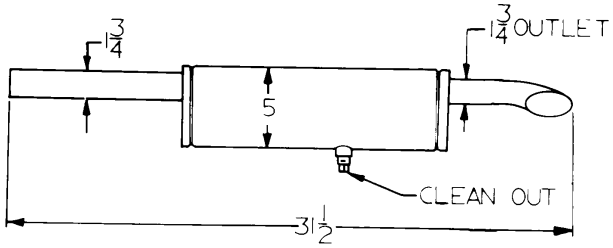

T-14403

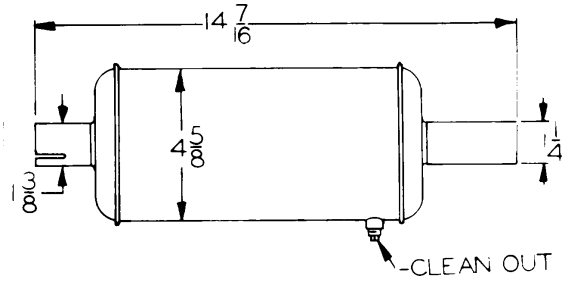

T-14406
T-13529

NELSON *(continued)*

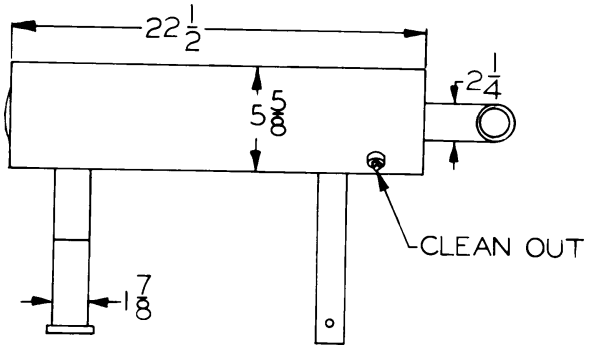

T-14415

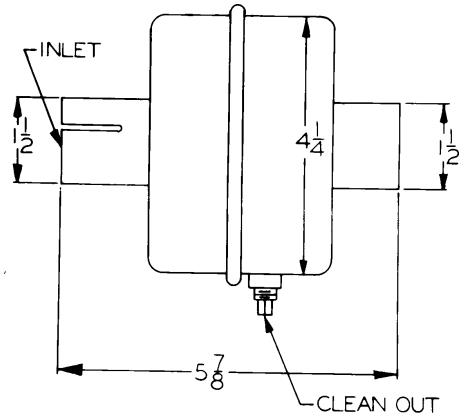

T-14425
T-14123

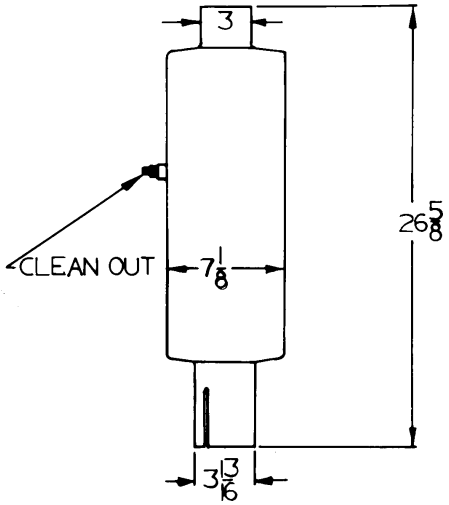

T-14529

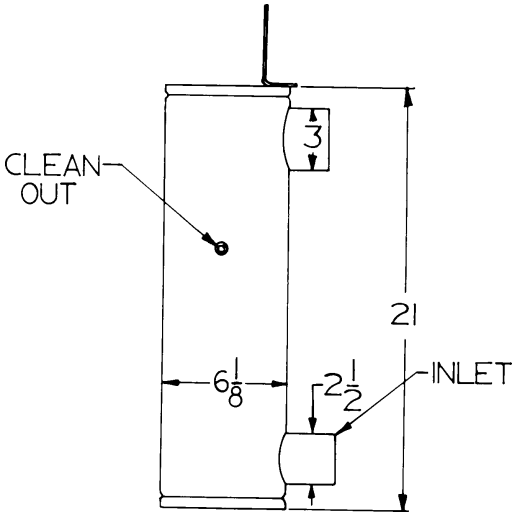

T-14630

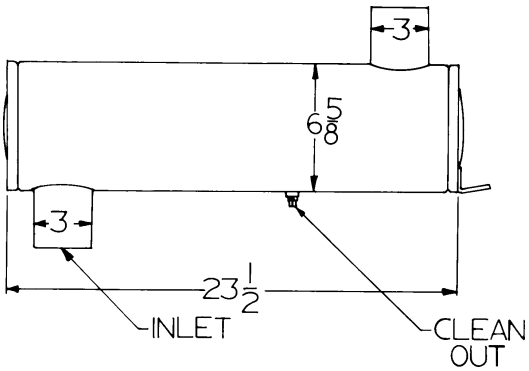

T-14631

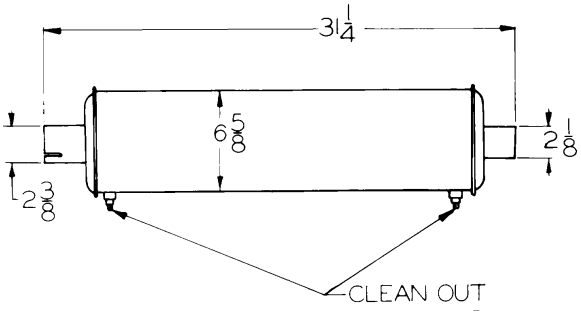

T-14671

NELSON *(continued)*

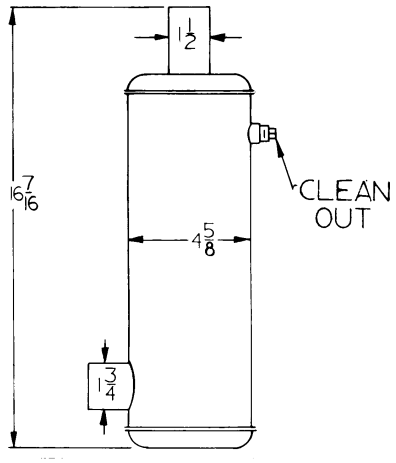

T-14688

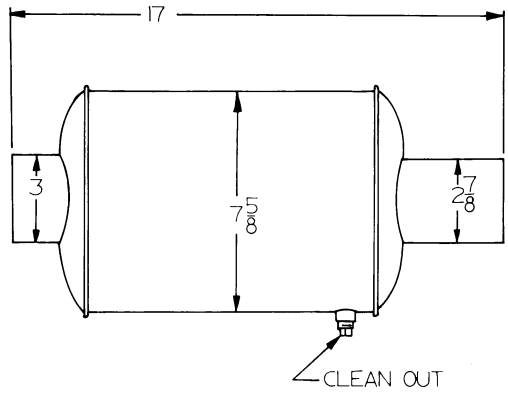

T-14754

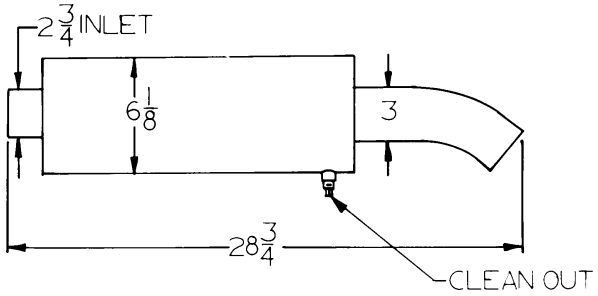

T-14816

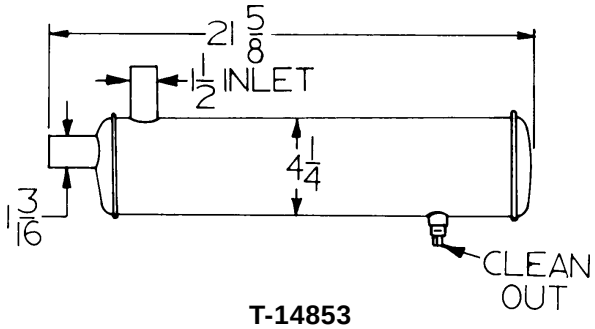

T-14853
ONAN 155-1485

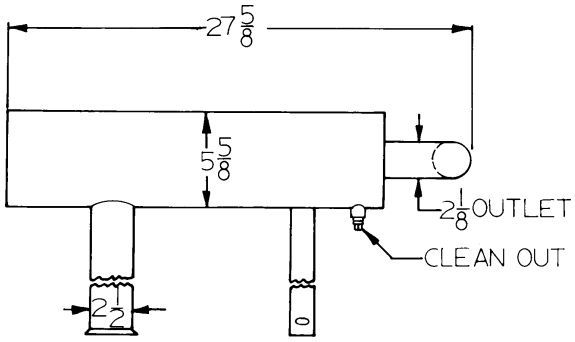

T-14907

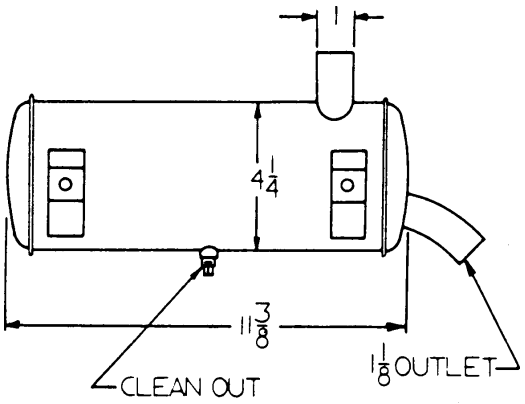

T-15077

NELSON *(continued)*

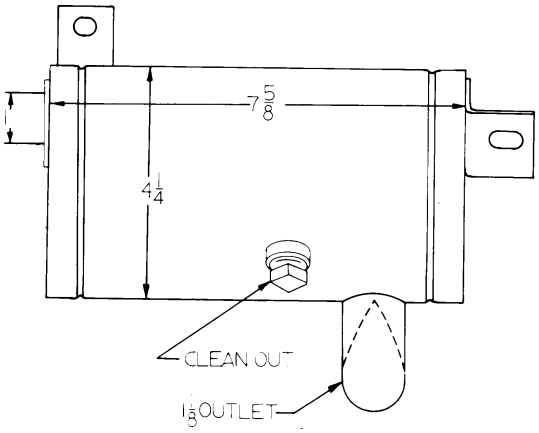

T-15078

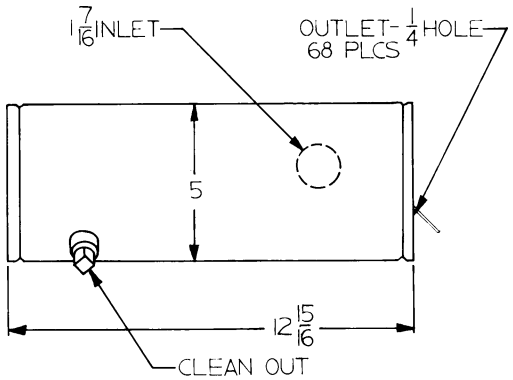

T-15079

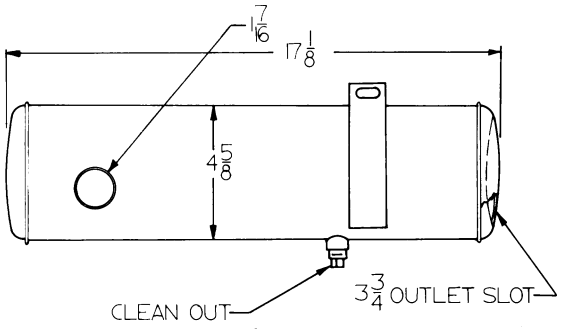

T-15080

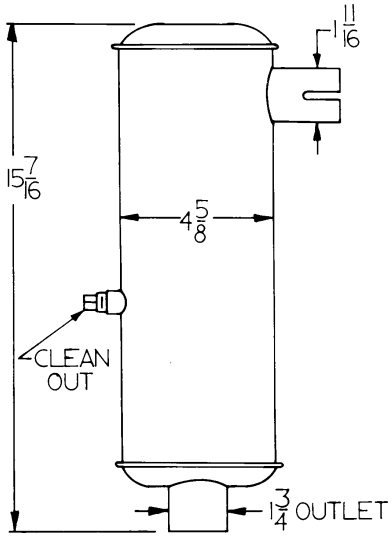

T-15215

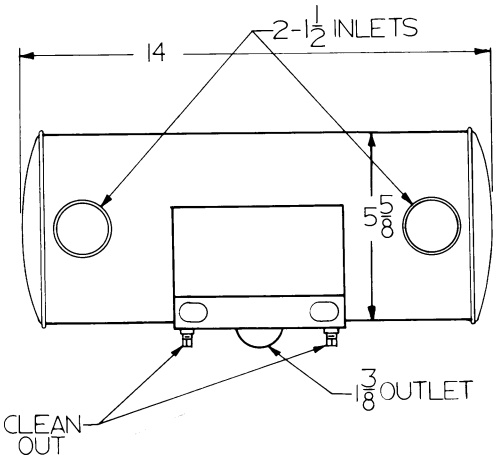

T-15341

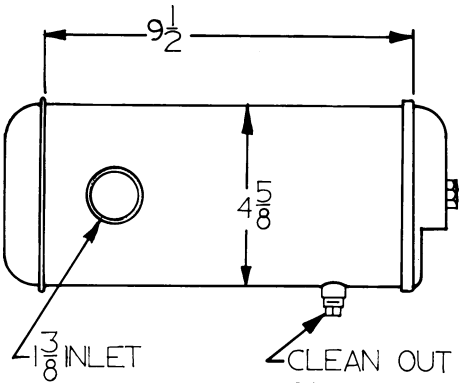

T-15611

NELSON *(continued)*

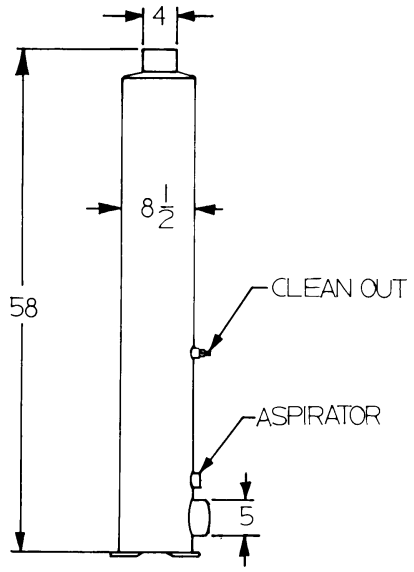

T-15688

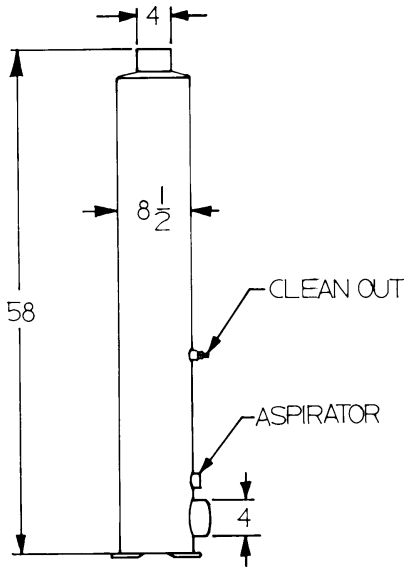

T-15689

NELSON-BURGESS

NELSON-BURGESS

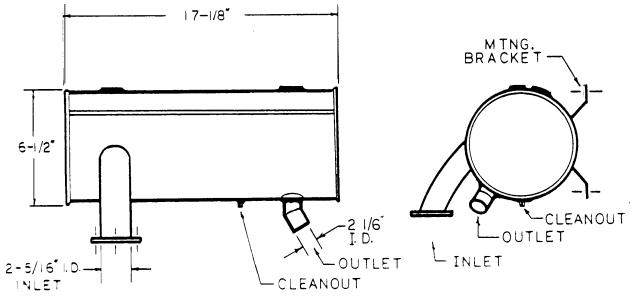

17AE07

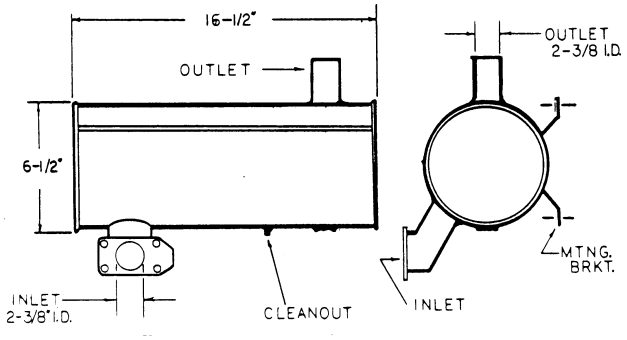

17AE08

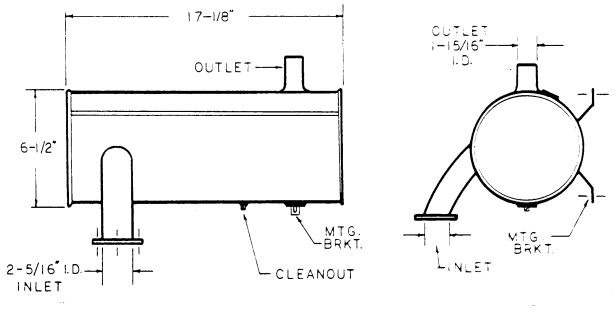

17AE10

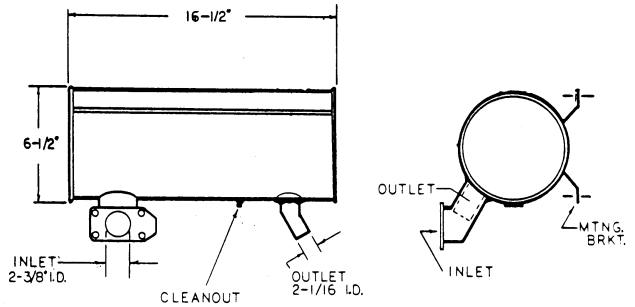

17AE12

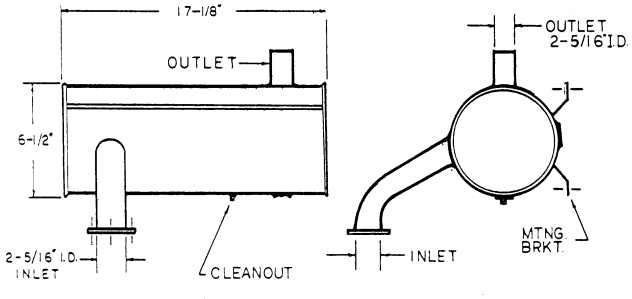

17AE14

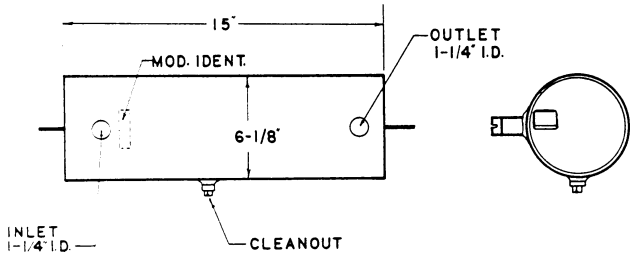

20965

NELSON-BURGESS/O & R/ONAN

NELSON-BURGESS *(continued)*

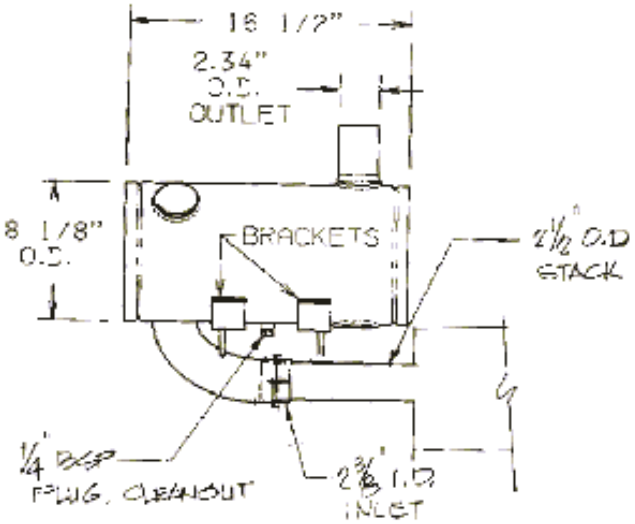

39616

O & R

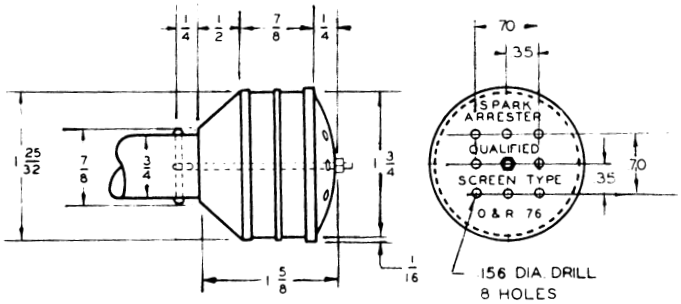

O&R 76

ONAN

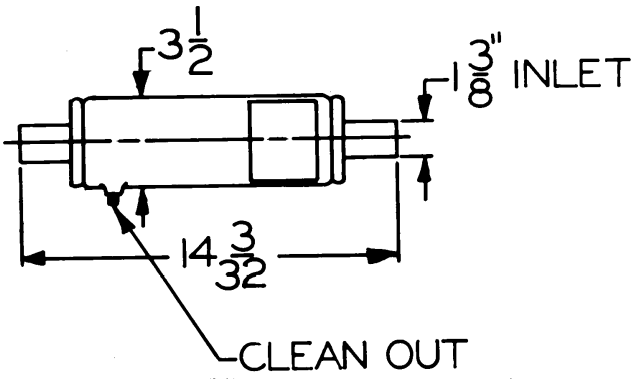

155-1254
NELSON T-12863

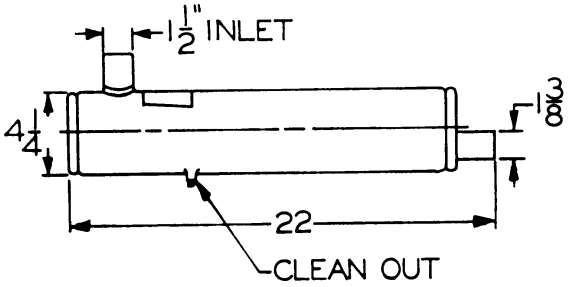

155-1258
NELSON T-12825F

ONAN *(continued)*

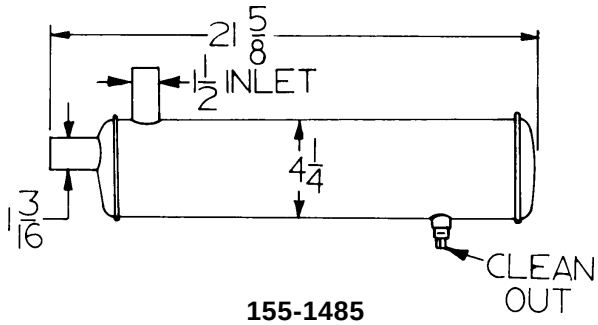

155-1485
NELSON T-14853

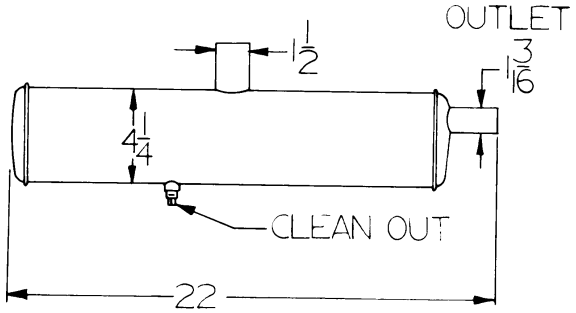

155-1520
NELSON 15893

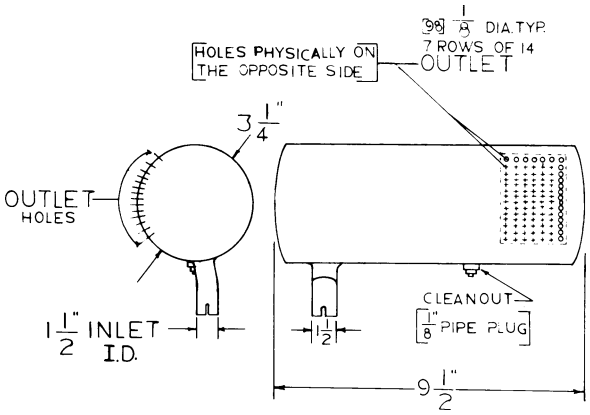

155-1698
NELSON 16752

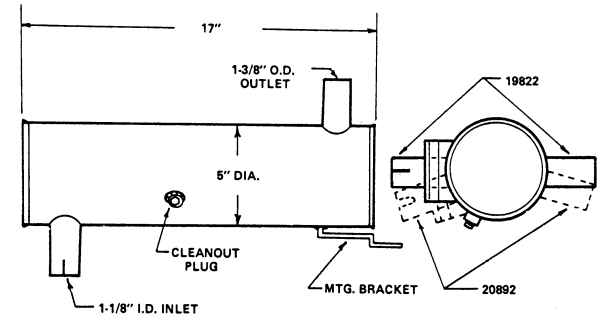

155-2047
NELSON 19822

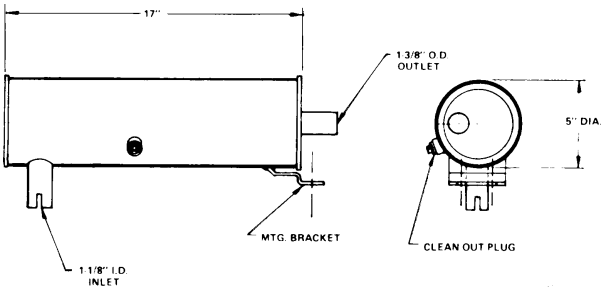

155-2048
NELSON 19820

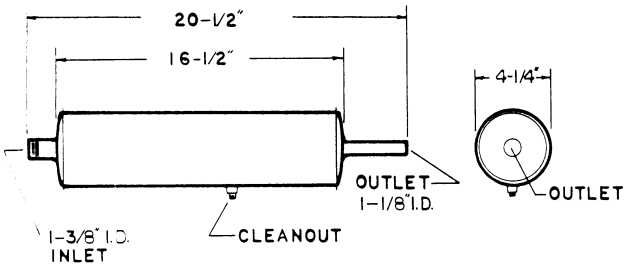

155-2065
NELSON 21279

ONAN *(continued)*

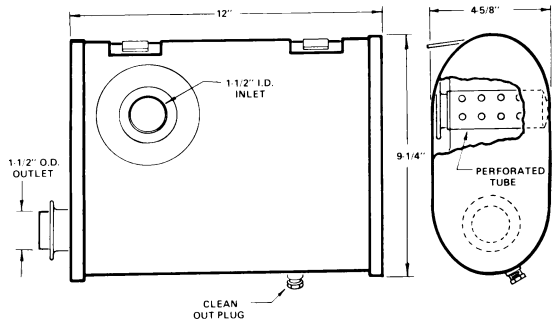

155-2098
NELSON 20513

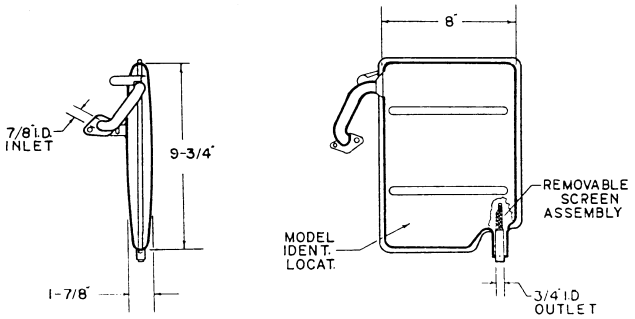

155-2186
NELSON 20578

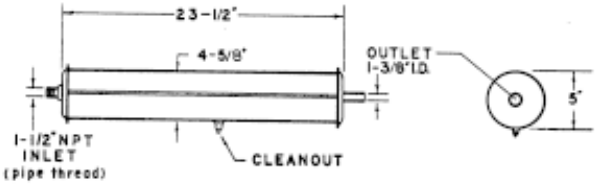

155-2262
NELSON 21709

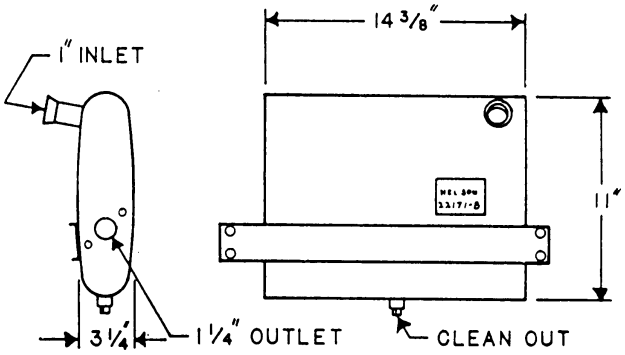

155-2416
NELSON 22171B

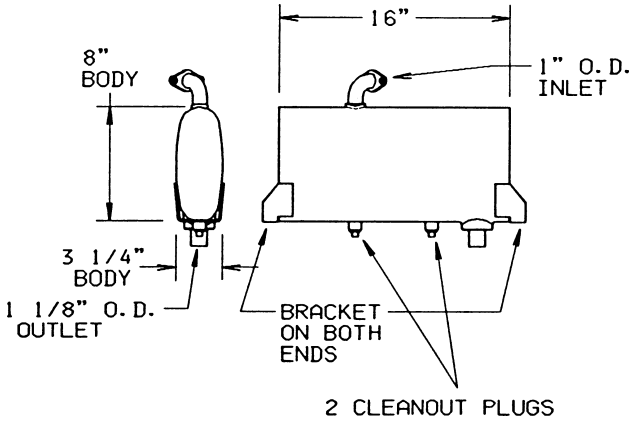

155-2783
NELSON 24866B

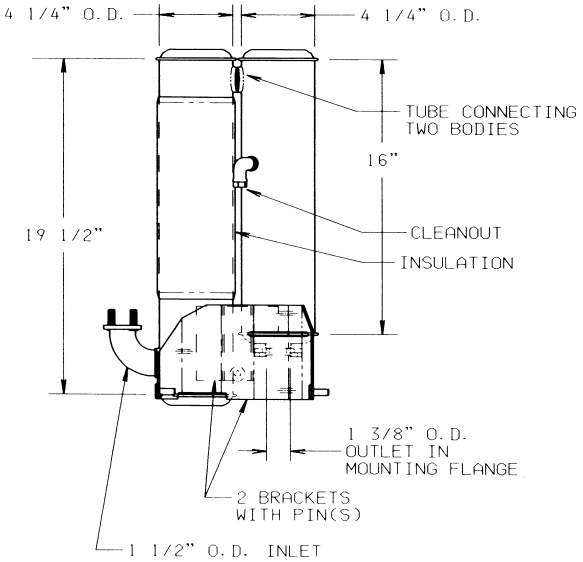

155-2885
NELSON 25640

ONAN/PERFORMANCE SPECIALTIES/PKM

ONAN *(continued)*

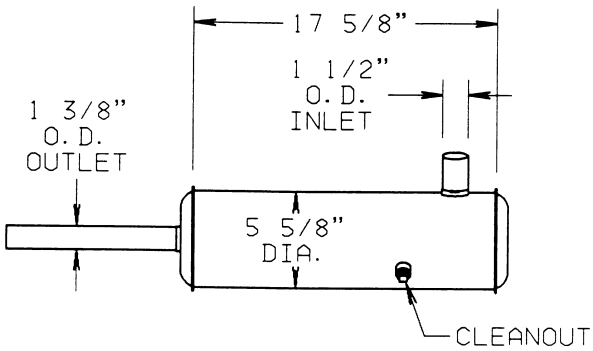

155-2951
NELSON 25191

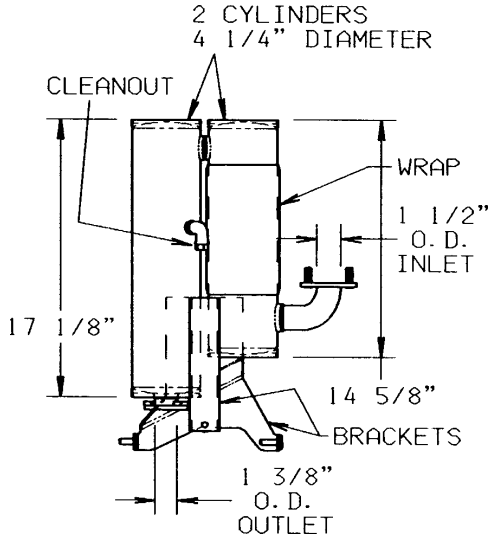

155-3110
NELSON 26503

PERFORMANCE SPECIALTIES

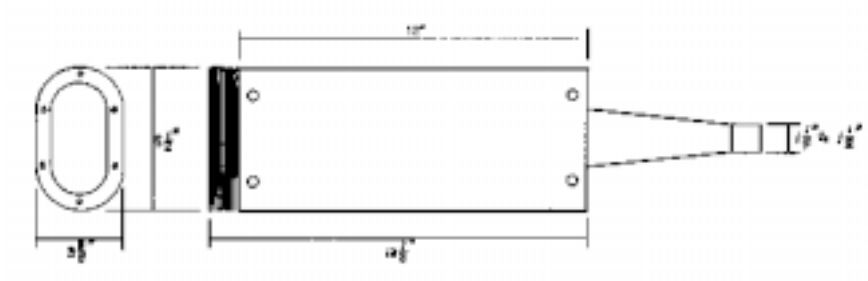

DG 01

PKM

No diagrams available:

Refer to General Purpose Qualification Table at end of section for rating.

POLARIS

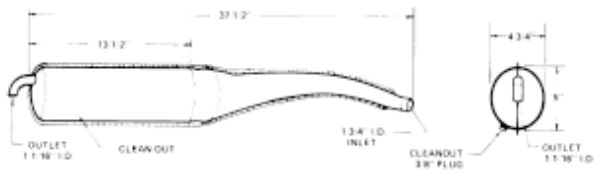

1260510

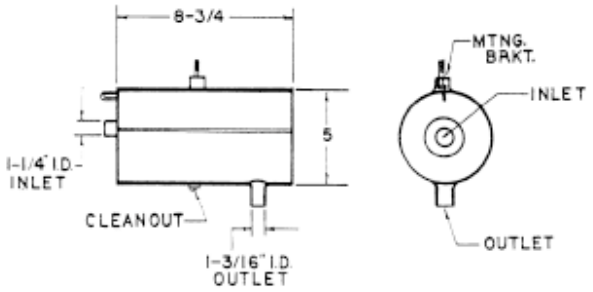

1260520

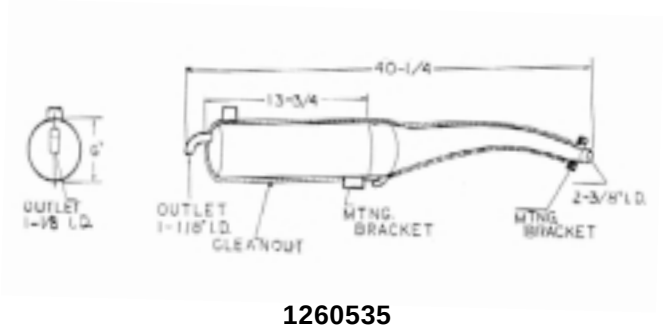

1260535
126535-5
1260544
1260576

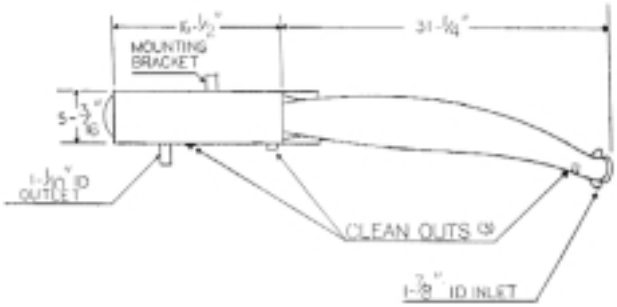

1260588

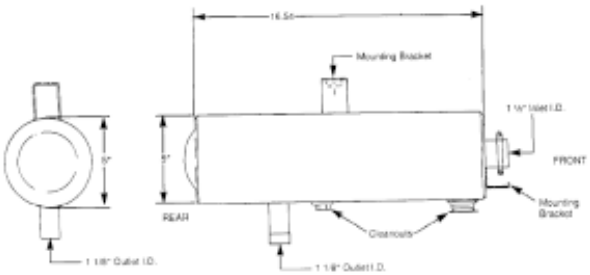

1260629

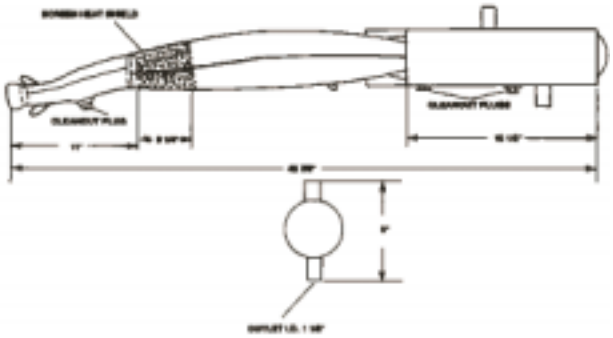

1260702

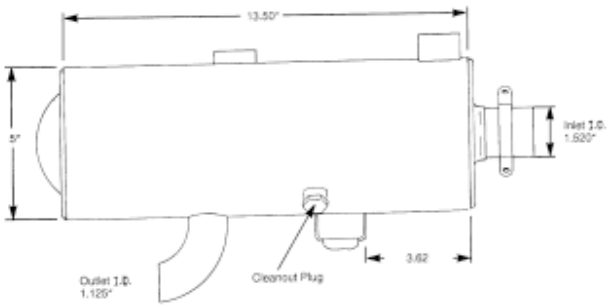

1260715

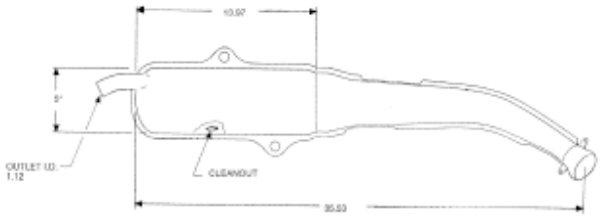

1260741

POLARIS *(continued)*

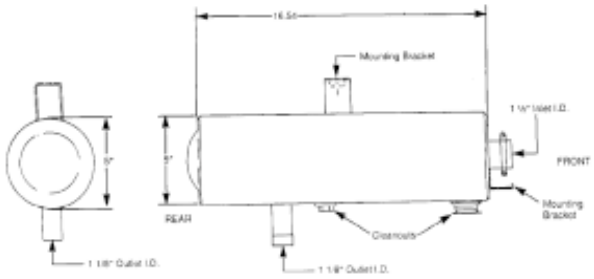

1260742
1260629

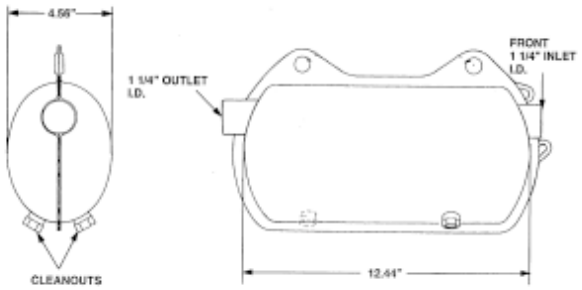

1260745

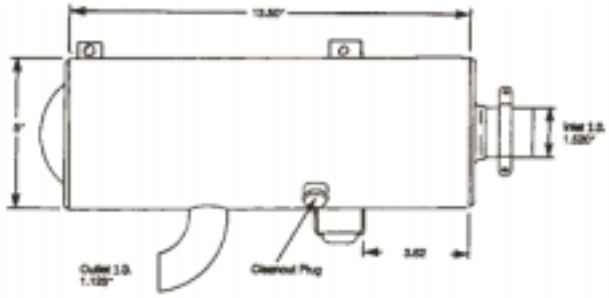

1260807

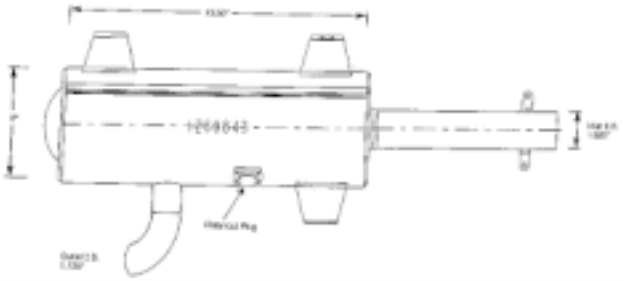

1260843

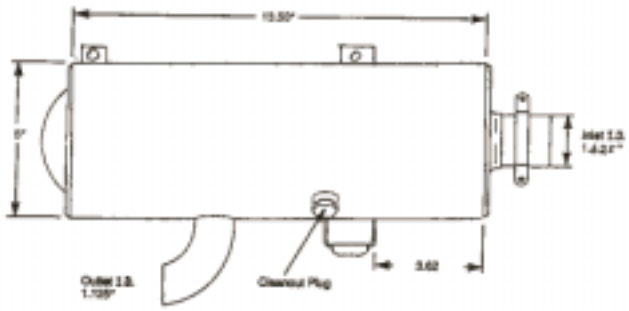

1260869

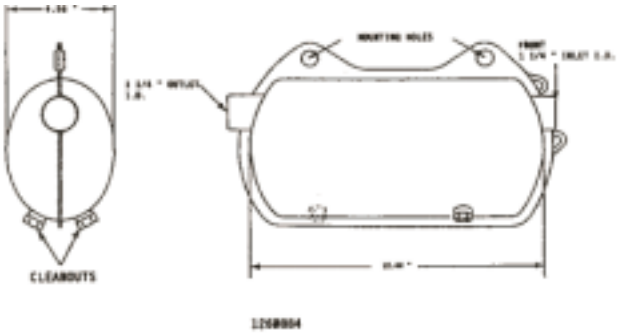

1260884

POLARIS *(continued)*

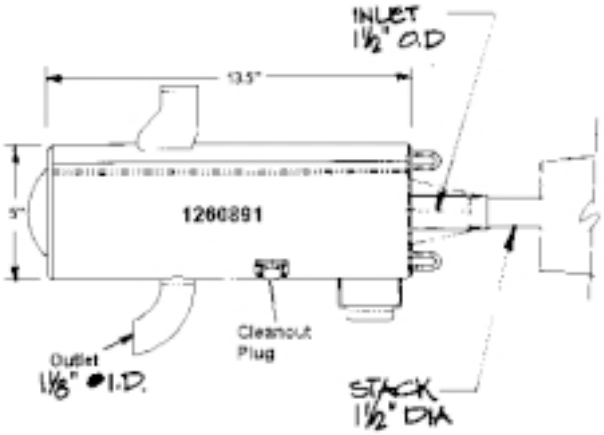

1260891

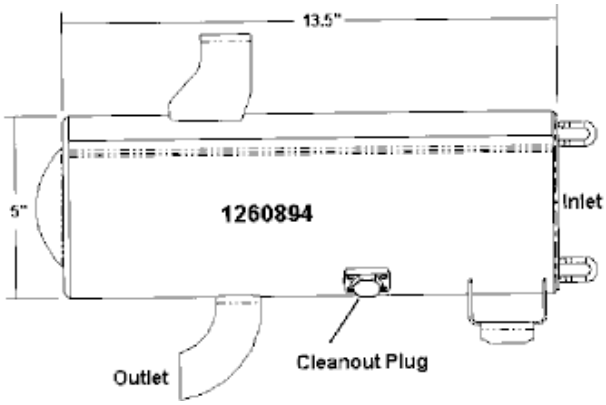

1260894

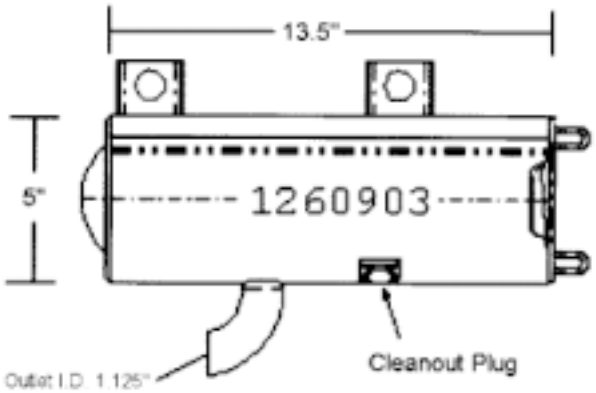

1260903

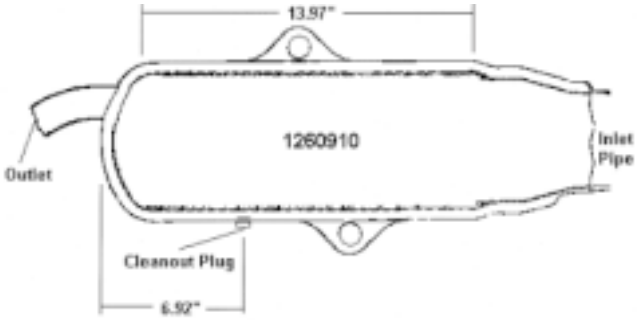

1260910

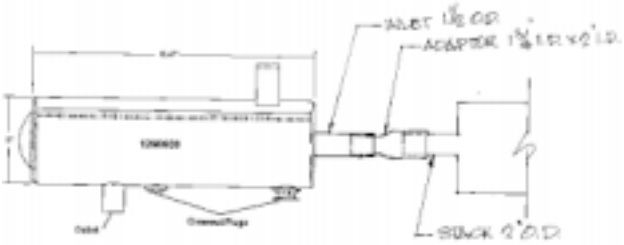

1260930

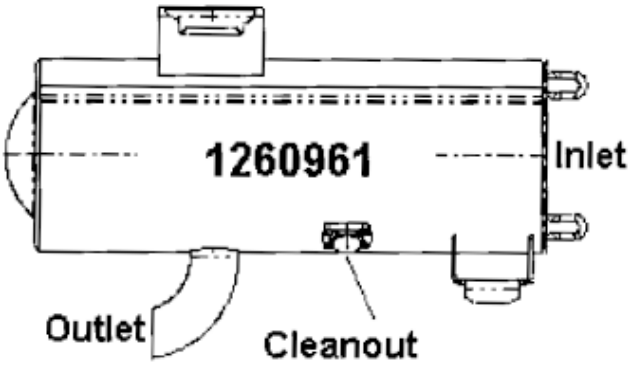

1260961

POLARIS *(continued)*

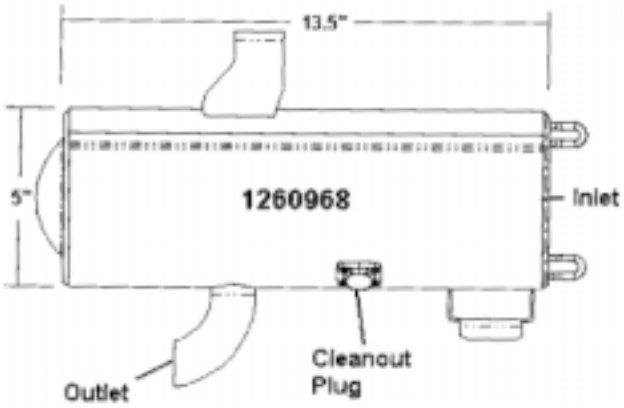

1260968

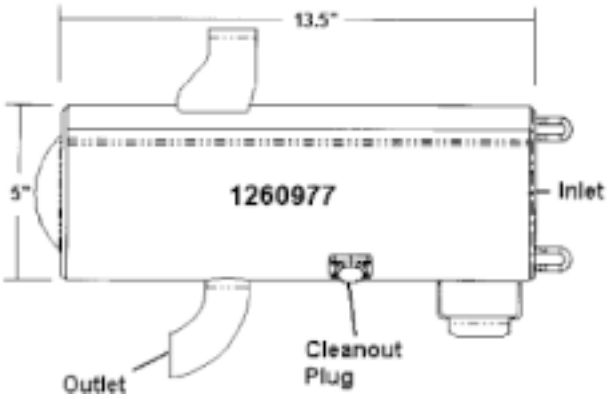

1260977

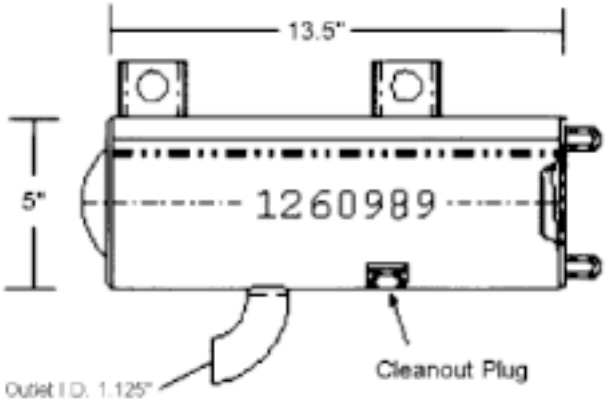

1260989

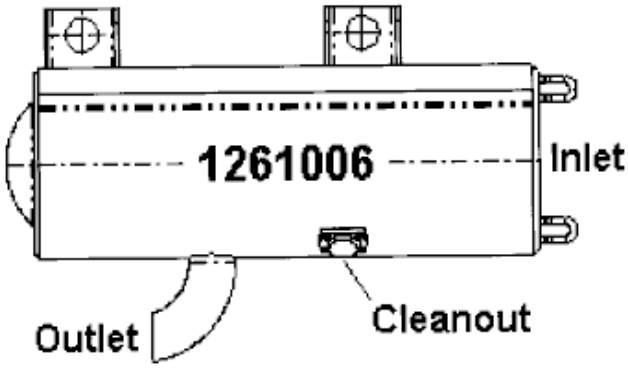

1261006

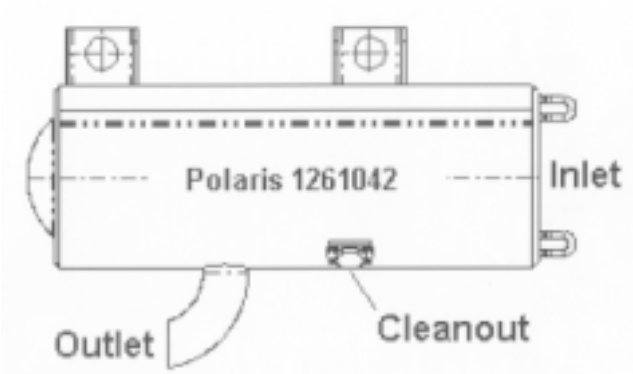

1261042

POWELL/PRO-CIRCUIT

POWELL

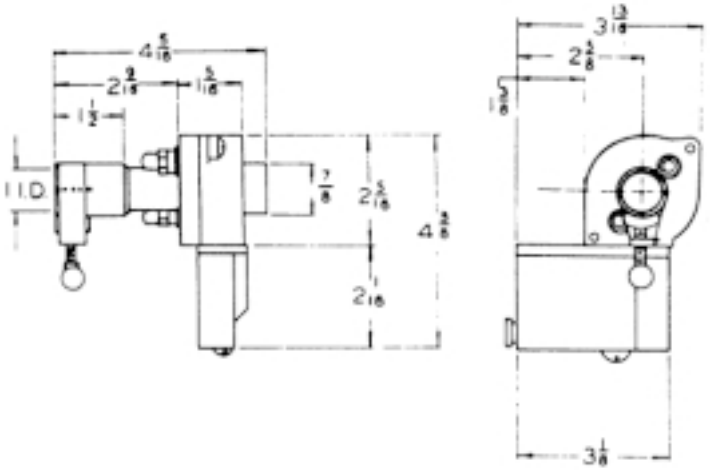

No. "F"

PRO-CIRCUIT

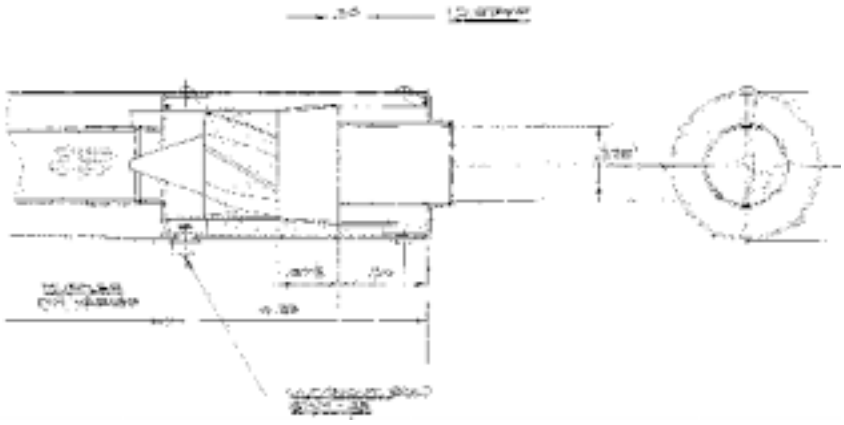

PC007OS

PRO-CIRCUIT/RELIABLE

PRO-CIRCUIT *(continued)*

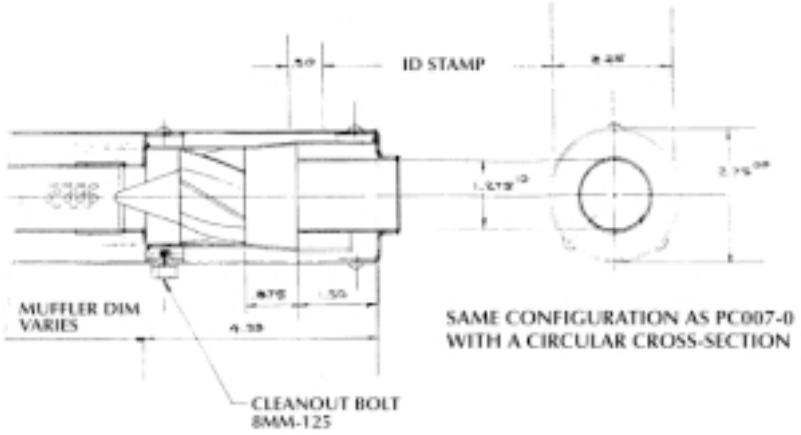

PC007-R

RELIABLE

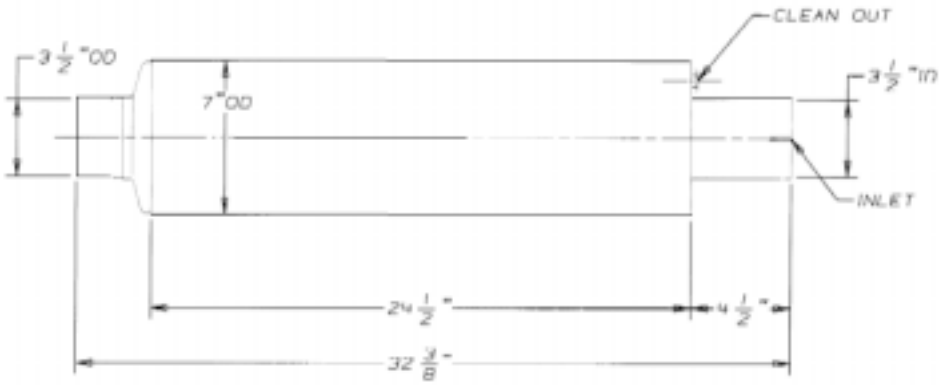

M-07-0285

RIKER

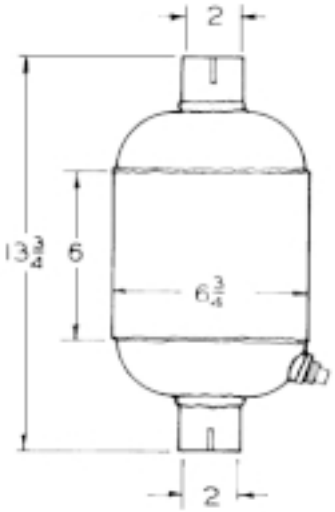

SA-200

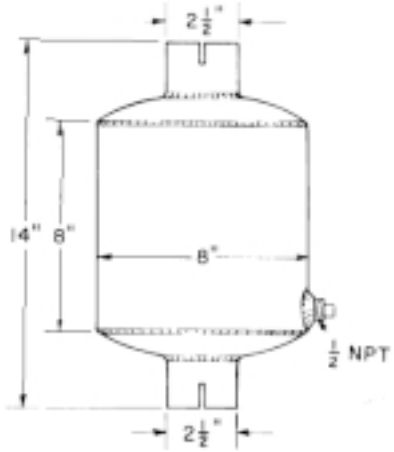

SA-250

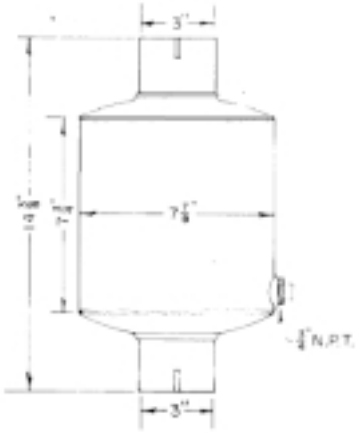

SA-300

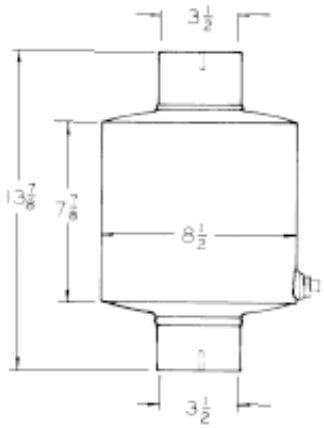

SA-350

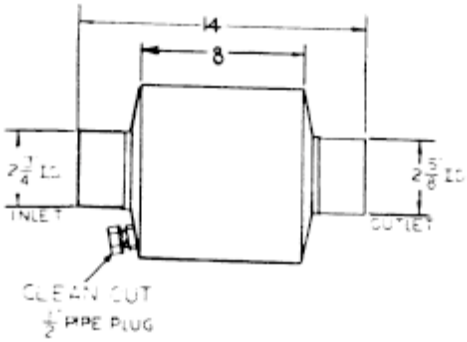

SA-350-1
Mod SA-350

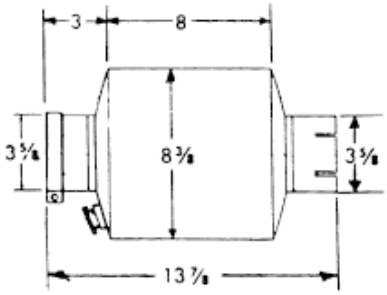

SA-353

SA-400

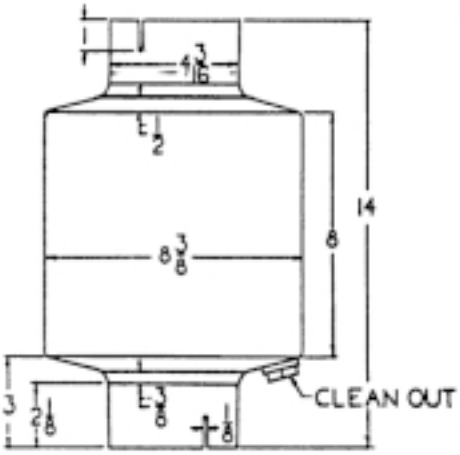

SA-400A

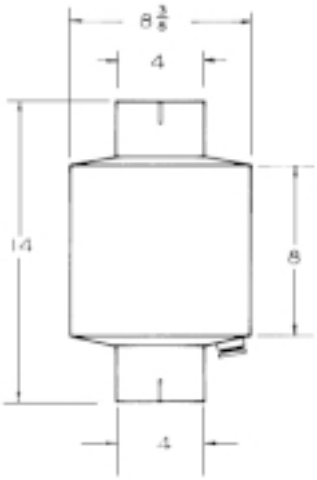

SA-401

RIKER/RUPP

RIKER *(continued)*

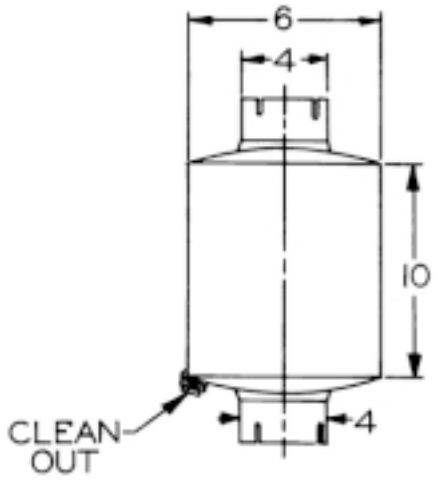

SA-408

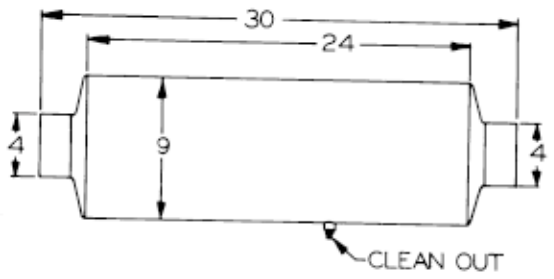

SA-409
Modified SA-408

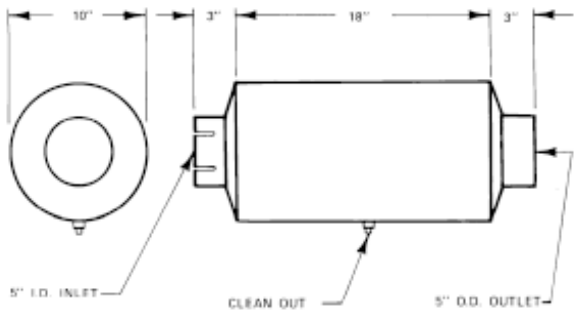

SA-500

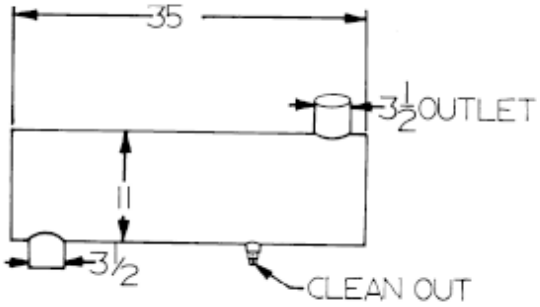

SA-6762
Modified SA-408

RUPP

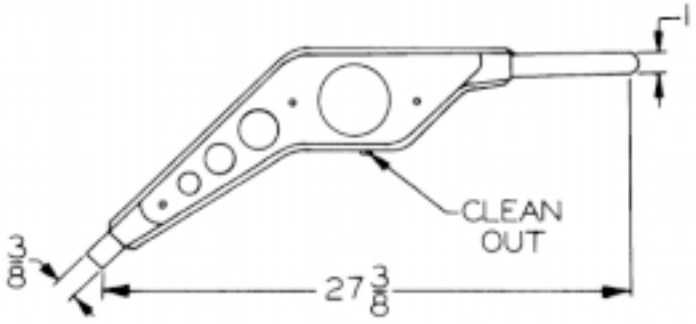

32004

SKYWAY/SKYWAY-COBRA

SKYWAY

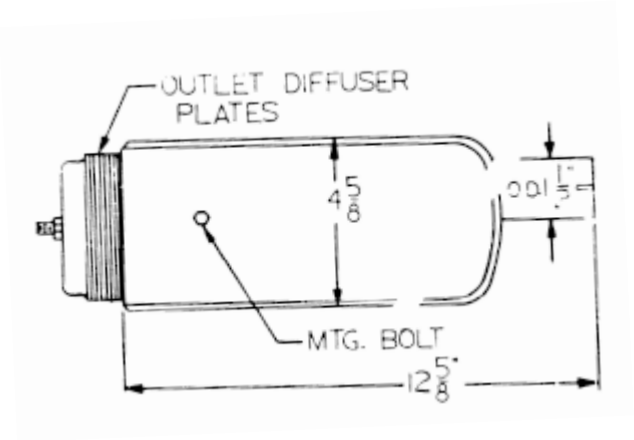

1000

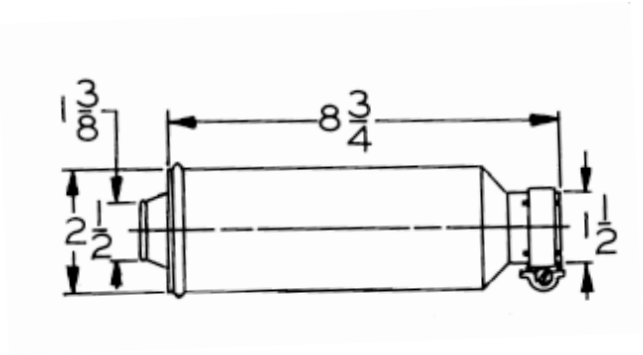

2500

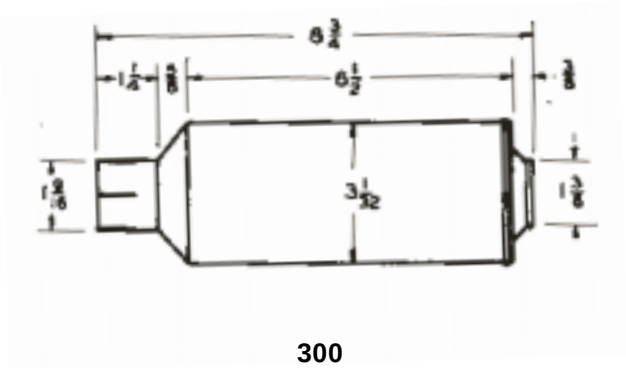

300

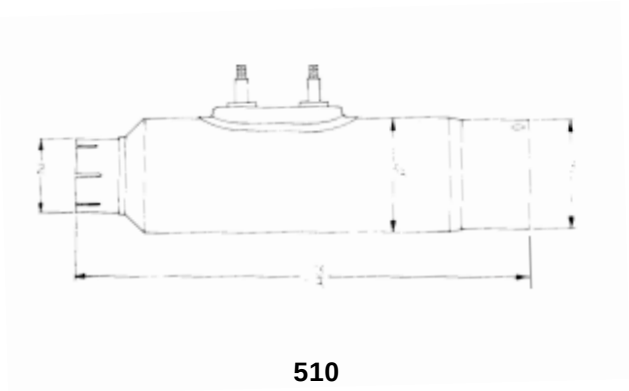

510

SKYWAY-COBRA

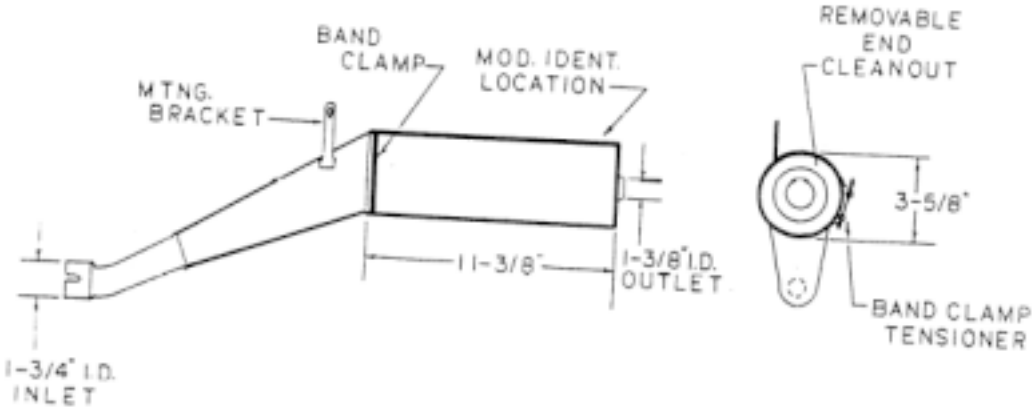

300-1

SOUNDMASTER/SPARESTER

SOUNDMASTER

No diagrams available:

Refer to General Purpose Qualification Table at end of section for rating.

SPARESTER

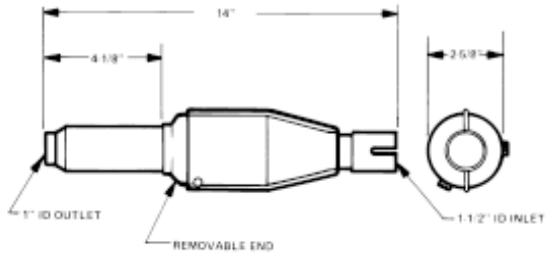

601

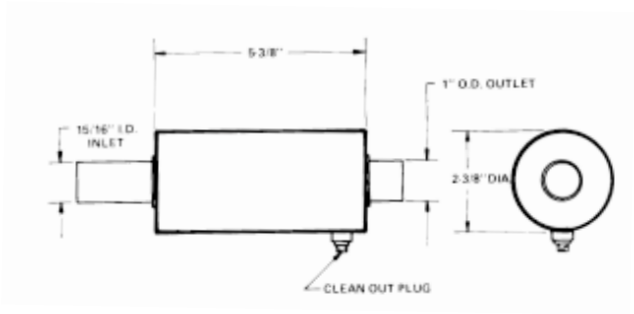

602

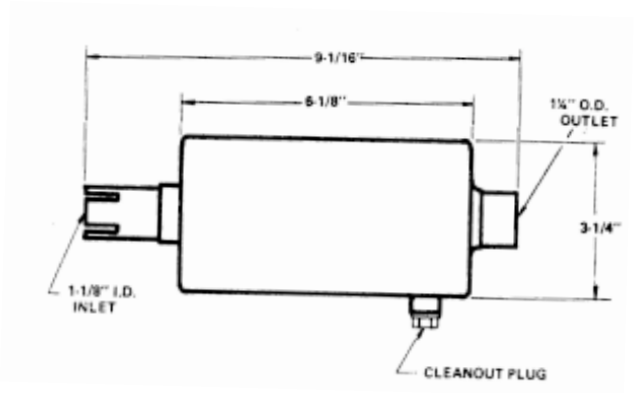

801

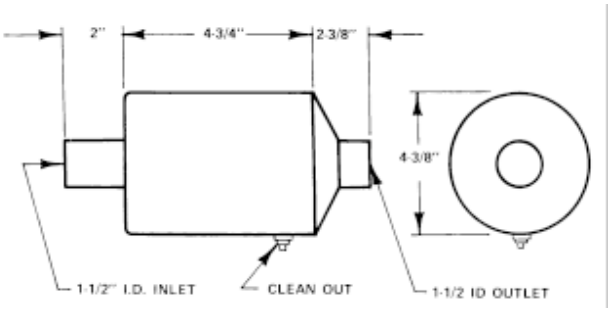

SA-100

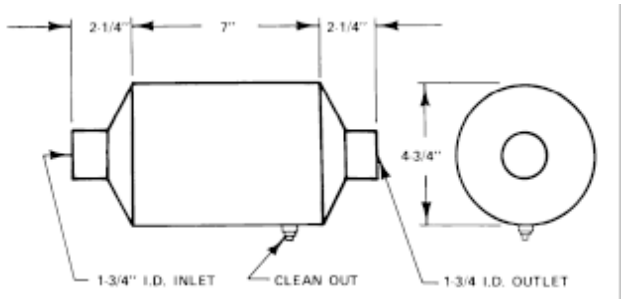

SA-120

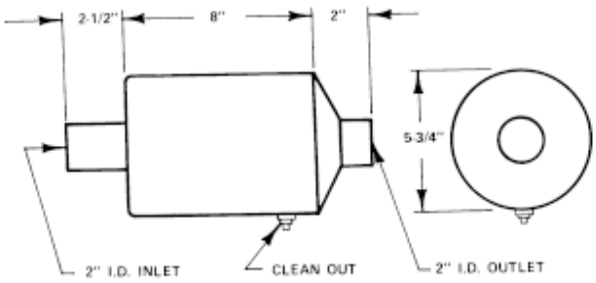

SA-140

SPARESTER/SPARKY

SPARESTER *(continued)*

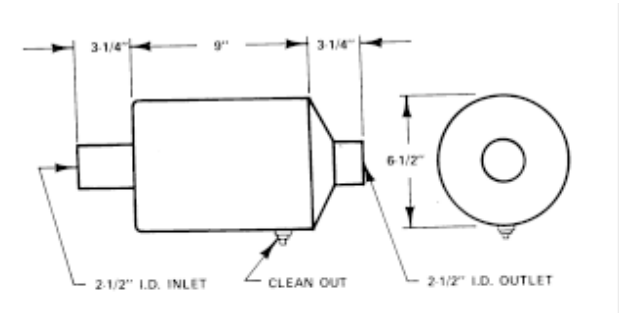

SA-160

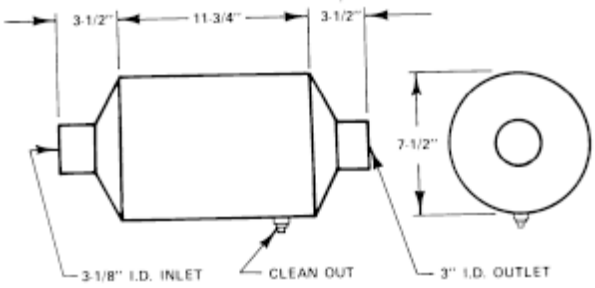

SA-190

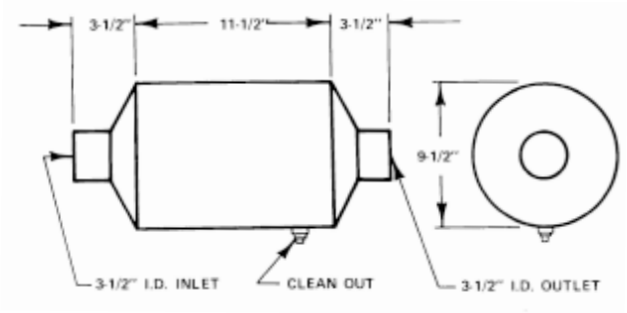

SA-240

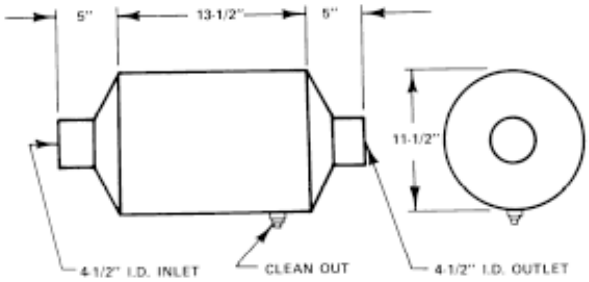

SA-280

SPARKY

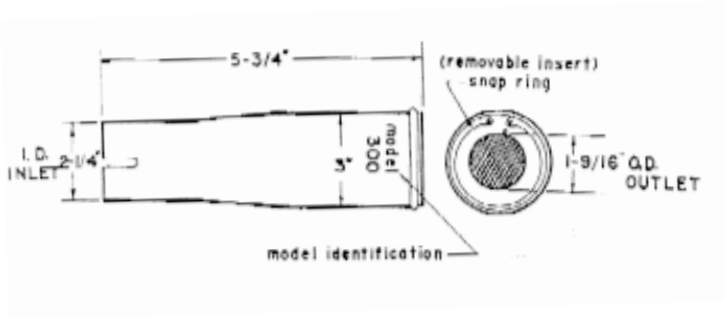

300 SPARKY

STEMCO/STRADER/SUMMIT INDUSTRIES

STEMCO

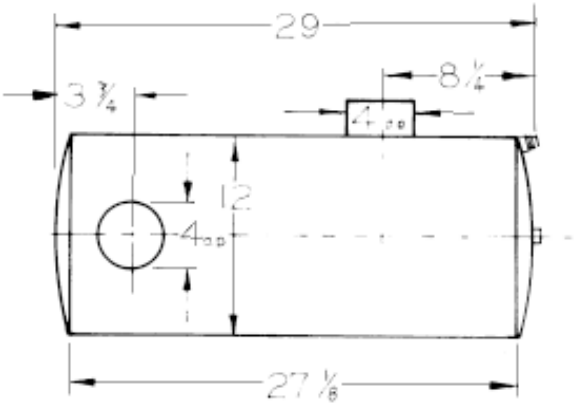

595M

STRADER

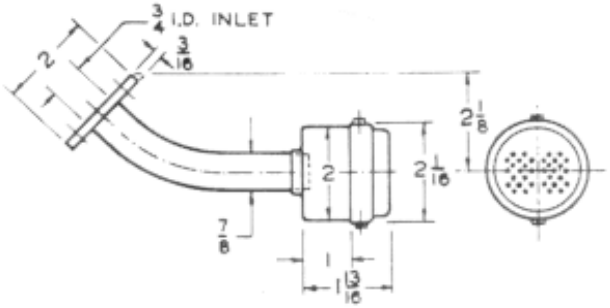

200

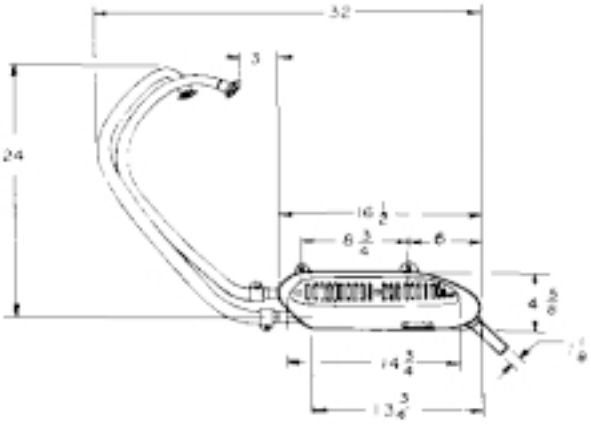

400

SUMMIT INDUSTRIES

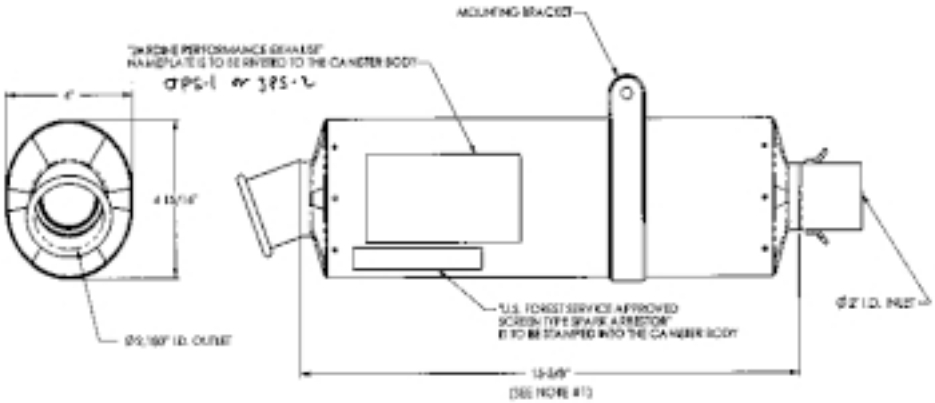

JPS-1
JPS-2

SUPERTRAPP

SUPERTRAPP

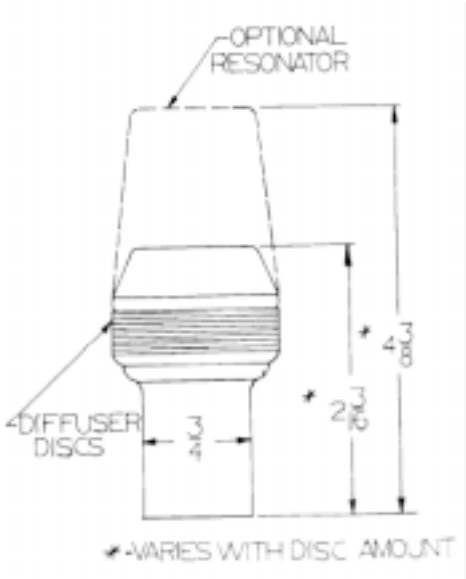

T-99

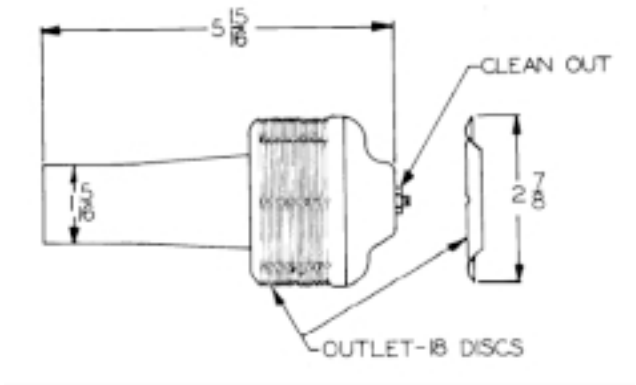

T-100

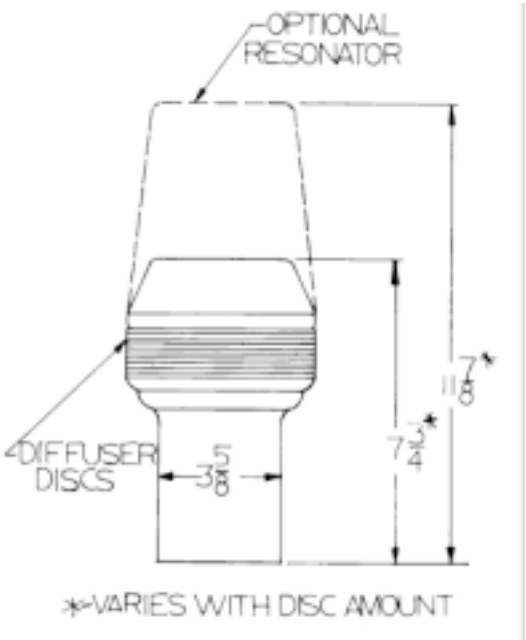

T-101

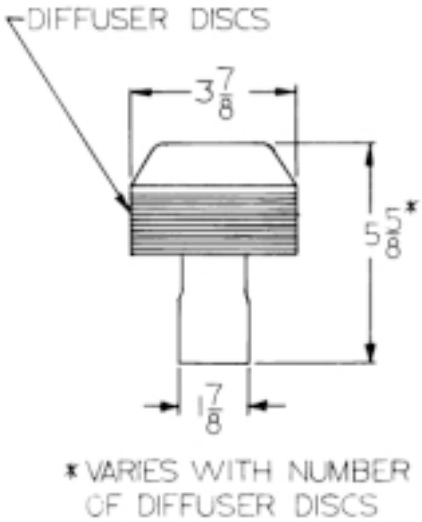

T-102

SUZUKI

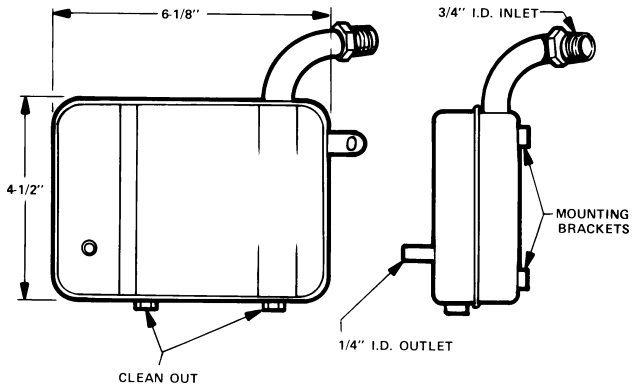

HS-1

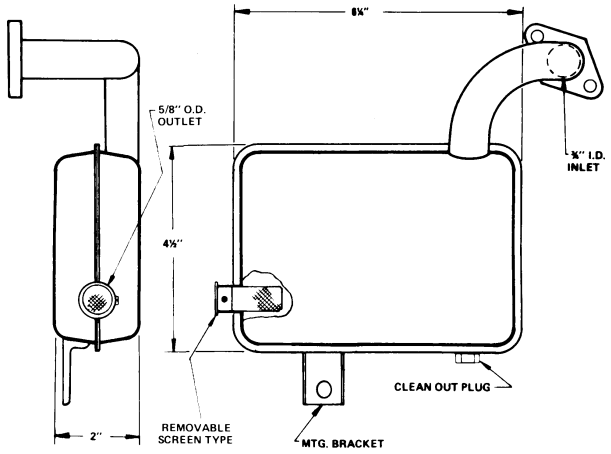

HS-2

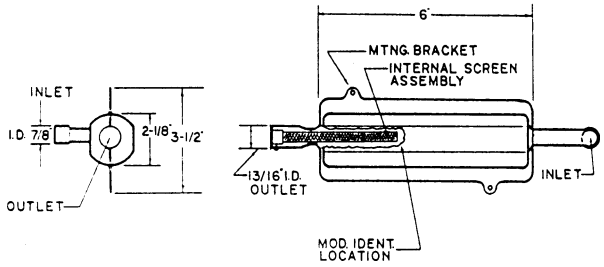

HS-3

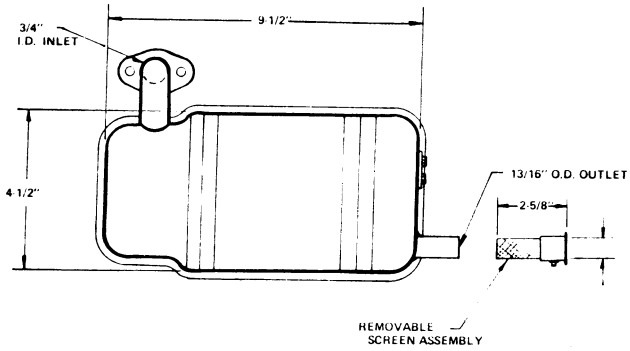

HS-4

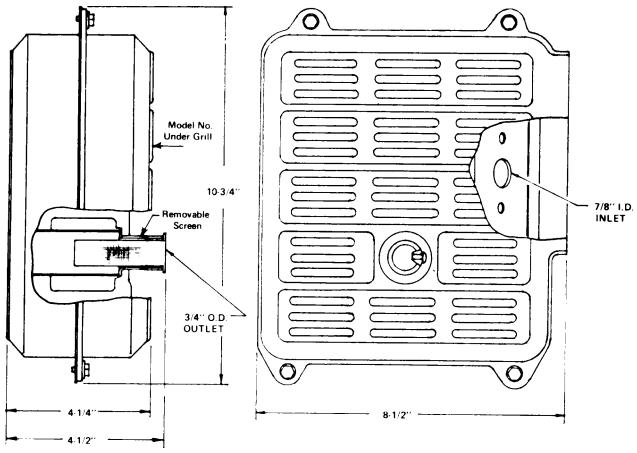

HS-5

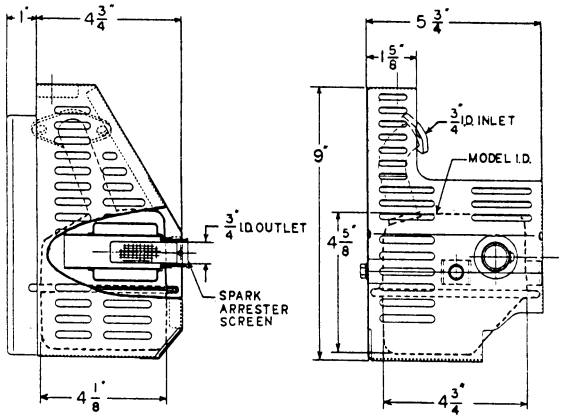

HS-5A

SUZUKI *(continued)*

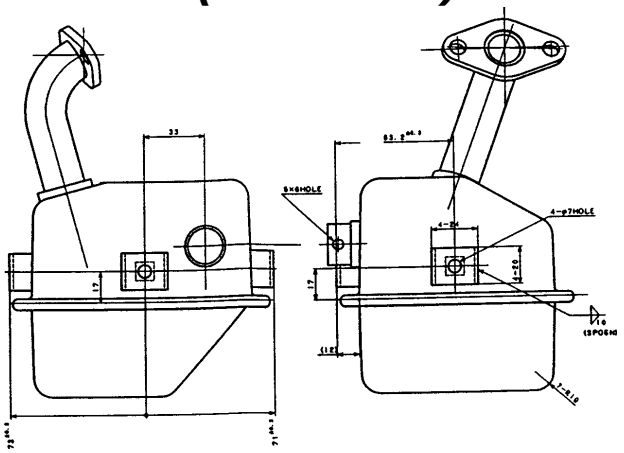

HS-5AB

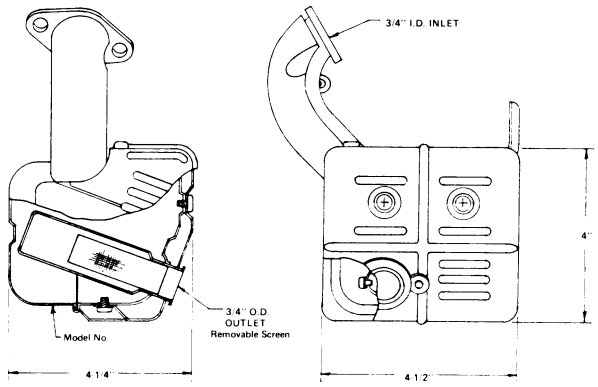

HS-6

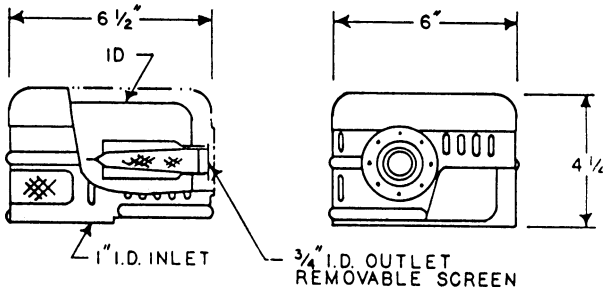

HS-7

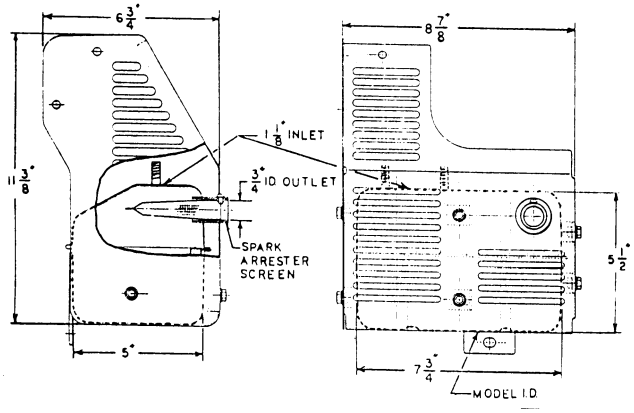

HS-7A

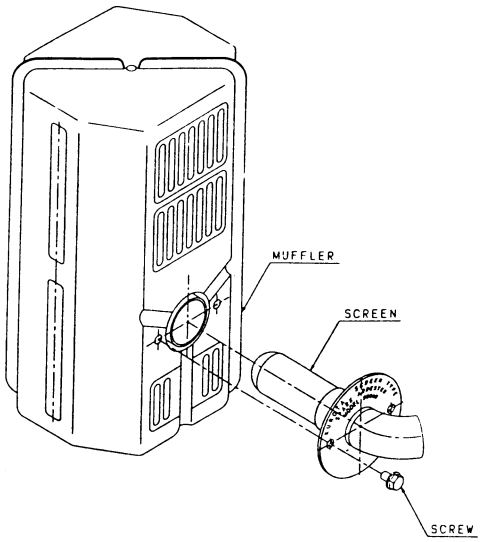

HS-8

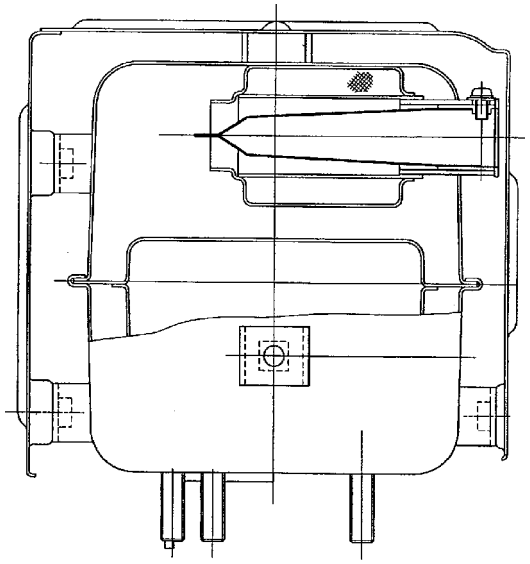

HS-9

SUZUKI *(continued)*

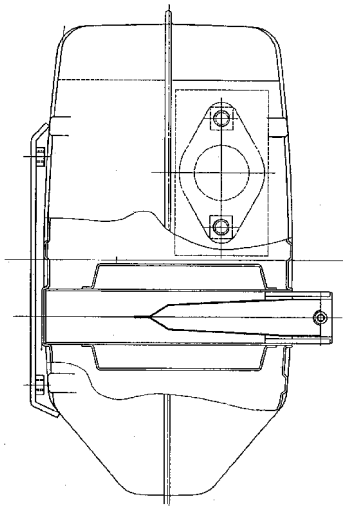

HS-10

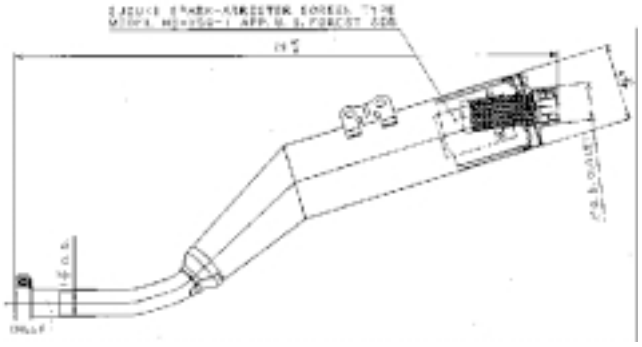

HS-250-1

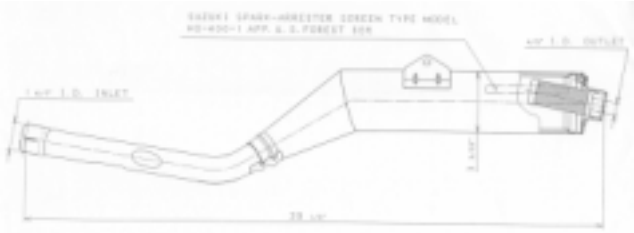

HS-400-1

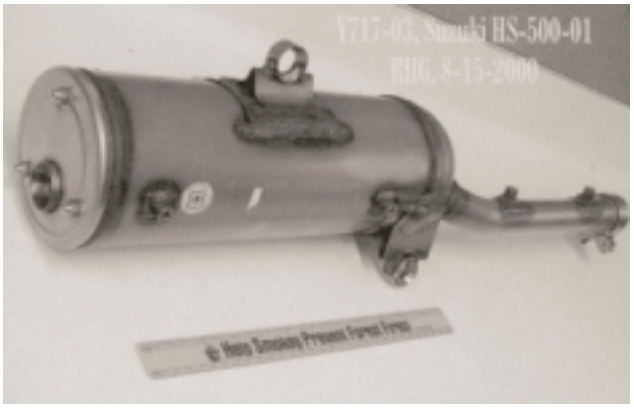

HS-500-1

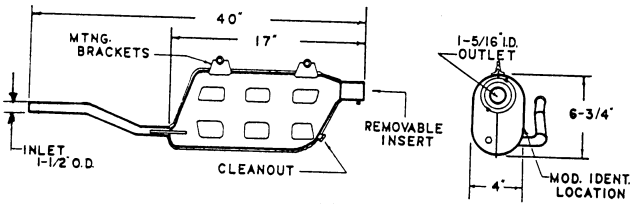

KS-450

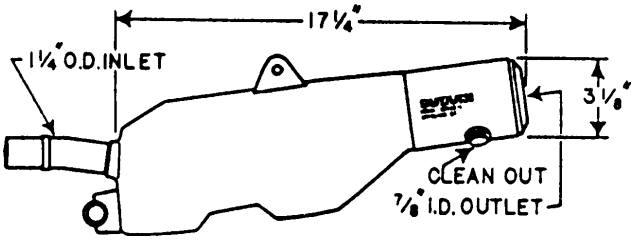

KS-450-1

SUZUKI/SUZUKI-KRIZMAN

SUZUKI *(continued)*

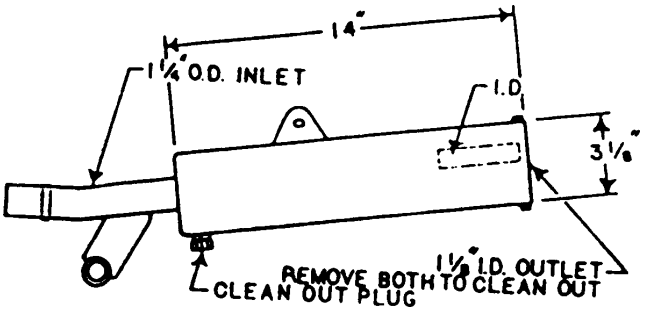

KS-450-2

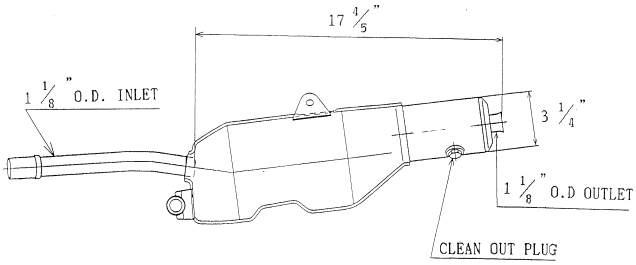

KS-450-3

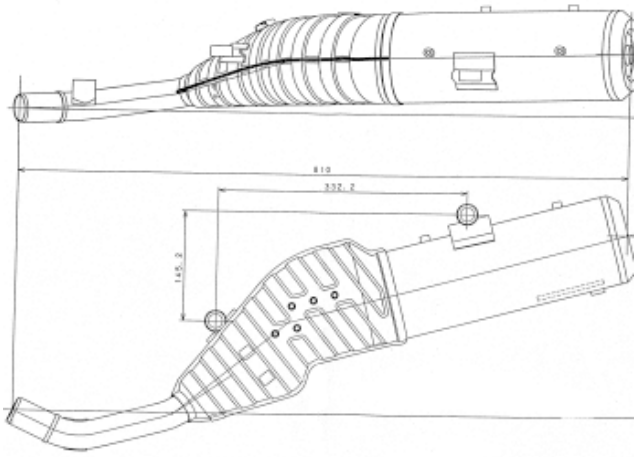

Sparester 21

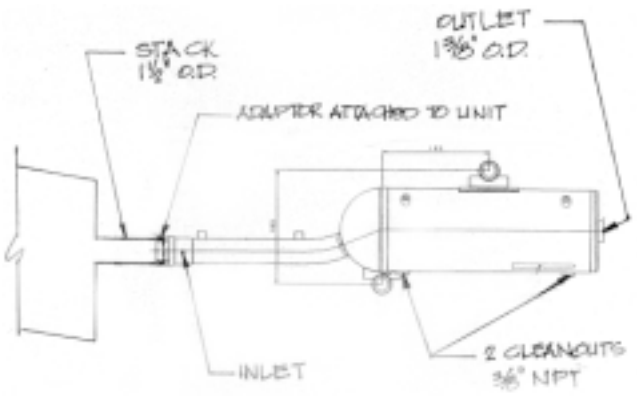

Sparester 23

SUZUKI-KRIZMAN

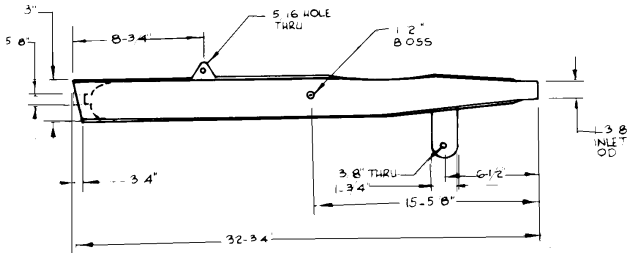

K-15

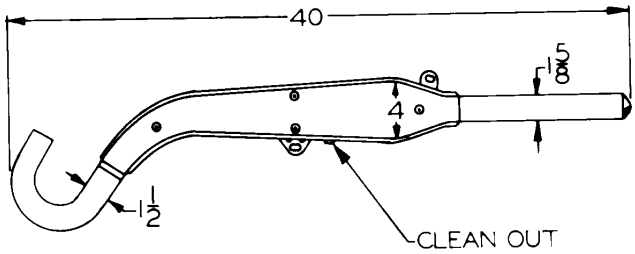

KS-250

SUZUKI-KRIZMAN *(continued)*

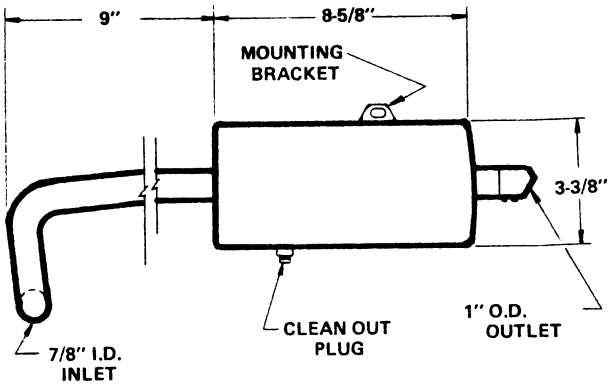

KS-250
(for ALT 50)

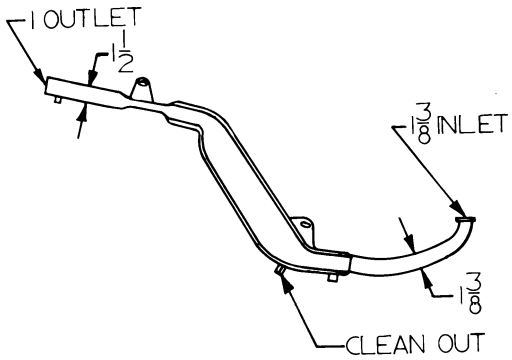

KS-250
(for TM 75)

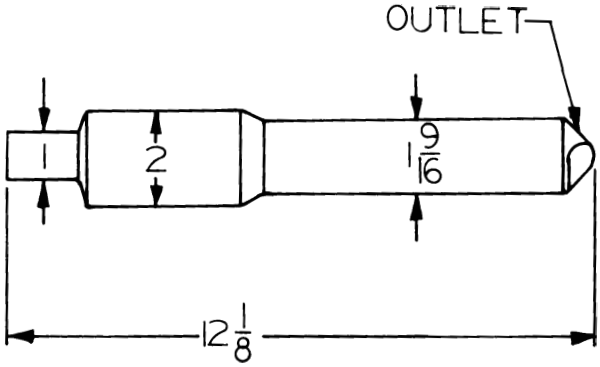

KS-250
(for TS 80)

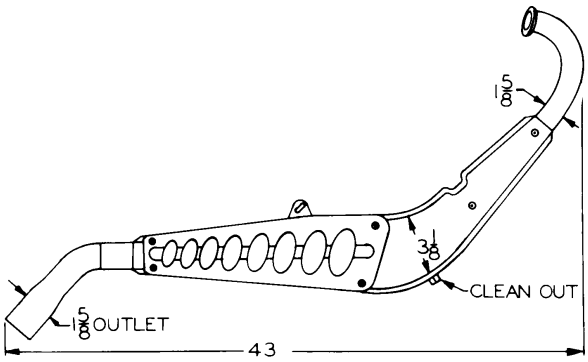

KS-250M

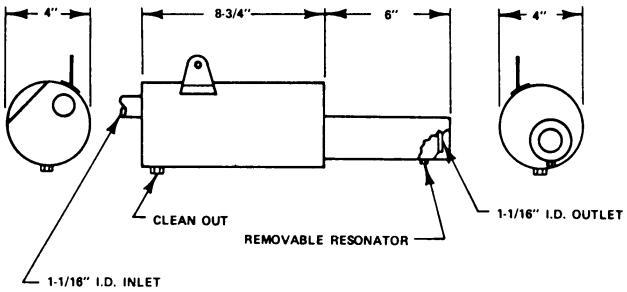

KS-350-3

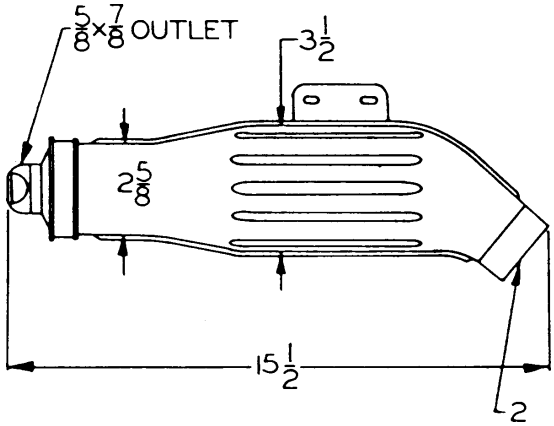

KS-400

SUZUKI-KRIZMAN *(continued)*

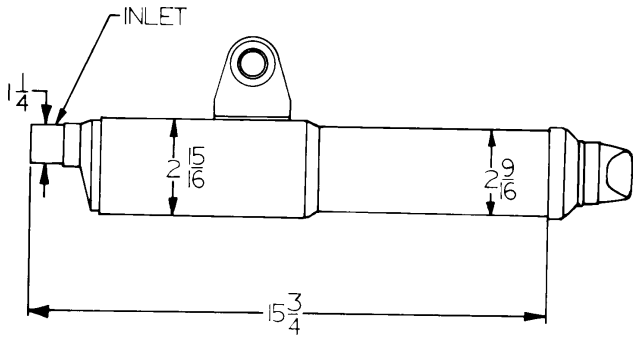

KS-400
(for P.E. 250)

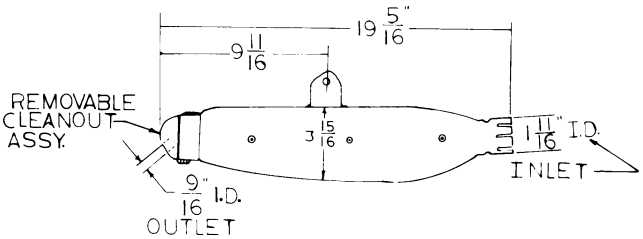

KS-400-1

SUZUKI-SPARESTER

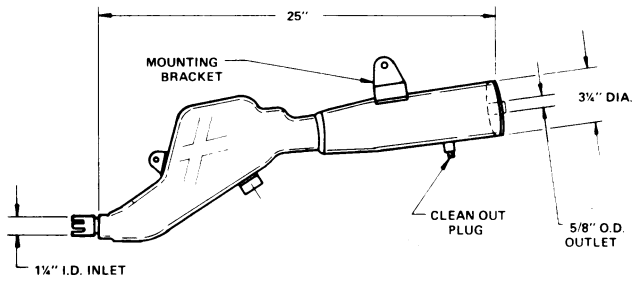

801
801 X0523X

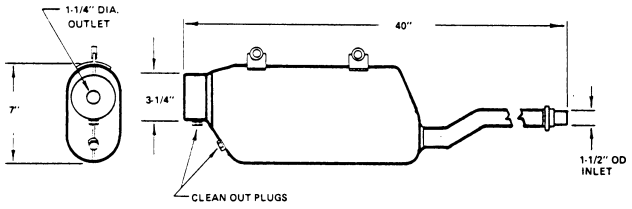

801 LT 500R

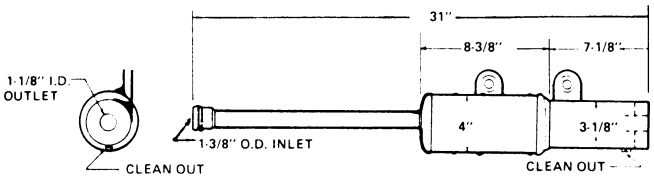

801 X19AOX

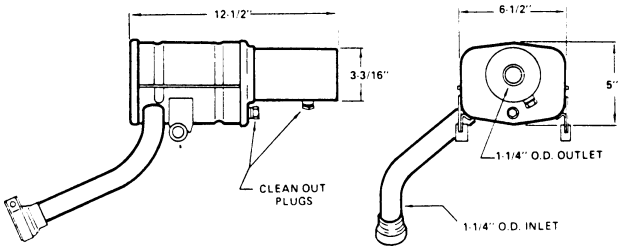

801 X19BOX

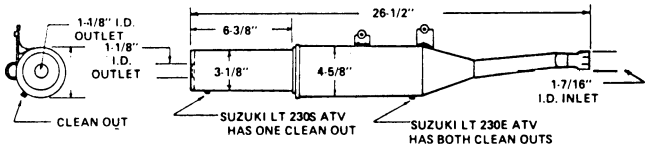

801 X22AOX

TAYLOR

TAYLOR

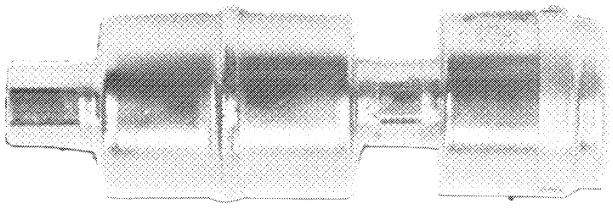

100
(SCREEN TYPE)

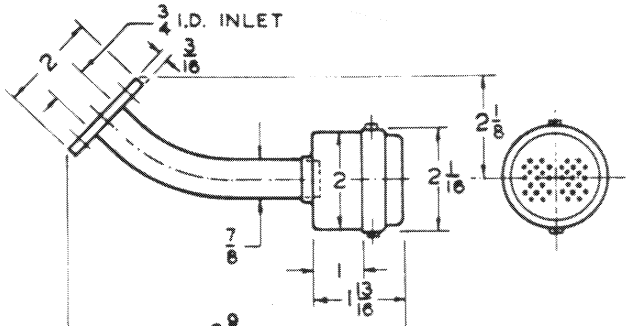

200

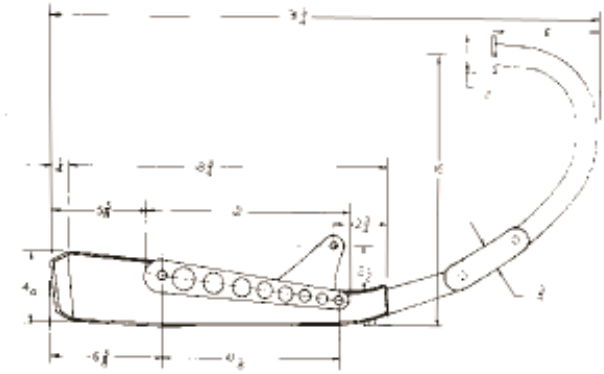

300

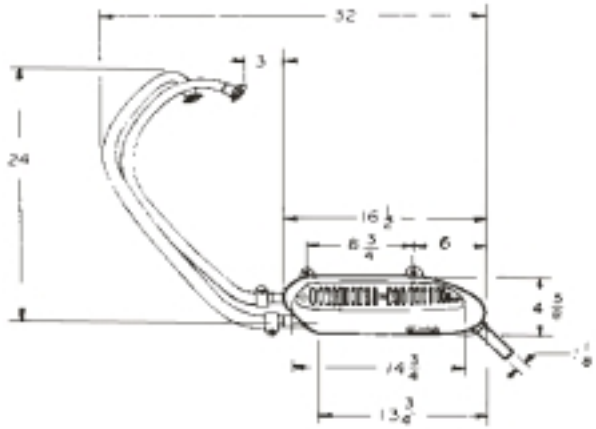

400

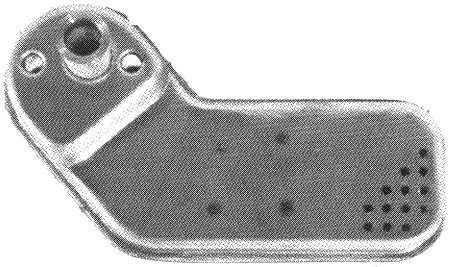

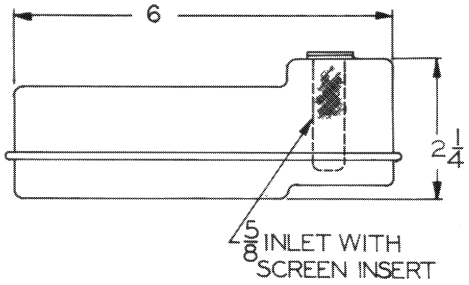

400A

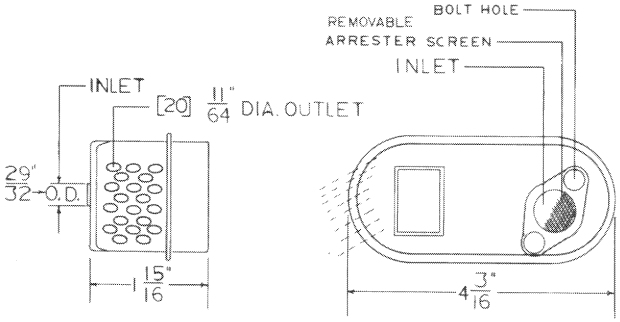

750

TAYLOR *(continued)*

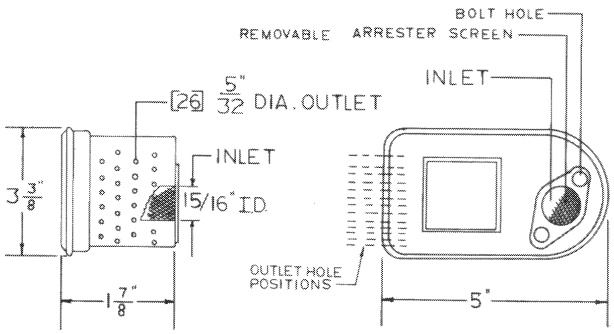

750A

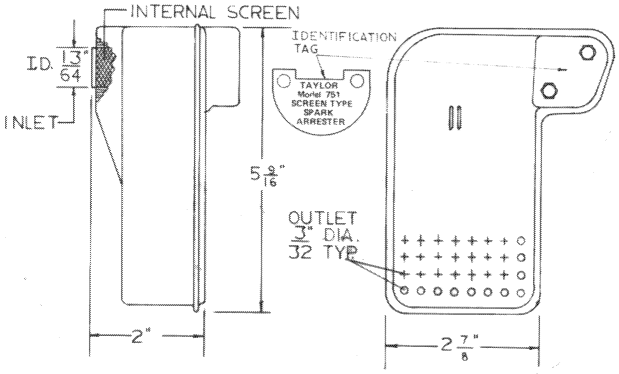

751

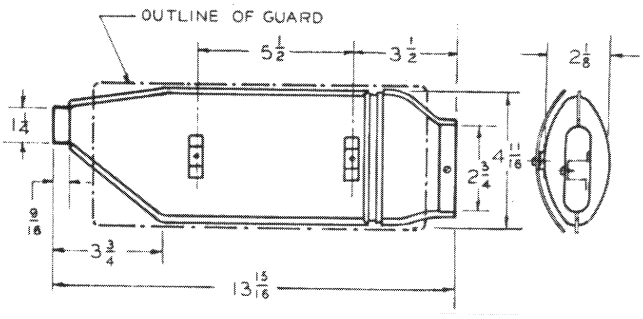

800

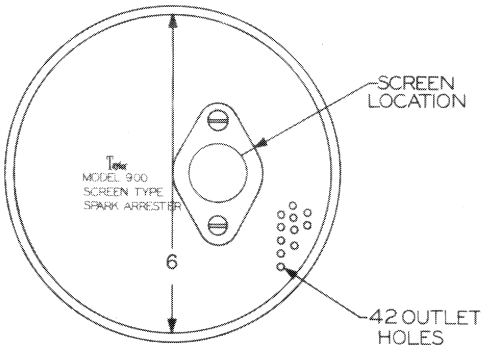

900

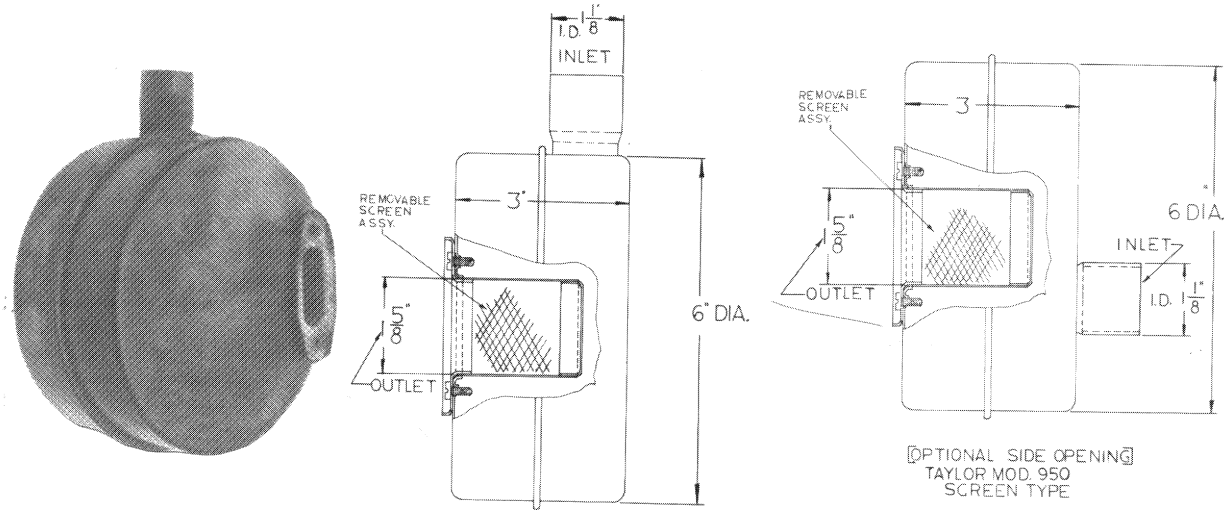

950

TECK

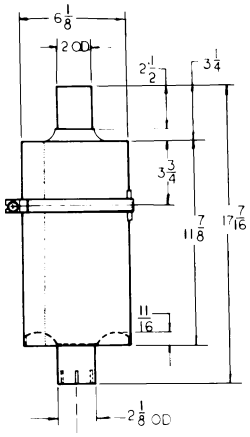

1-6250C

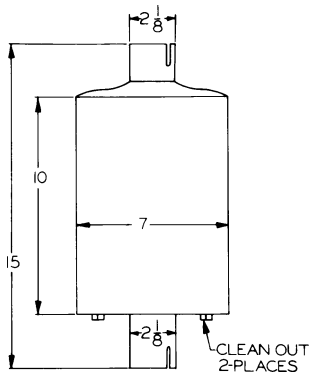

SS-860-2

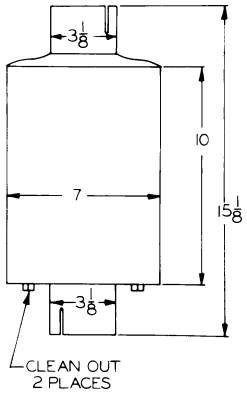

SS-860-3

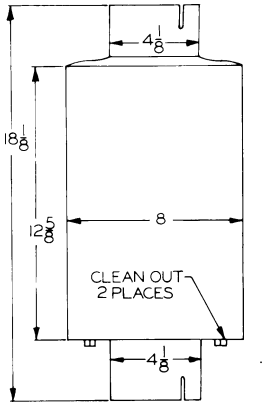

SS-860-4A

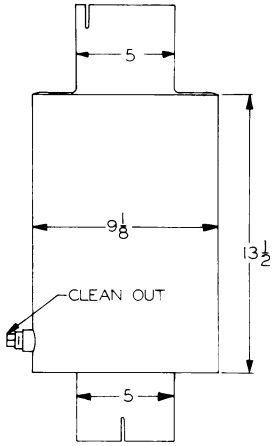

SS-860-5

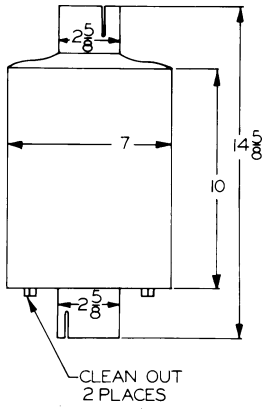

SS-860-25

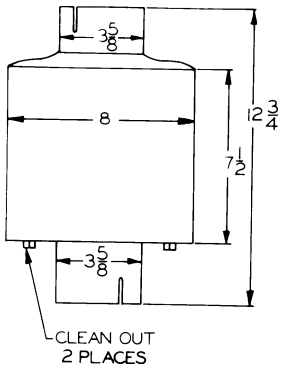

SS-860-35

TECUMSEH

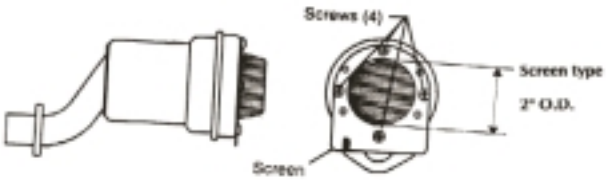

35352

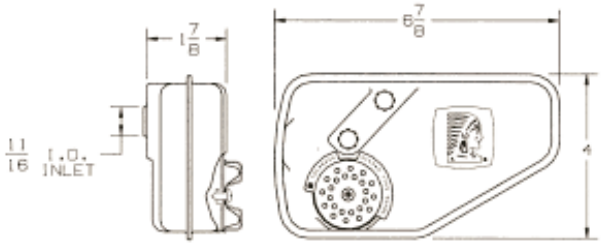

36085

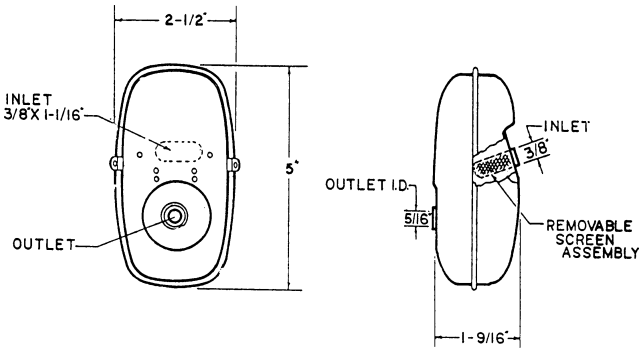

390301A

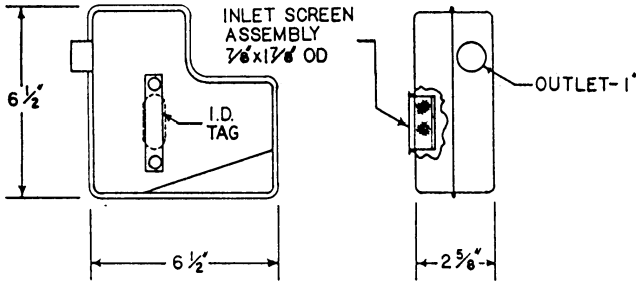

390309

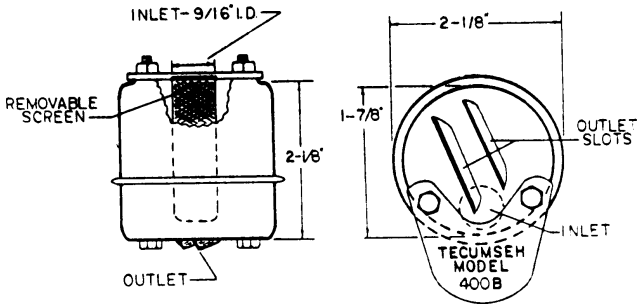

400B

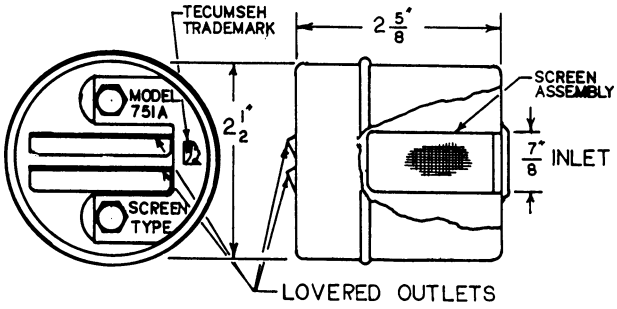

751A

TILLERY/TORO

TILLERY

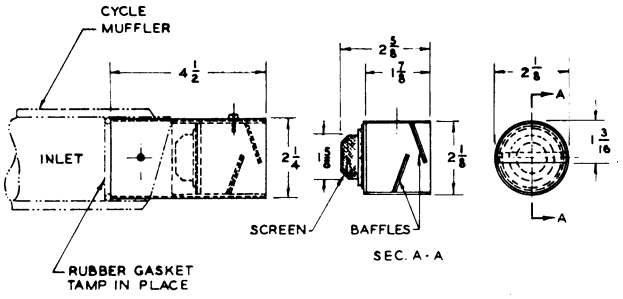

T-134
(SCREEN TYPE)

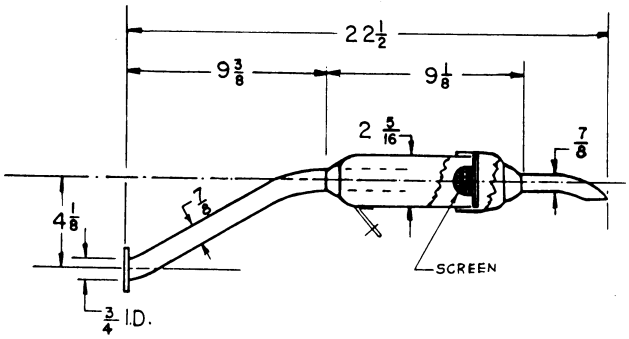

T-234
(SCREEN TYPE)

TORO

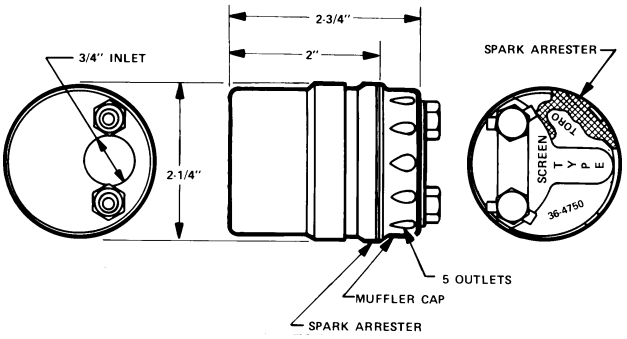

36-4750

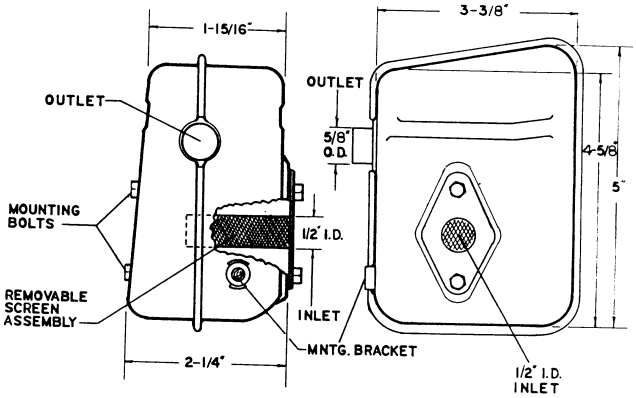

56-6730

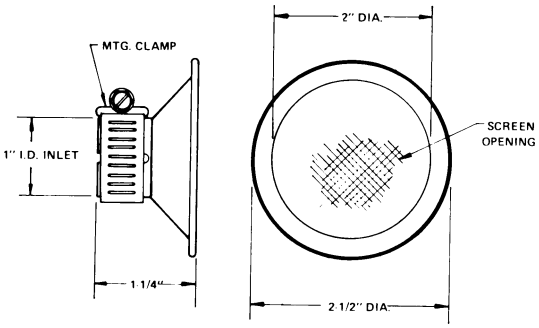

81-0200

TORQUE

TORQUE

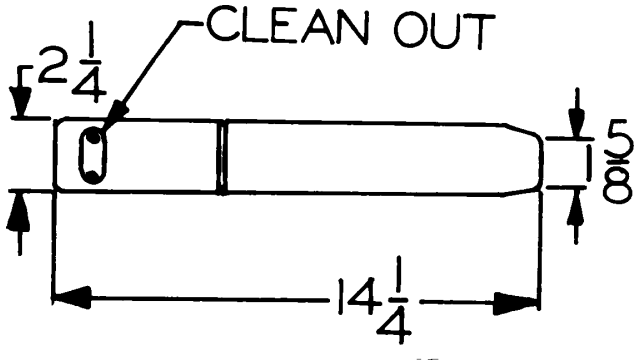

TQ-1000

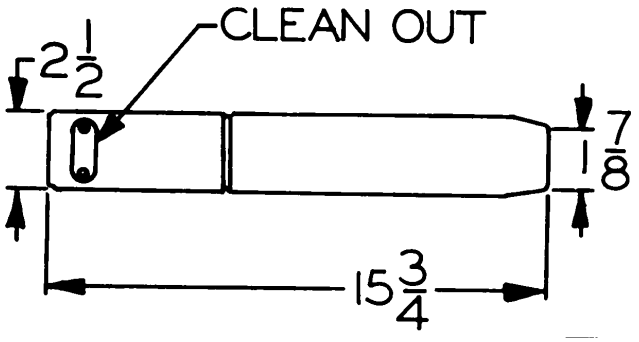

TQ-2000

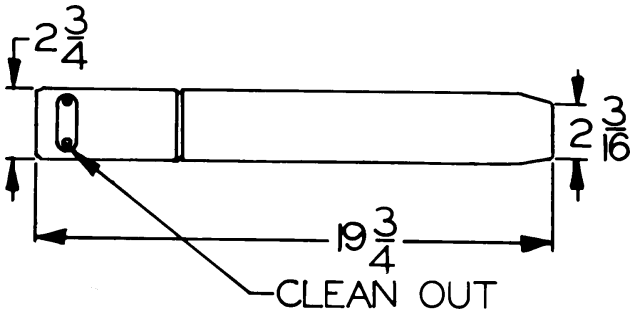

TQ-3000

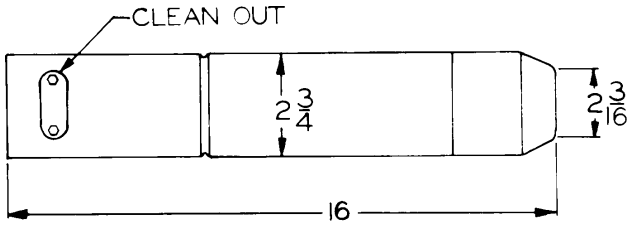

TQ-3000A

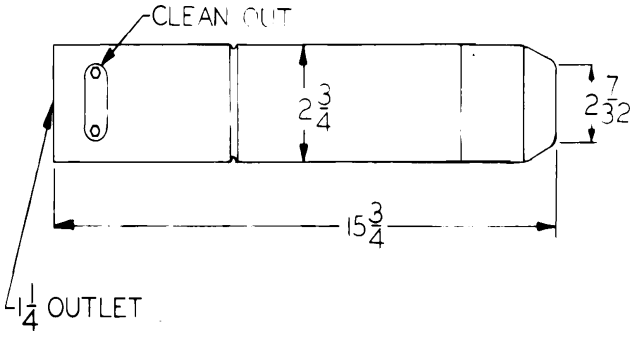

TQ-3000B

USDA/WACKER

USDA

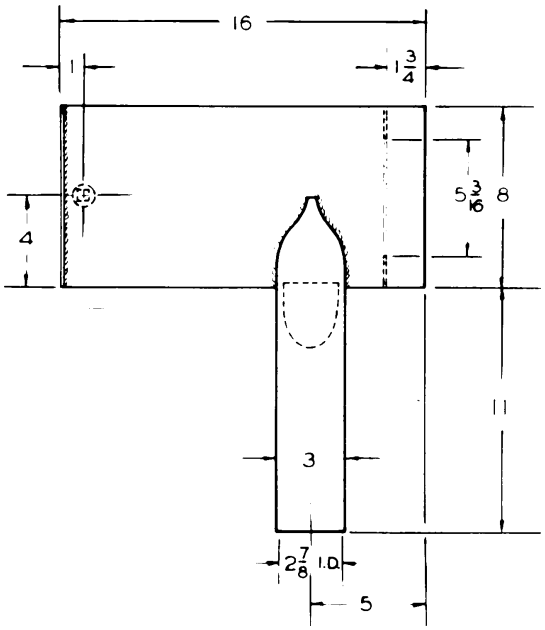

FS-3

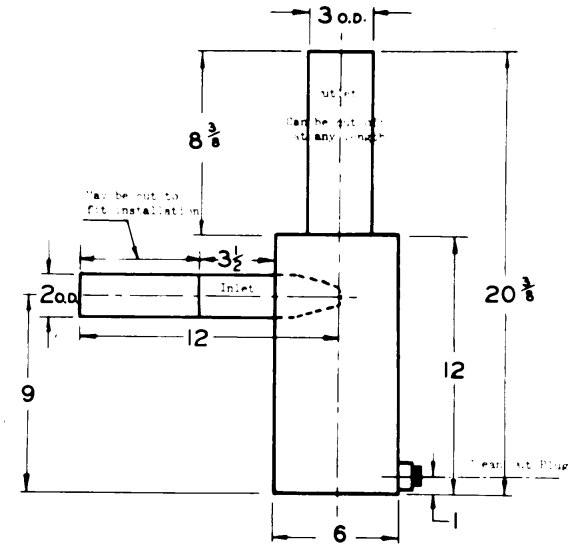

FS-4

WACKER

No diagrams available:

Refer to General Purpose Qualification Table at end of section for rating.

WAJAX PACIFIC/WALKER

WAJAX PACIFIC

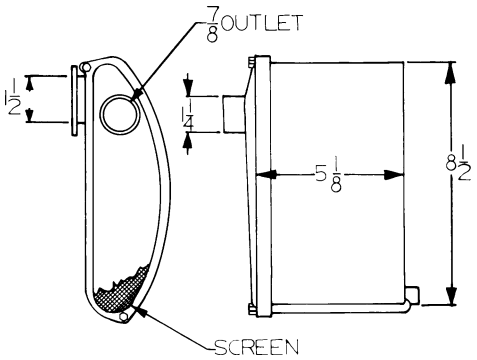

MODEL 2

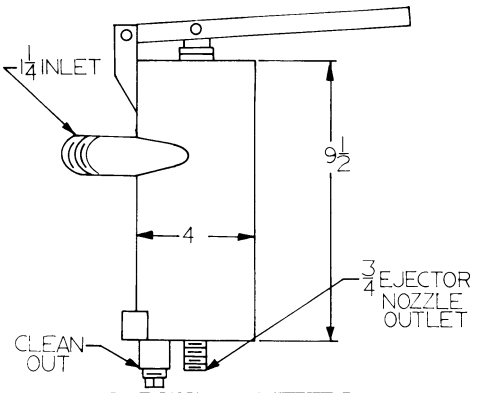

D-4479

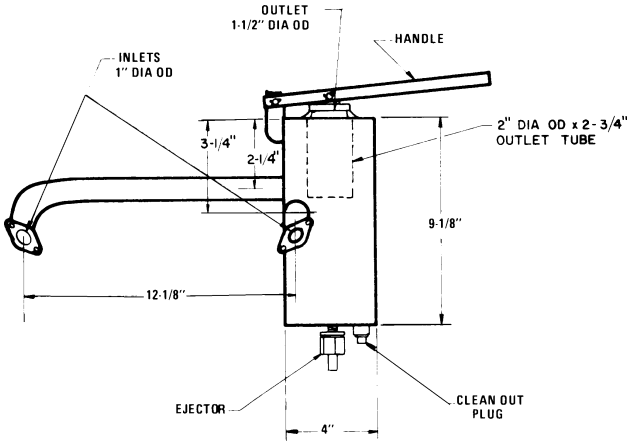

PB-1196

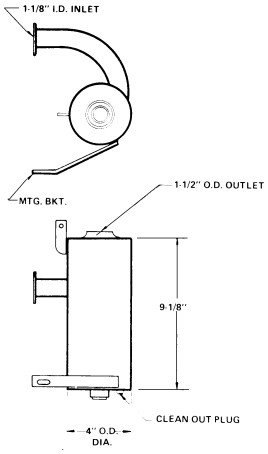

PC-1216

WALKER

No diagrams available:

Refer to General Purpose Qualification Table at end of section for rating.

WASHINGTON/WHITE BROTHERS

WASHINGTON

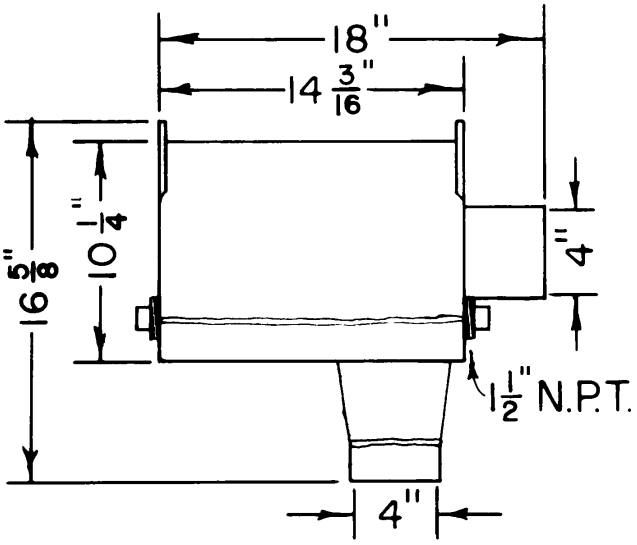

NO. 3

WHITE BROTHERS

No diagrams available:

Refer to General Purpose Qualification Table at end of section for rating.

WILDFIRE PACIFIC/WINTEC/XDUCER

WILDFIRE PACIFIC

No diagrams available:

Refer to General Purpose Qualification Table at end of section for rating.

WINTEC

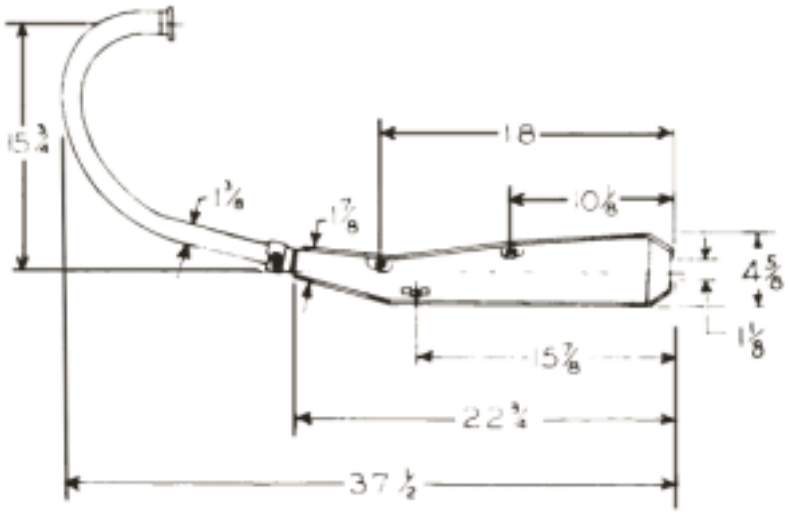

500

XDUCER

No diagrams available:

Refer to General Purpose Qualification Table at end of section for rating.

YAMAHA

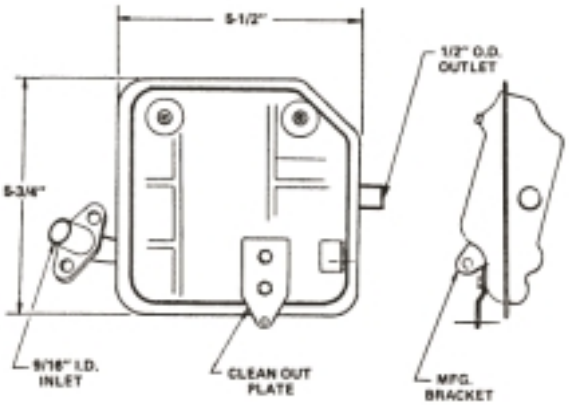

EG 106

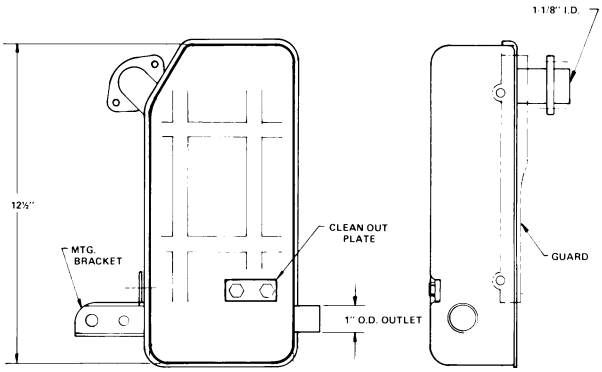

EG 107

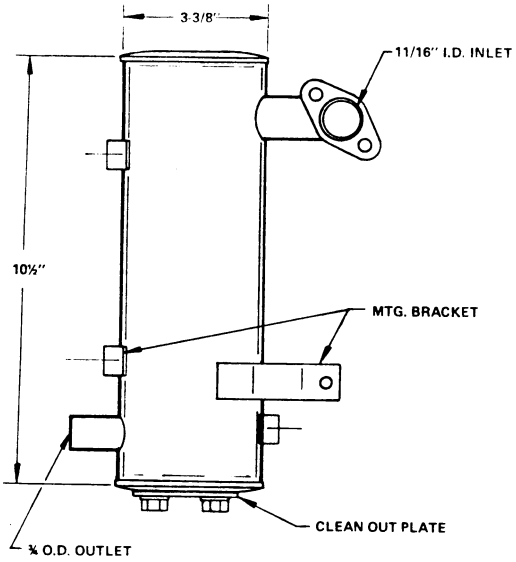

EG 108

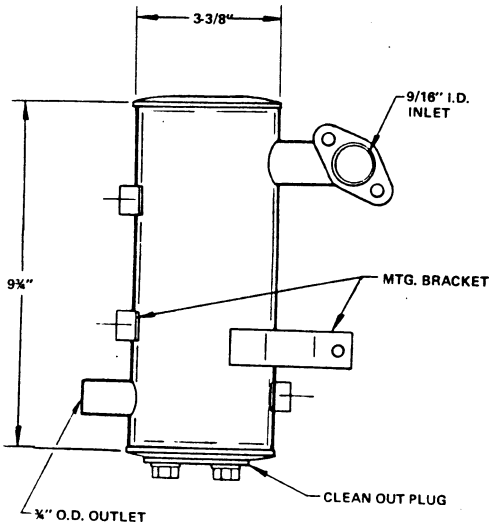

EG 109

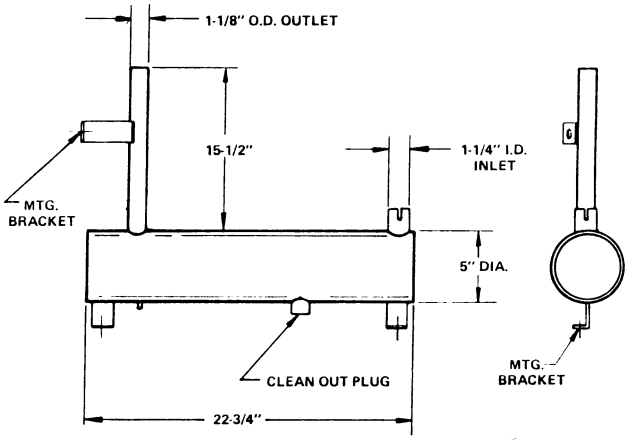

EG 110

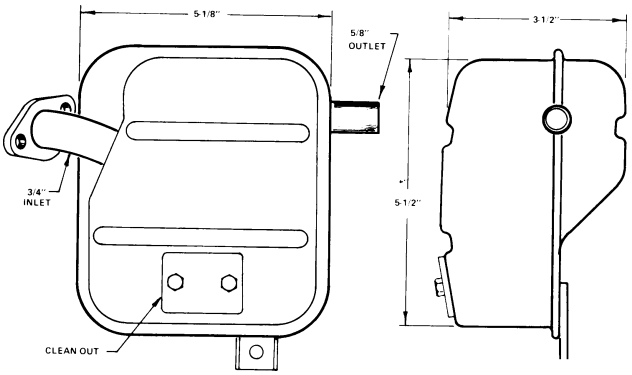

EG 111

YAMAHA *(continued)*

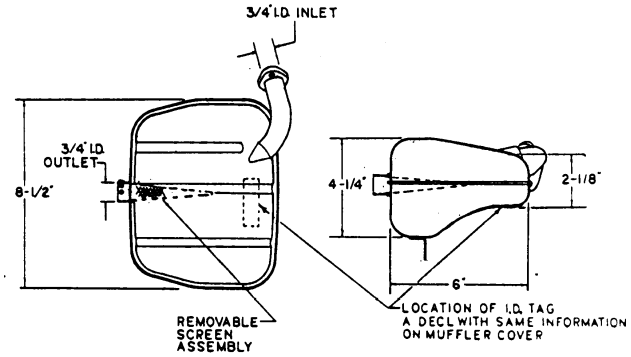

EG 113

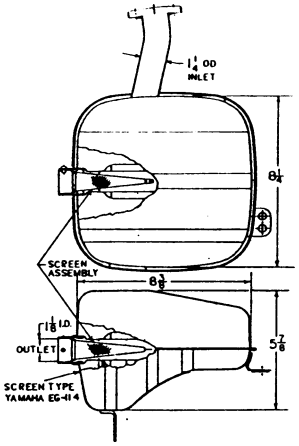

EG 114

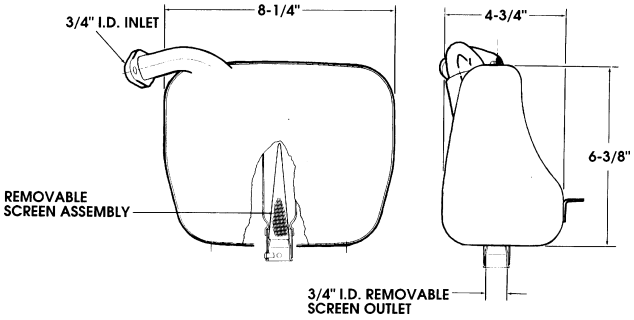

EG 116

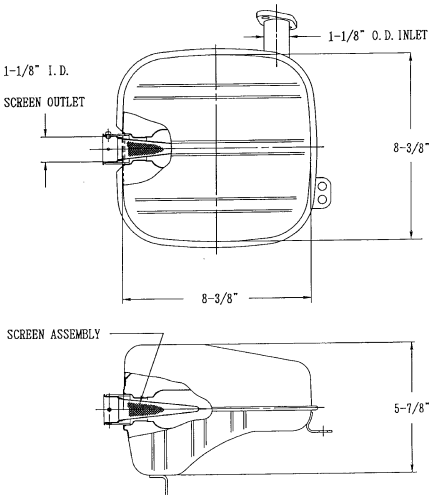

EG 117A

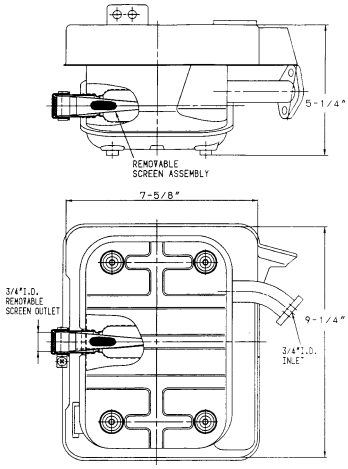

EG 118

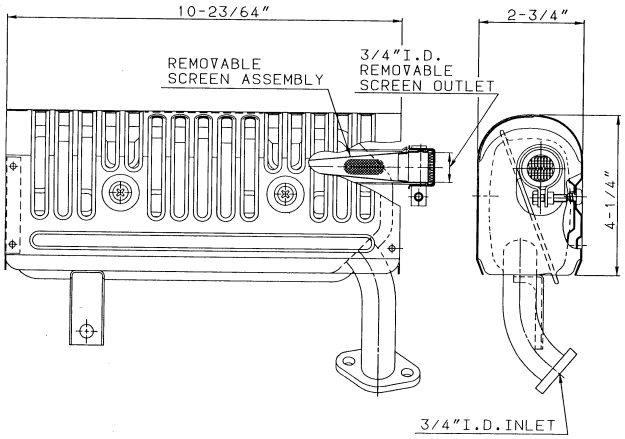

EG 119

YAMAHA *(continued)*

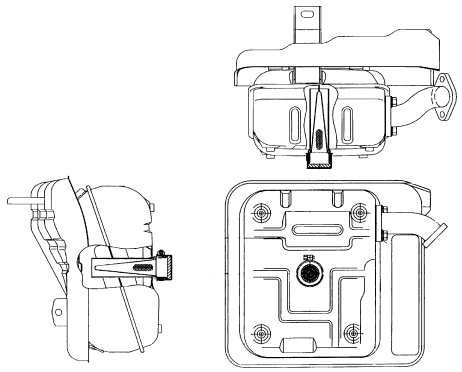

EG-120

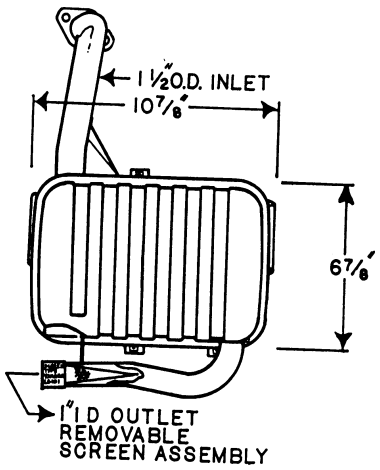

LG 101

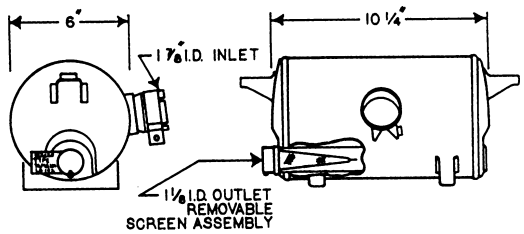

LG 102

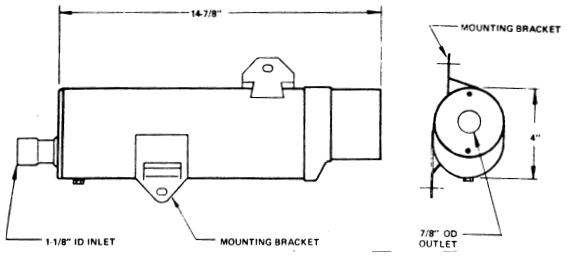

YHM 167A

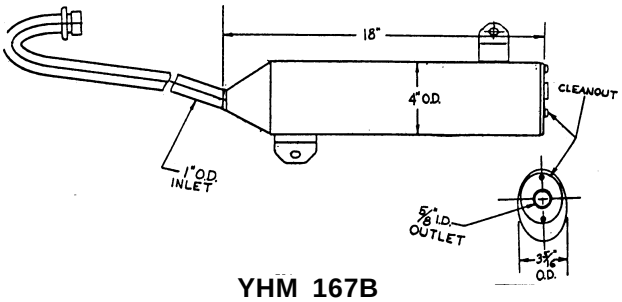

YHM 167B

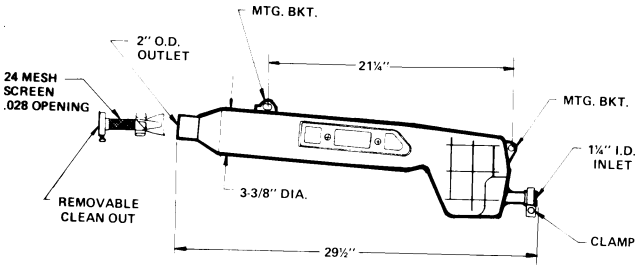

YHM 200

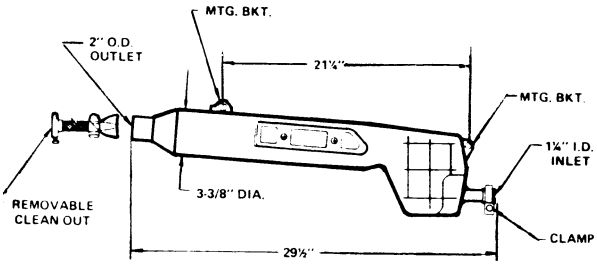

YHM 200A

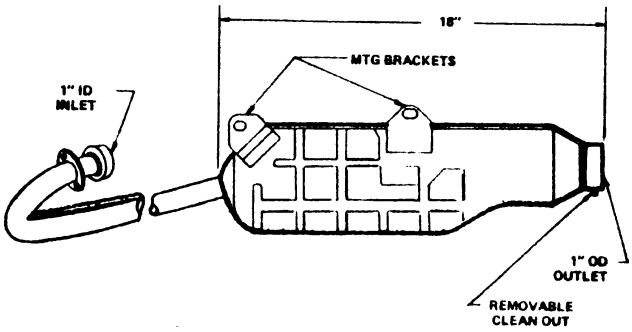

YHM 200B

YAMAHA *(continued)*

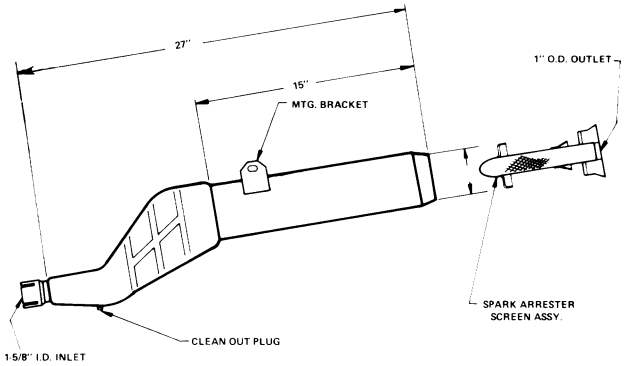

YHM 220

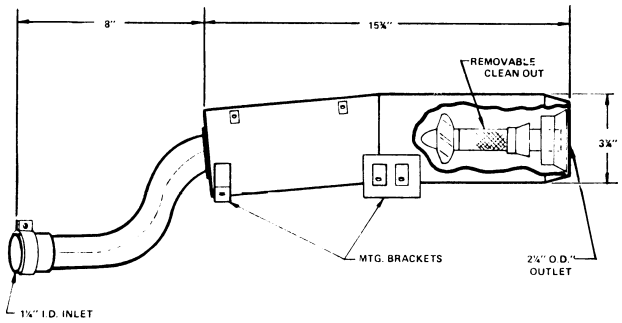

YHM 220A

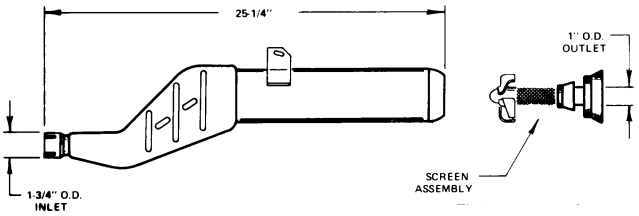

YMH 220B

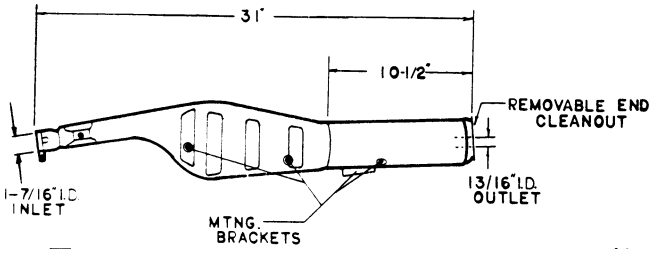

YMH 220C

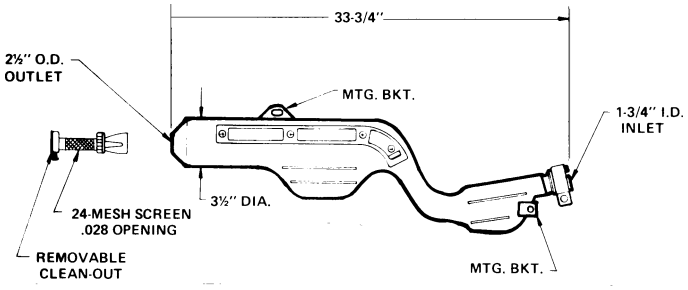

YMH 238

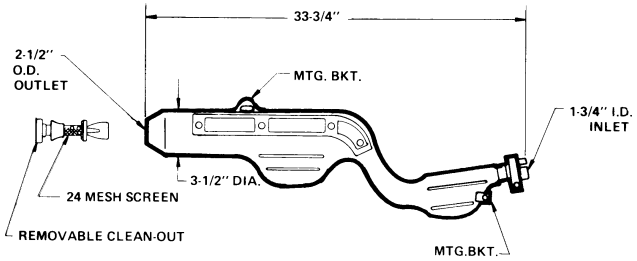

YMH 238A

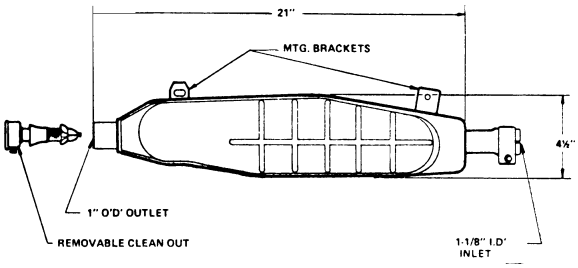

YMH 238B

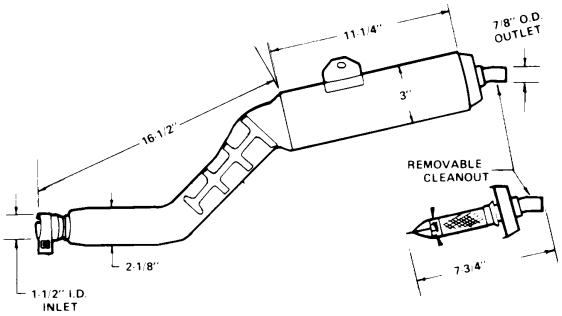

YMH 238C

YAMAHA *(continued)*

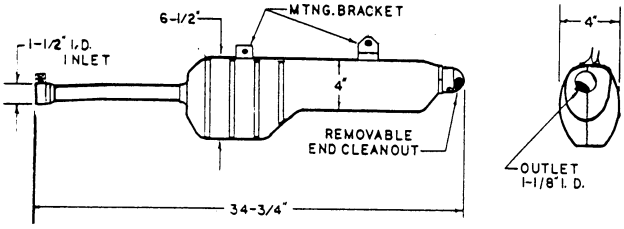

YMH 238D

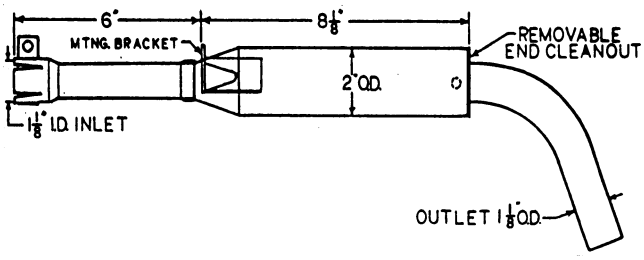

YMH 238E

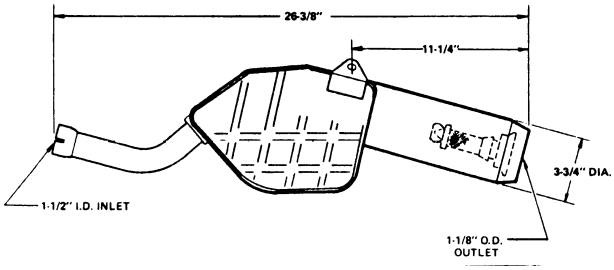

YMH 270

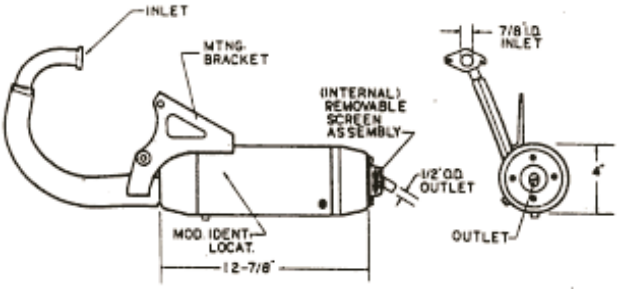

YMS 50

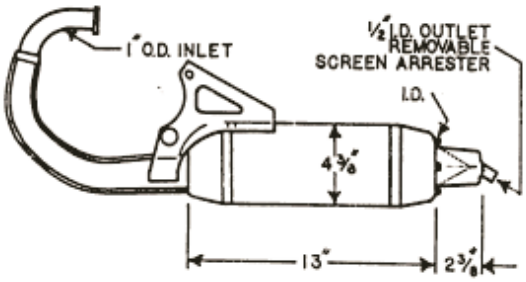

YMS 50A

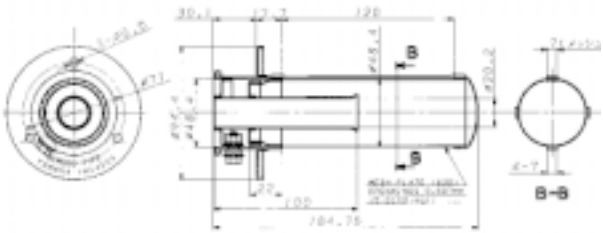

YMS 400A

YAMAHA-KRIZMAN

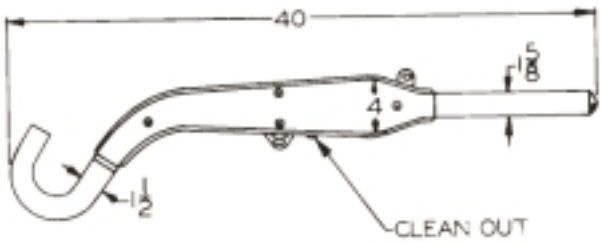

KS 250

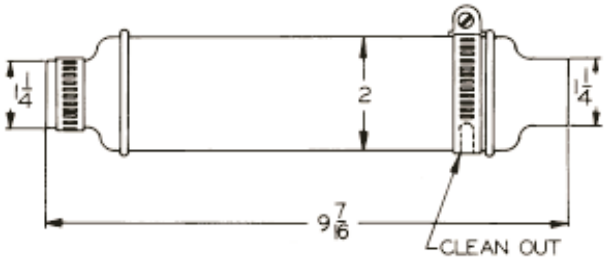

KS 350

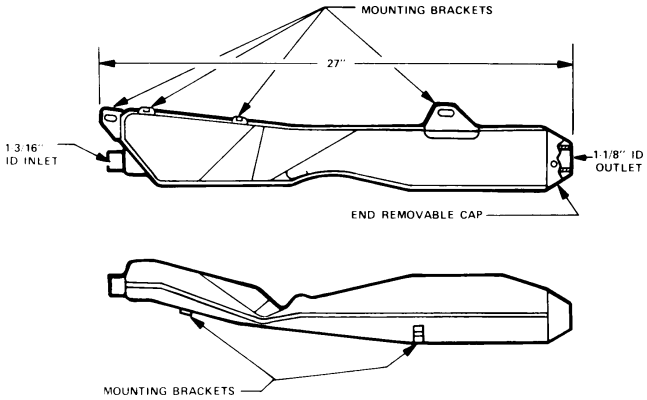

KS 375A

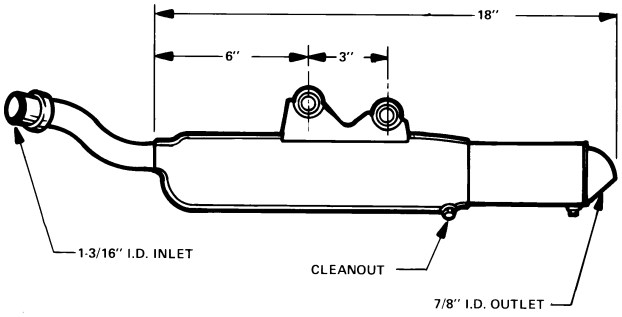

KS 375B

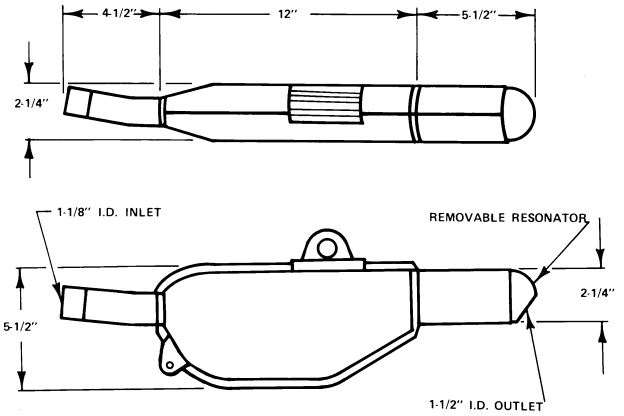

KS 375C

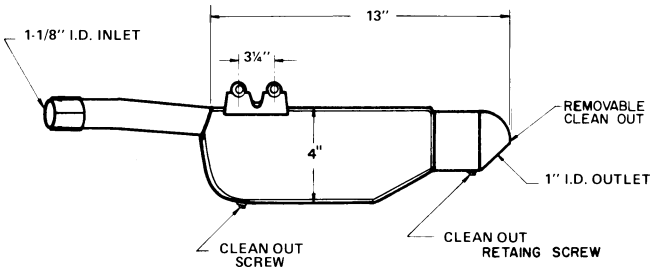

KS 375D

YAMAHA-KRIZMAN *(continued)*

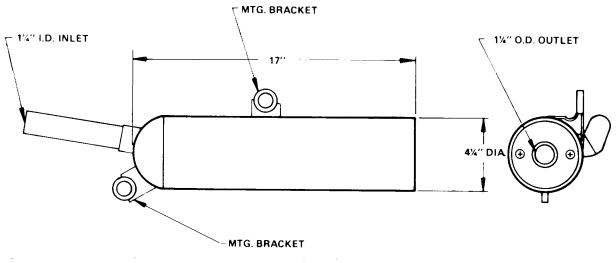

KS 375E

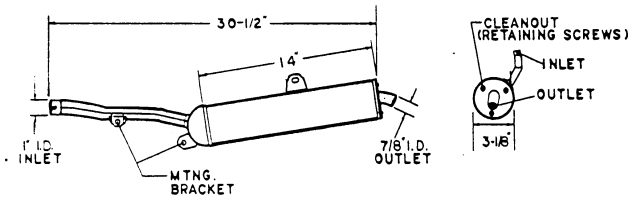

KS 375F

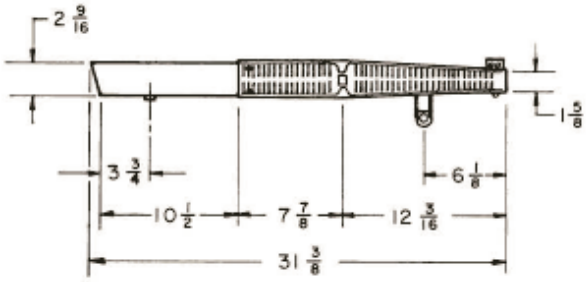

YS 80

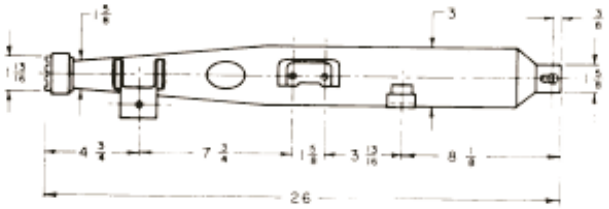

YS 125

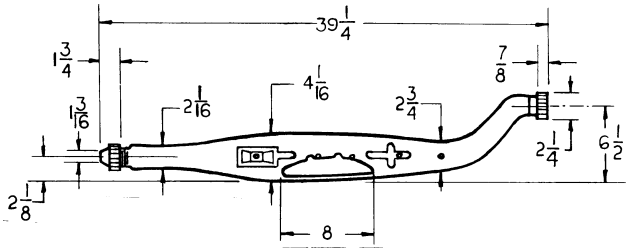

YS 250

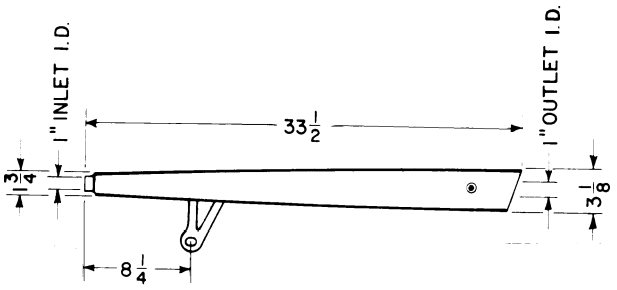

YSU 80

YAMAHA-SKYWAY/YELLOW JACKET

YAMAHA-SKYWAY

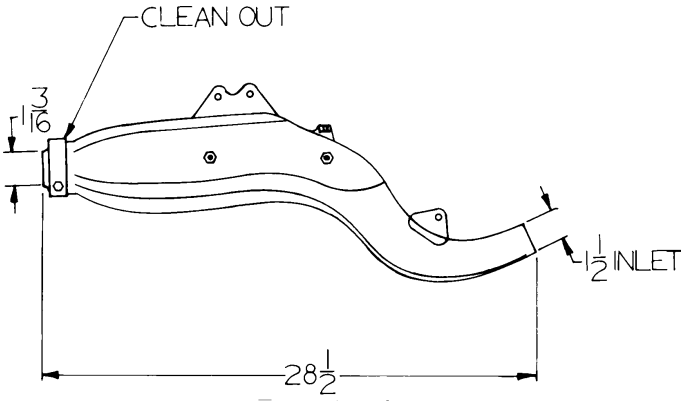

SERIES 300
MODEL 520

YELLOW JACKET

No diagrams available:

Refer to General Purpose Qualification Table at end of section for rating.

YOSHIMURA/YUBA

YOSHIMURA

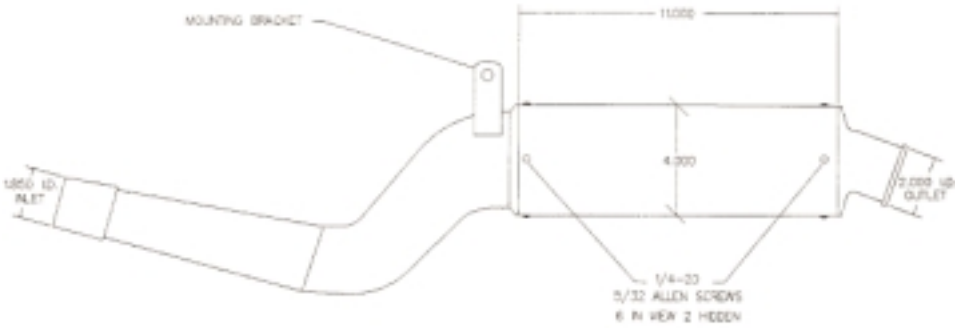

YRD-1Q
YRD-2L

YUBA

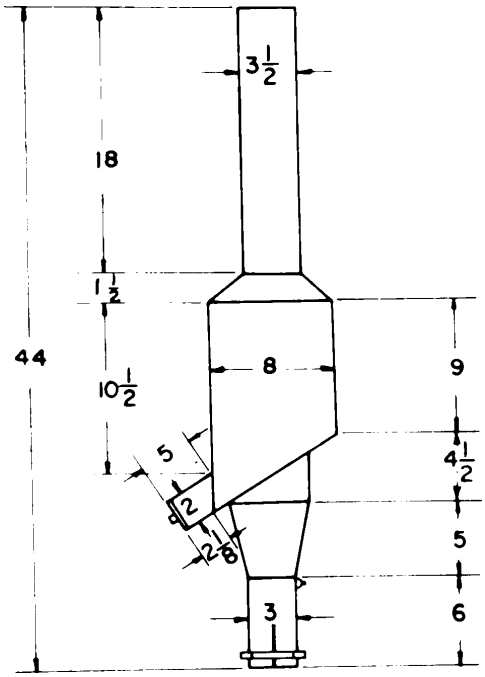

8000

LOCOMOTIVE-TYPE SPARK ARRESTERS

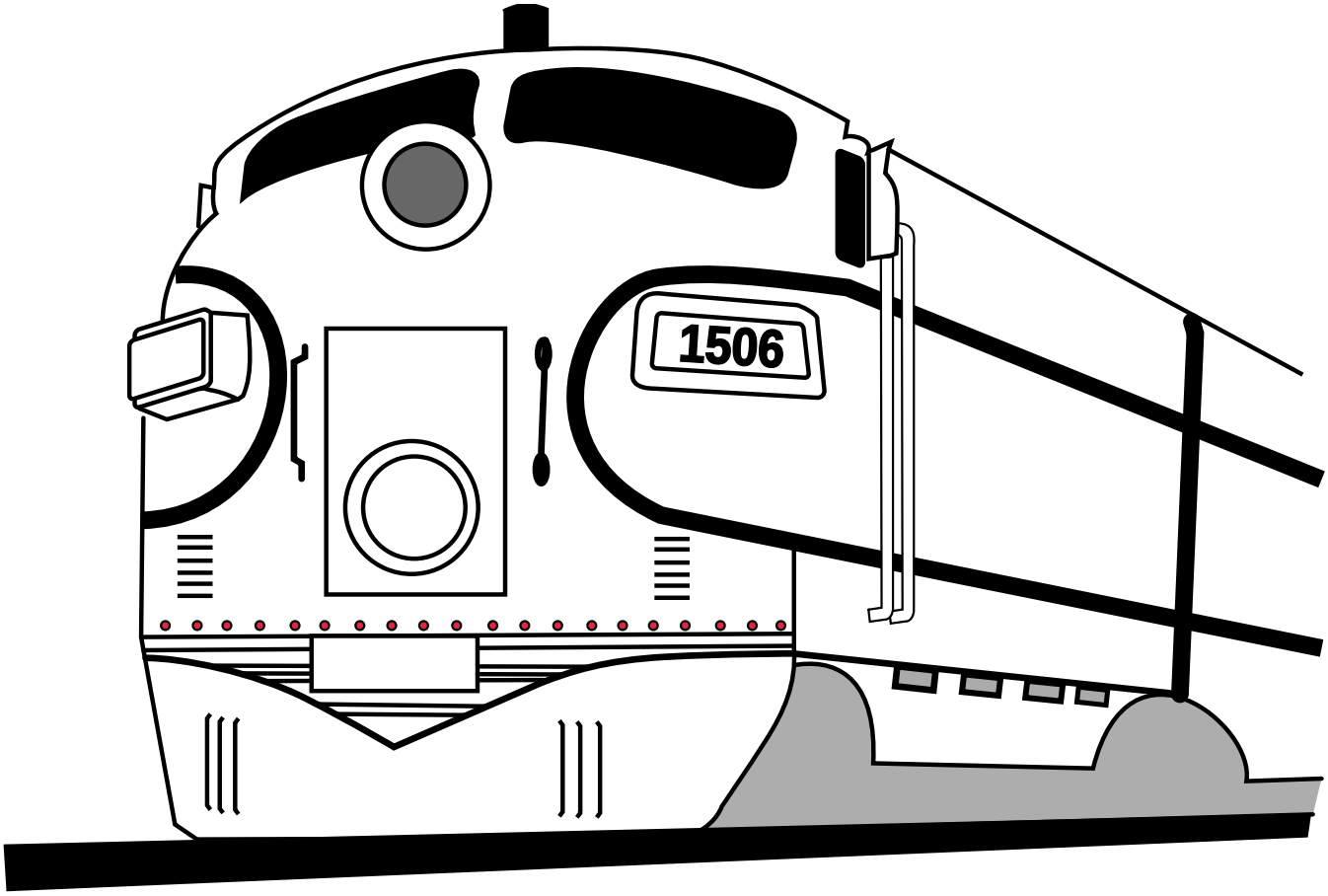

STANDARDS FOR LOCOMOTIVE-TYPE SPARK ARRESTERS

Locomotive-type spark arresters are tested in accordance with the latest revision of the Association of American Railroads (AAR) Recommended Practice RP-557, "Spark Arresters for Non-turbocharged Diesel Engines Used in Railroad Locomotives", Society of Automotive Engineers (SAE) Recommended Practice J342, "Spark Arrester Test Procedure For Large Size Engines," SAEJ997, "Spark Arrester Test Carbon", and USDA Forest Service Standard 5100-1c, "Spark Arresters for Internal Combustion Engines."

These Standards and procedures establish the minimum performance and maintenance requirements for locomotive-type spark arresters.

EXTERNAL ARRESTERS are those designed to be installed on the locomotive exhaust stack or stacks. They may be inside or outside the engine compartment. SAE J350 or Forest Service Standard 5100-1c test procedures are used for this type arrester.

INTERNAL or MANIFOLD-TYPE ARRESTERS make use of the engine manifold and are installed below the locomotive profile. This type arrester is tested against SAE J342 or ARR Recommended Practice, RP-557.

LOCOMOTIVE-TYPE SPARK ARRESTER INSPECTION PROCEDURES

1. Look for the locomotive manufacturer's name on the locomotive frame below the cab.

Note:

- Newer General Electric (GE) locomotives are all turbocharged.
- Electro-Motive Division (EMD) locomotives can be both turbo- and nonturbocharged, with and without a muffler.
- You will occasionally inspect an older locomotive of some other brand. The inspection procedures are similar. Determine if it is turbo- or nonturbocharged and if an arrester is needed or not.

2. If it has an arrester, look for the manufacturer's name and model number on the body of the arrester. They **must** be stamped on the metal body or on an attached metal plate. Internal arresters **must** be stamped in the metal body or on an attached metal plate affixed to the manifold.

3. If identification is established, then check the "Qualified and Rated" list.

4. If the arrester cannot be identified *(i.e., tag missing)*, determine if the arrester is an internal arrester *(manifold type),* or an external arrester *(generally mounted on the exhaust stack).*

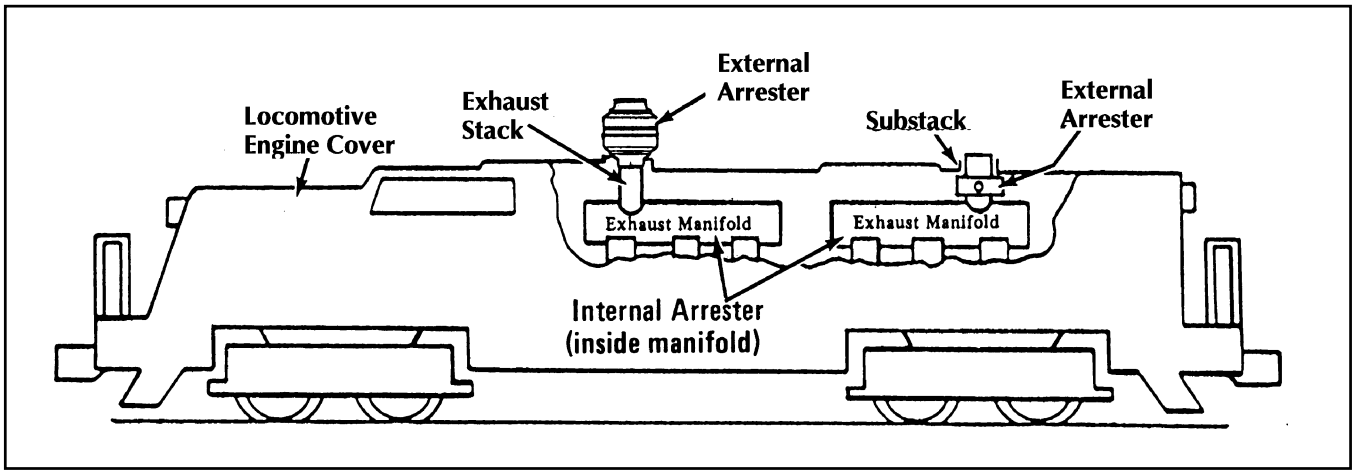

TYPICAL LOCOMOTIVE
Location of Internal and External Spark Arresters

5. Then turn to the locomotive identification section and check the illustrations for configuration of body type to identify make and model possibilities.

6. Check the “Qualified and Rated” pages to determine if it is qualified.

*(**Note:** The two most often found are FARR and HAPCO.)*

Inspection

1. Turbocharged Locomotives
   - Inspect for carbon build-up on the eductor tubes and exhaust stack *(no arrester is required).*
   - On muffler equipped locomotives,you will have to remove or have the eductor removed for inspection.

*(**Note:** The locomotive will have one exhaust stack.)*

2. Nonturbocharged Locomotives
   - Inspect for correct application of arrester.
   - Arrester properly cleaned and maintained.
   - Exhaust system in good order.

*(**Note:** The locomotive can have up to four exhaust outlets and will require up to four spark arresters).*

3. Steam Powered Locomotives
   - Inspect for a screen over the entire exhaust stack that has been maintained in good order. Check your agency rules and regulations.

4. Tools needed for an inspection:
   - Miscellaneous hand tools
   - Coveralls
   - Gloves
   - Goggles
   - Flashlight
   - Mirror
   - Carbon particle collection containers.

More detailed instructions are found in the NWCG publication “Railroad Inspection Handbook", and the NWCG video, "Spark Arresters and the Prevention of Wildland Fires".

Identification Key

EXTERNAL SPARK ARRESTERS are fitted to the exhaust stack of a conventional locomotive exhaust manifold. They are identified by the manufacturers name and model number.

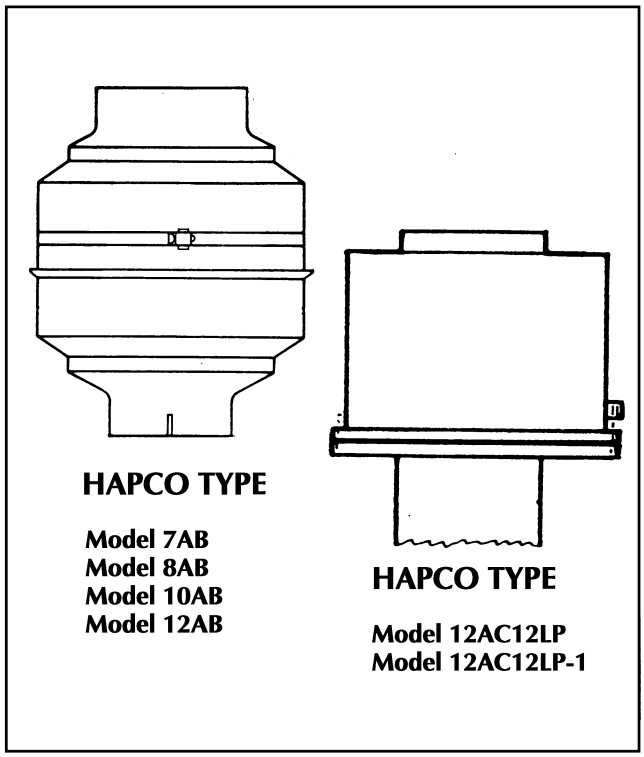

INTERNAL OR MANIFOLD-TYPE

Spark arresters have seven basic body variations referred to as Types I through VII. Each of these body types may use one or more of four leg configurations referred to as A-swirl leg, B-bent leg, C-straight leg, or D-short straight leg. *See the following pages for illustrations.*

Qualified internal arresters may be redesigned manifolds or they may be originally designed as spark arrester manifolds. They can have any combination of body type and leg configuration as shown on the following pages and as listed on the individual qualification.

The appropriate model number will appear on the spark arrester name plate and correspond to drawing numbers on file at SDTDC.

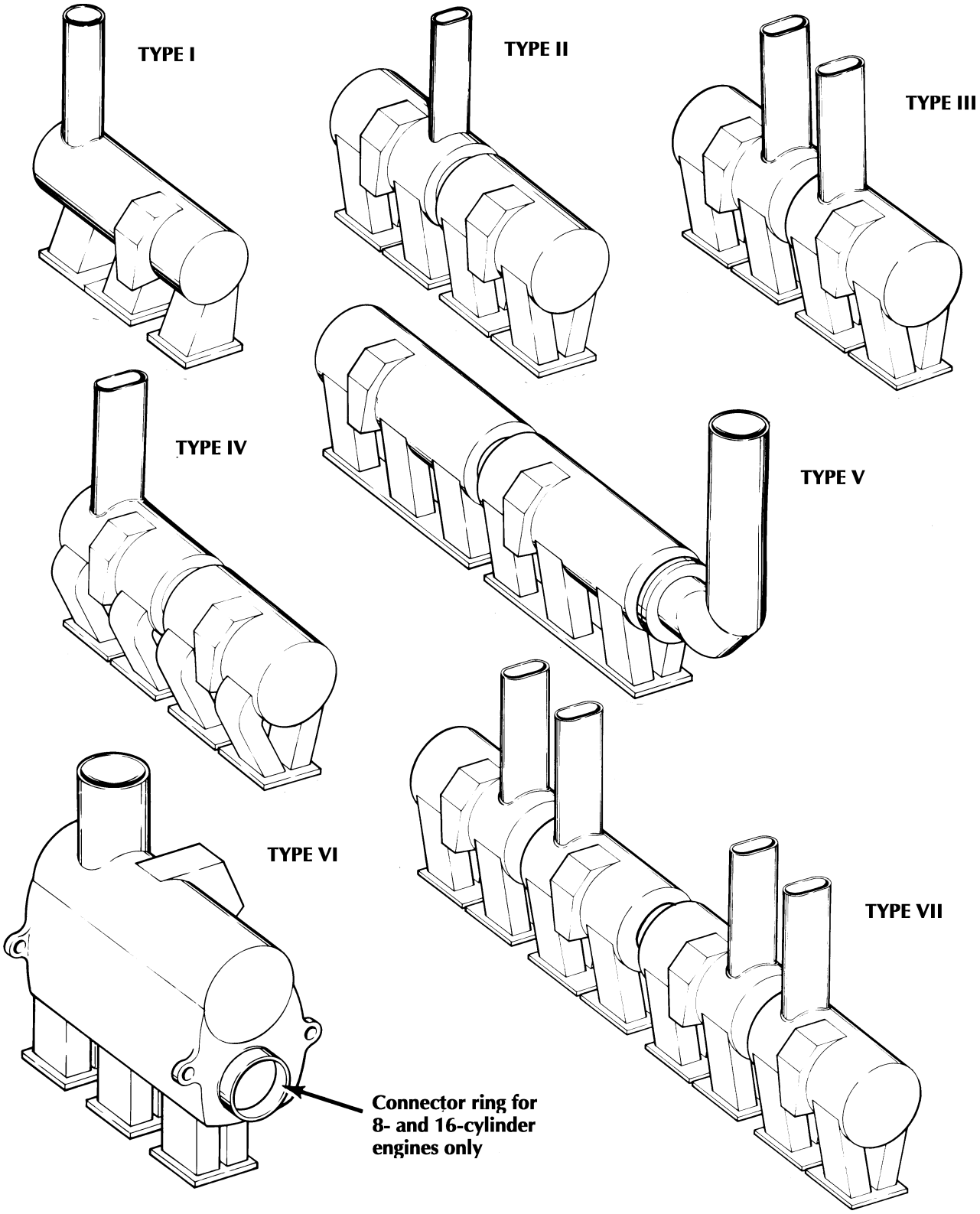
TYPE I
TYPE II
TYPE III
TYPE IV
TYPE V
TYPE VI
TYPE VII
Connector ring for 8- and 16-cylinder engines only

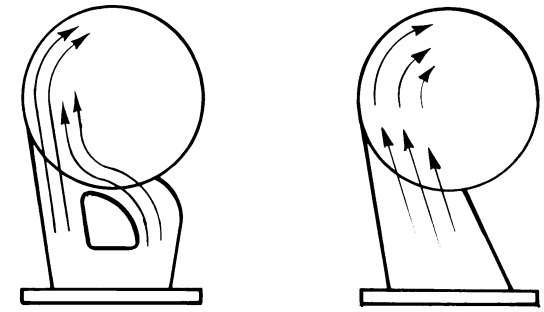

TYPE A SWIRL

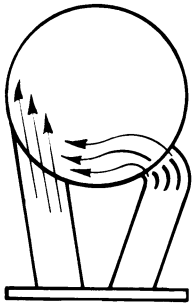

TYPE B BENT

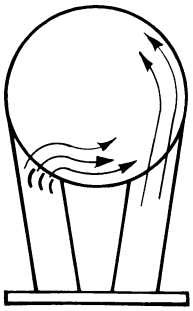

TYPE C STRAIGHT

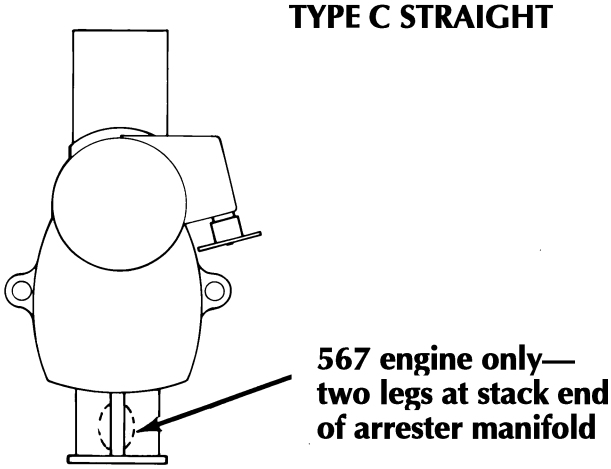

TYPE D SHORT STRAIGHT

2002 QUALIFIED LIST—LOCOMOTIVE

	MFG	MODEL NUMBER	BODY TYPE	LEG TYPE	REMARKS
1	BUR	GN7	IV	C	Unit consists of two sections combined.
2	BUR	GN8	IV	C	Two stacks near center.
3	EMD	EMD 32379	II	C	For GP-7 only. Two units, one with exhaust
		(Discontinued)	(with stack)	(with stack)	stack and one without exhaust stack make a set.
4	EMD	EMD 32379B	II	C	~
		continued	(w/o stack)		
5	EMD	EMD 32379A	II	C	For GP-7,GP-9,GP-18,GP-28 & GP-38. Two units,
		continued	(with stack)		one with exhaust stack and one without stack make a set.
6	EMD	EMD 32379AB	II	C	~
		continued	(w/o stack)		~
7	EMD	EMD 32379SDA	IV	C	For SD-7 & SD-9 with dynamic brake. Two units,
		continued	(with stack)		one with exhaust stack and one without stack, make a set.
8	EMD	EMD 32379SDAB	IV	C	~
		continued	(w/o stack)		~
9	EMD	EMD 44379	II	C	For GP-38, two units, one with exhaust stack
		continued	(with stack)		and one without stack, make a set.
10	EMD	EMD 44379B	II	C	~
		continued	(w/o stack)		~
11	EMD	EMD 8426352	I	A	Two sections form unit for half of 16
		continued	(with stack)		cylinder engine. Two stacks at opposite ends.
12	EMD	EMD 8426353	I	A	~
		continued	(w/o stack)		~
13	EMD	EMD 8426353	I	A	Two sections form unit for half of 16
		continued	(w/o stack)		cylinder engine. Two stacks at opposite ends.
14	EMD	EMD 8426354	I	A	~
		continued	(with stack)		~
15	EMD	EMD 8426353	I	A	Two sections form unit for half of 16
		continued	(w/o stack)		cylinder engine. Two stacks at opposite ends.
16	EMD	EMD 8426355	I	A	~
		continued	(with stack)		~
17	EMD	EMD 8426356	I	A	Two sections form unit for half of 12
		continued	(with stack)		cylinder engine. Two stacks at opposite ends.
18	EMD	EMD 8426356	I	A	~
		continued	(with stack)		~

2002 QUALIFIED LIST—LOCOMOTIVE

	MFG	MODEL NUMBER	BODY TYPE	LEG TYPE	REMARKS
19	EMD	EMD 9093985 continued	I (with stack)	A	Two sections form unit for half of 16 cylinder engine. Two stacks at opposite ends.
20	EMD	EMD 8426353 continued	I (w/o stack)	A	~ ~
21	EMD	EMD 9093986 continued	I (with stack)	A	Two sections form unit for half of 16 cylinder engine. Two stacks at opposite ends.
22	EMD	EMD 8426353 continued	I (w/o stack)		~ ~
23	EMD	EMD 9093983 continued	I (with stack)	A	Two sections form unit for half of 16 cylinder engine. Two stacks at opposite ends.
24	EMD	EMD 8426353 continued	I (w/o stack)	A	~ ~
25	EMD	EMD 9093984 continued	I (with stack)	A	Two sections form unit for half of 12 cylinder engine. Two stacks at opposite ends.
26	EMD	EMD 9093984 continued	I (with stack)	A	~ ~
27	EMD	EMD 9501801C continued	VI	D	For 8-645 engine -1 spark arrester unit** with 2-leg manifold connector.
28	EMD	EMD 9501801C continued	VI	D	For 16-645 engine - 2 spark arrester units** with 4-leg manifold connector.
29	EMD	EMD 9515814A	VI	D	For 12-645 engine - 2 independent spark arrester units.**
30	EMD	EMD 9530989	VI	D	For 6-567A thru 6-567C engines - 1 spark arrester unit.**
31	EMD	EMD 9530989	VI	D	For 12-567A thru 12-567C engines - 2 independent spark arrester units*
32	EMD	EMD 9531223 continued	VI	D	For 8-567A thru 8-567C engines - 1 spark arrester unit** with 2-leg manifold connector.
33	EMD	EMD 9531223 continued	VI	D	For 16-567A thru 16-567D engines - 2 spark spark arrester units** with 4 leg manifold connector.
34	FAR	C-37223***	I	C	Spark Arrester has 6 legs.
35	FAR	C-37247***	I	C	~
36	FAR	C-42317***	II	A	May not be marked with Farr No. 5
37	FAR	C-43888***	III	A	~
38	FAR	C-51994***	II	A	May not be marked with Farr No. 5
39	FAR	C-58151***	I	C	One round stack.
40	FAR	C-70899***	VII	C	Four oval stacks, manifolds are interconnected.

2002 QUALIFIED LIST—LOCOMOTIVE

	MFG	MODEL NUMBER	BODY TYPE	LEG TYPE	REMARKS
41	FAR	C-71088***	III & VII	C	Four oval stacks, one at each end and two adjacent stacks in
		continued			the center, manifolds are interconnected.
42	FAR	C-71372***	VII	C	Four oval stacks, manifolds are interconnected.
43	FAR	C-78327	VII	C	Same as C-70889, with side clean-out spark traps.
44	FAR	C-95248	I	C	Same as C-37223, except with a thicker base plate and
		continued			side clean-out spark traps, with a removable cover for trap
		continued			cleanout.
45	FAR	C-95248***	I	C	Same as C-37223 with thicker base plate and removable cover
		continued			for trap clean-out.
46	FAR	C-95248-C	I	C	Same as C-37223, with Heavy Duty side clean-out spark trap.
47	FAR	C-95248-D	I	C	Same as C-37223, with Heavy Duty side clean-out spark trap.
48	FAR	C-95248-E	I	C	Same as C-37223, with increased capacity side clean-out
		continued			trap and a thicker base plate.
49	FAR	D-35001***	II	C	~
50	FAR	D-36781***	V	C	~
51	FAR	D-37458***	I	B	~
52	FAR	D-37819***	II	B + C	~
53	FAR	D-38040***	V	B + C	~
54	FAR	D-38100***	IV	C	~
55	FAR	D-38101***	IV	B + C	~
56	FAR	D-38370***	II	C	~
57	FAR	D-40791***	I	A	~
58	FAR	D-40841***	I	A	~
59	FAR	D-41275***	III	C	~
60	FAR	D-41431***	I	A	End view looks like bent leg (waterpipe opening)
61	FAR	D-45312***	II	C	~
62	FAR	D-45313	IV	C	Side clean-out spark traps.
63	FAR	D-46091	II	C	Side clean-out spark traps.
64	FAR	D-46181	IV	C	Side clean-out spark traps.
65	FAR	D-46665***	II	A + C	~
66	FAR	D-47290***	II	C	~
67	FAR	D-47910	II	C	Side clean-out spark traps.
68	FAR	D-48747	II	A + C	Side clean-out spark traps.
69	FAR	D-49209***	I	C	~

2002 QUALIFIED LIST—LOCOMOTIVE

	MFG	MODEL NUMBER	BODY TYPE	LEG TYPE	REMARKS
70	FAR	D-50318***	II	C	~
71	FAR	D-50590	III	C	Side clean-out spark traps.
72	FAR	D-52151***	II	B	~
73	FAR	D-52179	IV	C	Side clean-out spark traps.
74	FAR	D-52190	II	C	Side clean-out spark traps.
75	FAR	D-52236***	V	C	Four oval stacks, manifolds are not interconnected.
76	FAR	D-52632	III	C	Side clean-out spark traps.
77	FAR	D-53043***	V	C	~
78	FAR	D-53104***	II	C	~
79	FAR	D-53347***	II	C	~
80	FAR	D-53355***	II	B	~
81	FAR	D-53415***	IV	C	P~
82	FAR	D-53934	II	C	Side clean-out spark traps.
83	FAR	D-54500	IV	C	Side or bottom clean-out spark traps.
84	FAR	D-54501	II	C	Side or bottom clean-out spark traps.
85	FAR	D-54502	II	C	Side or bottom clean-out spark traps.
86	FAR	D-54503	IV	C	Side or bottom clean-out spark traps.
87	FAR	D-54504	II	C	Side or bottom clean-out spark traps.
88	FAR	D-54505	IV	C	Side or bottom clean-out spark traps.
89	FAR	D-58438***	IV	C	One round stack.
90	FAR	D-59286***	IV	C	One round stack, standard EMD manifold.
91	FAR	D-62777	II	C	One oval stack, quick-opening side clean-out spark trap.
92	FAR	D-62778	IV	C	One oval stack, quick-opening side clean-out spark trap.
93	FAR	D-65800***	IV	C	One round stack, manifolds connected by a flex-joint connector.
94	FAR	D-66531***	IV	B or C	One oval stack.
95	FAR	D-66541***	IV	C	One oval stack.
96	FAR	D-69642***	III	C	Two oval stacks located in the middle, manifolds are not interconnected.
		continued			
97	FAR	D-71303***	VII	C	Four oval stacks, manifolds are interconnected.
98	FAR	D-72221***	VII	A	Four oval stacks, manifolds are interconnected.
99	FAR	D-72222***	II	A	Two rectangular stacks, manifolds are interconnected.
100	FAR	D-72687***	IV	B&C	Same as D-38101 with flex joint in place of band clamp.
101	FAR	D-72698***	III	B or C	Four oval stacks, manifolds are not interconnected.
102	FAR	D-72704***	III	B or C	Four oval stacks, manifolds are not interconnected.

2002 QUALIFIED LIST—LOCOMOTIVE

	MFG	MODEL NUMBER	BODY TYPE	LEG TYPE	REMARKS
103	FAR	D-73358***	VII	C	Approved as D-71303.
104	FAR	D-75318***	III	C	Approved as D-69642.
105	FAR	D-78348	V	C	Same as D-53043 with flex joint & bottom clean-out spark traps.
106	FAR	D-96702*** continued	II	C	Same as D-52190 with a side clean-out spark trap, a thicker mounting flange base plate and a removable cover for trap clean out.
107	FAR	D-96702 continued	II	C	Same as D-52190 with thicker base plate and removable cover for trap clean-out.
108	FAR	D-99346*** continued continued	III	C	Same as D-69642 except for increased thickness of the base plate and the distance from centerline of the stack to the manifold is reduced to 2.89 inch.
109	FAR	D-99346*** continued	III	C	Same as D-69642 with thicker base plate and a reduced distance from centerline of the stack to the end of manifold.
110	FAR	D-111513 continued continued	III	C	Same as D-69642 with an increased capacity side clean-out trap, a thicker base plate and a removable cover for trap clean-out.
111	FAR	D-111513*** continued	III	C	Same as D-69642 with thicker base plate and removable cover for trap clean-out.
112	FAR	D-111639 continued	III	C	Same as D-69642 with removable cover for trap clean-out, and reduced distance from the stack centerline to the manifold.
113	FAR	D-111639*** continued continued	III	C	Same as D-69642 with removable cover for trap clean-out and a reduced distance from the stack centerline to the end of the manifold.
114	FAR	D-116089 continued	III	C	Same as D-69642 with removable cover for trap clean-out on opposite sides of the manifolds.
115	FAR	D-116089*** continued	III	C	Same as D-69642 with removable cover for trap clean-out on opposite sides of the manifolds.
116	HAR	HAPCO 7 AB*	External	N/A	Single inlet fits on exhaust stack.
117	HAR	HAPCO 7 AC 1* continued	External	N/A	Single inlet fits on exhaust stack with a Horizontal or Vertical application.
118	HAR	HAPCO 8 AB*	External	N/A	Single inlet fits on exhaust stack.
119	HAR	HAPCO 10 AB*	External	N/A	Single inlet fits on exhaust stack.
120	HAR	HAPCO 12 AB*	External	N/A	Single inlet fits on exhaust stack.
121	HAR	HAPCO 12 AC12LP*	External	N/A	Single inlet, fits on a round or oval exhaust stack.
122	HAR	HAPCO 12 AC12LP-1*	External	N/A	Single inlet, fits on a round or oval exhaust stack.

2002 QUALIFIED LIST—LOCOMOTIVE

	MFG	MODEL NUMBER	BODY TYPE	LEG TYPE	REMARKS
123	PEN	C-466143-C	II	C	For EMD GP-9, RR class ERS 17.
124	SPR	PT1	III	B	For GP-9 (Discontinued model).
125	SPR	PT 11	I	B	For SD-9 (Discontinued model).

A description of the terms used in the Locomotive Spark Arrester Update table follows:

MFG — *Manufacturer*

FAR — *Farr Company—Model 5 Locomotive Spark Arresters; Not all Farr Model 5 exhaust devices are qualified Locomotive Spark Arresters, only the Farr Model 5 model numbers listed on this qualified list.*

Footnotes—

* = *Harco series are external spark arresters designed to be installed on standard locomotive manifold stacks. The back pressure of an external arrester is additive to that of the manifold. Users of external arresters should measure maximum manifold leg backpressure with the arrester installed to make certain it does not exceed the 3 1/2 inches of mercury backpressure limit, specified by the AAR Recommended Practice RP-557, "Spark Arresters For Non-Turbocharged Diesel Engines in Railroad Locomotives."*

** = *Spark arrester has 6 legs.*

*** = *All have bottom spark trap clean-outs.*

2002 LOCOMOTIVE-TYPE SPARK ARRESTERS MANUFACTURERS LIST

BUR = BURLINGTON NORTHERN, INC., Great Northern Railway

EMD = ELECTRO-MOTIVE DIVISION, General Motors

FAR = HARCO MANUFACTURING COMPANY

PEN = PENN CENTRAL TRANSPORTATION CO.

SPR = SOUTHERN PACIFIC RAILROAD

HELPFUL HINTS

REMEMBER*:* The **RULE OF THREE** applies to Locomotive arresters, as well as General Purpose arresters. An approved arrester must have all of the following:

1. A manufacturer brand name/trademark.

2. A spark arrester model number.

3. A cleanout.

SUGGESTIONS

- If it is a turbo-charged locomotive, inspect the eductor tubes.

- If the locomotive is muffler equipped, the eductor must be removed for inspection.

- If not turbo-charged, then it has to have a spark arrester. There are less than a dozen brands of locomotive spark arresters in common use.

CHECK LIST

1. Has the locomotive been *BLUE FLAGGED** for safety while you conduct the inspection?

2 Make sure everyone who could move the locomotive knows you are conducting an inspection.

3. Always face the locomotive when climbing on or off the equipment.

4. A witness is very helpful when encountering violations.

5. Use a piece of chalk to write the locomotive number on the stack for documentation when taking photographs.

*Association of American Railroads requirement.